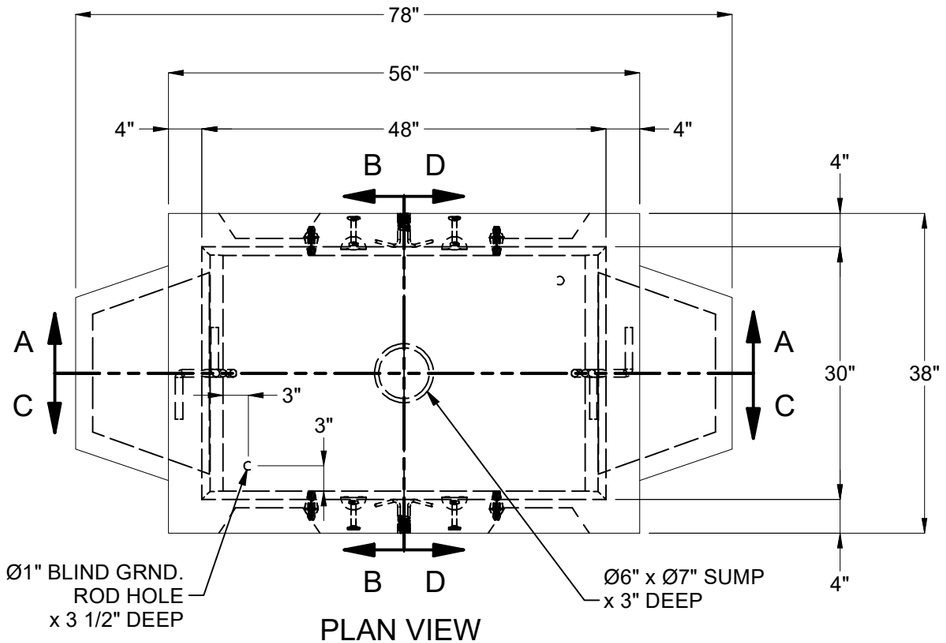

PLAN VIEW

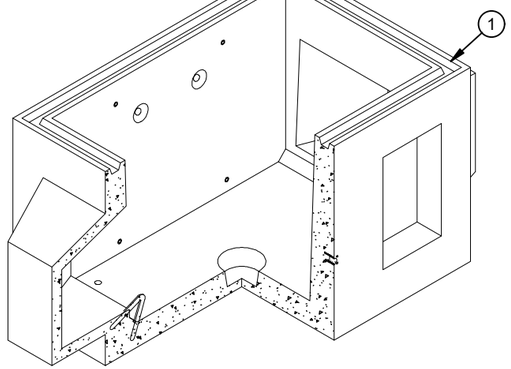

ISO VIEW

BILL OF MATERIALS

ITEM	UNIT QTY	QTY	PART NUMBER	DESCRIPTION
1	17.814 ft^3	17.814 ft^3	100006028	CONCRETE 5500 PSI #17 SCC LADWP
2	1	4	100002867	ANCHOR DOGBONE P52 2T X 3-3/8" GALV
3	1	2	100002801	INSERT COIL THIN SLAB 4LEG 1 X 4 GALV CX-24
4	1	8	100012720	INSERT PLASTIC W/ BREAK OFF SNAP 0.5IN
5	1	2	100003026	PULL IRON OFFSET .875DIA 6H X 5W X 10.875L GALV
6	1	1	300154208	REINFORCING MAT 300154208

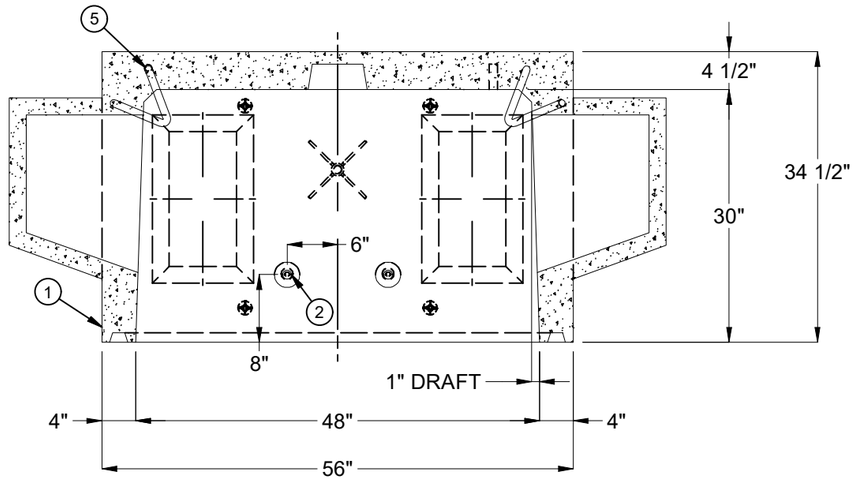

SECTION A-A

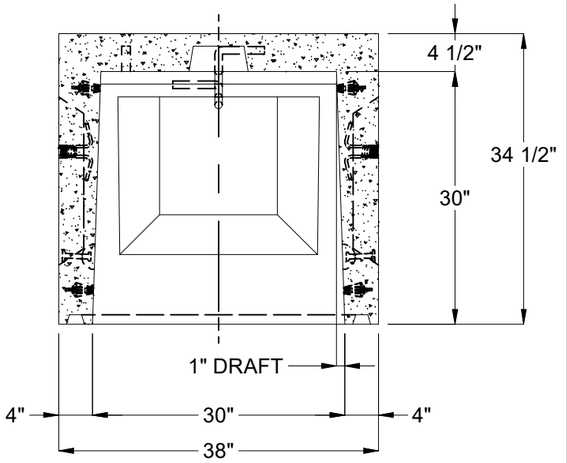

SECTION B-B

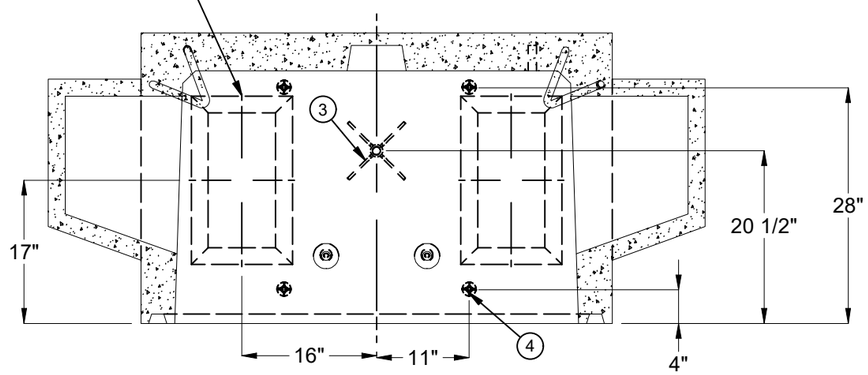

SECTION C-C

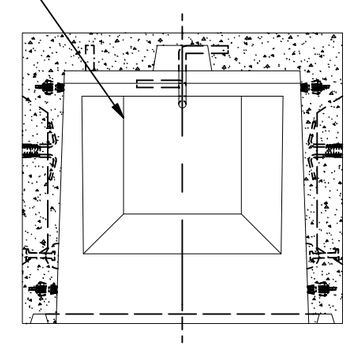

SECTION D-D

NOTES
■ ALL PARTS TO BE STENCILED: MFG DATE / JOB NUMBER / PRODUCT ID / WEIGHT.
■ CONCRETE MIX USED IN POURING THIS PRODUCT SHALL USE FLY ASH AND DCI AS AN ADMIXTURE.

LIFTING NOTES
■ DEMOLDING: THIS CONCRETE PRODUCT IS DESIGNED TO BE LIFTED AT 2,500 PSI WITH 2 LIFT CONNECTIONS EQUALLY LOADED TO 2 LIFTING POINTS AT A MINIMUM 60° SLING ANGLE, MEASURED FROM HORIZONTAL.
■ INSTALLATION: THIS CONCRETE PRODUCT IS DESIGNED TO BE LIFTED AT 5,500 PSI WITH 4 LIFT CONNECTIONS EQUALLY LOADED TO 4 LIFTING POINTS AT A MINIMUM 60° SLING ANGLE, MEASURED FROM HORIZONTAL.

BURY DEPTH:	0.5' - 0.5' to Top		
WATER LEVEL:	3.0'	APPROX. WEIGHT:	2682.15 Lbs
DESIGN SPEC:	ACI 318,ASTM C857	LOADING SPEC:	A-16 (AASHTO HS20-44)
REINFORCEMENT TYPE:	Rebar	LIFTING TYPE:	Dogbone

JENSEN PRECAST EST. 1968

WWW.JENSENPRECAST.COM

©2023 Jensen Precast- All rights reserved.
All materials appearing as Jensen Precast documents and the like are proprietary work product and are protected under U.S. copyright and other laws.
Unless in conjunction with business conducted with Jensen Precast, any use of Jensen Precast work product without express, written consent is prohibited, and recipient is prohibited from distributing any and all work product to non-approved third parties under penalty of civil action.

REVISION HISTORY			
REV	DESCRIPTION	DATE	APPROVED
B-2	INVENTOR RELEASE	11/28/2023	

DESCRIPTION:	Vault 3048x30 Rect. Bottom Section Ducted LADWP E-491 G-2, R14 CASTING LAYOUT		REV: B-1
PART NUMBER:	100003500	DRAWN BY:	R. Ramos
CREATED:	8/1/2019	MODIFIED:	11/28/2023
			SHEET: 1 OF 1

100003500.idw