NOTES
■ FOR COMPLETE DESIGN AND PRODUCT INFORMATION CONTACT JENSEN PRECAST.

BILL OF MATERIALS

ITEM	UNIT QTY	QTY	PART NUMBER	DESCRIPTION
1	20.374 ft^3	20.374 ft^3	100011425	CONCRETE MIX GENERIC 5000 PSI
2	1	4	100004878	ANCHOR UTILITY .671DIA 5-SLAB GALV P75 5UA671
3	1	4	100002867	ANCHOR DOGBONE P52 2T X 3-3/8" GALV
4	1	1	100018559	REINFORCING MAT 100018559

100002542.idw

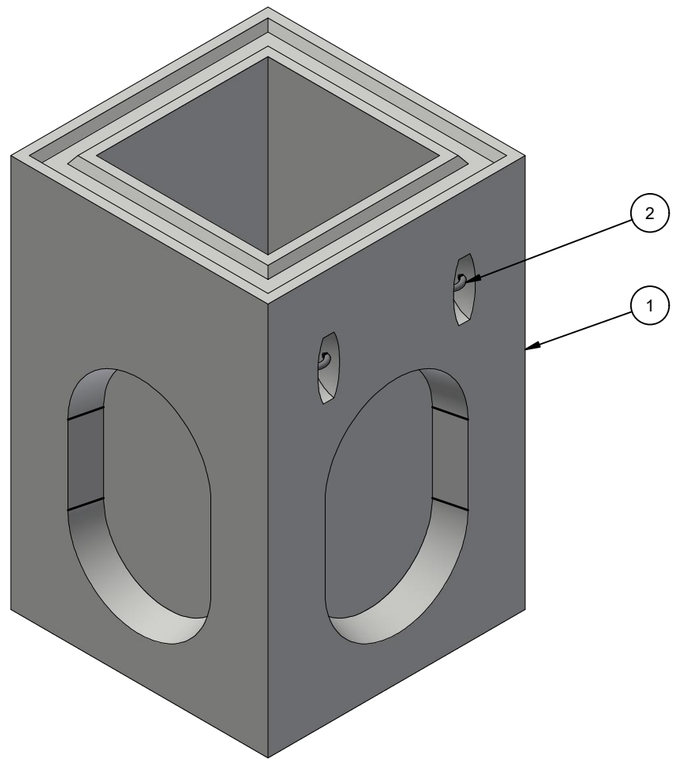

ISO

LIFTING NOTES
■ THIS CONCRETE PRODUCT IS DESIGNED TO BE LIFTED AT 2500 PSI WITH 4 LIFT CONNECTIONS EQUALLY LOADED TO 2 LIFTING POINTS AT A MINIMUM 60° SLING ANGLE, MEASURED FROM HORIZONTAL.

BURY DEPTH:	0.0' - 5.0' to Top		
WATER LEVEL:	5.0'	APPROX. WEIGHT:	3067.36 Lbs
DESIGN SPEC:	ACI 318,ASTM C890	LOADING SPEC:	A-16 (AASHTO HS20-44)
REINFORCEMENT TYPE:	Rebar	LIFTING TYPE:	A-Anchor

JENSEN PRECAST EST. 1968

WWW.JENSENPRECAST.COM

©2023 Jensen Precast- All rights reserved.
All materials appearing as Jensen Precast documents and the like are proprietary work product and are protected under U.S. copyright and other laws.
Unless in conjunction with business conducted with Jensen Precast, any use of Jensen Precast work product without express, written consent is prohibited, and recipient is prohibited from distributing any and all work product to non-approved third parties under penalty of civil action.

CHANGE HISTORY

NO.	DESCRIPTION	DATE	BY
1	2306-55518	9/19/2023	JW

DESCRIPTION: Drainage 2424x48 Rect. Bottom Section Knockout Maricopa Assoc 537

CASTING LAYOUT

REV: A-1

PART NUMBER:	100002542	DRAWN BY:	J. Warren
CREATED:	5/29/2019	MODIFIED:	9/19/2023

SHEET: 1 OF 2

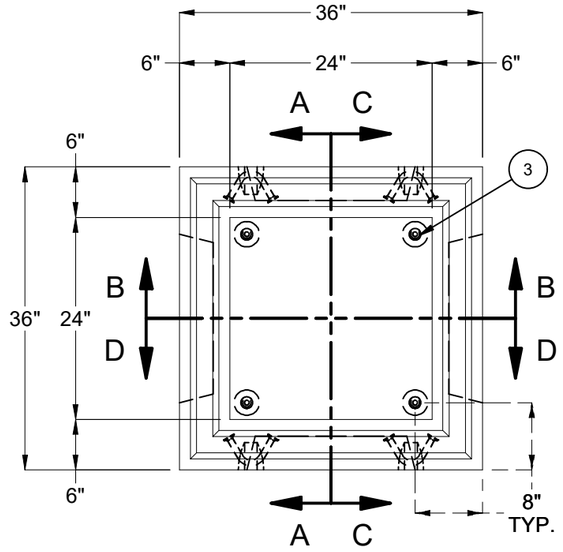

PLAN VIEW

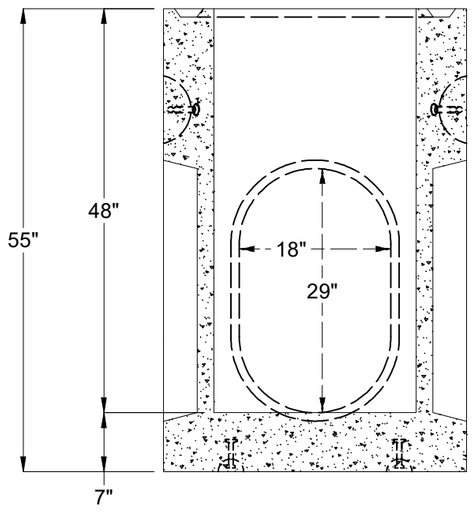

SECTION A-A

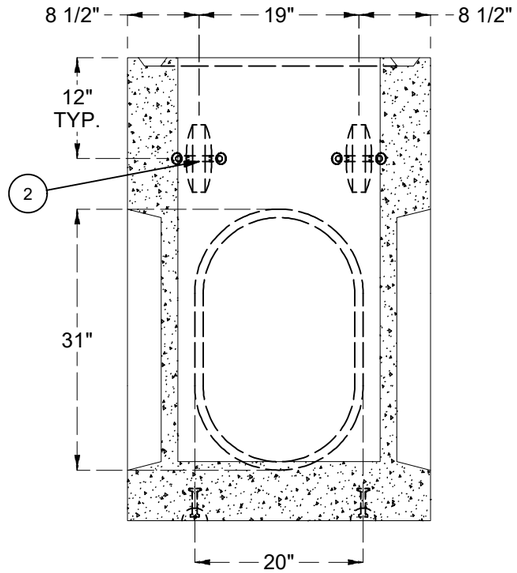

SECTION B-B

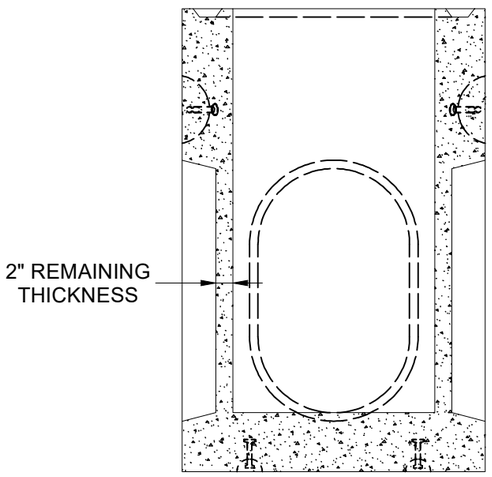

SECTION C-C

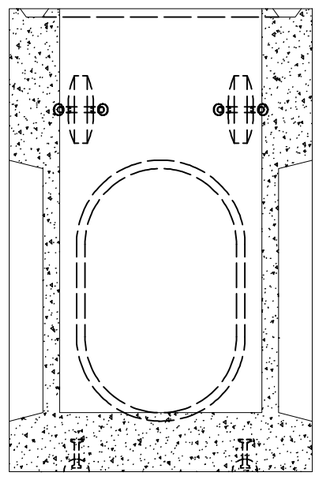

SECTION D-D

BURY DEPTH:	0.0' - 5.0' to Top		
WATER LEVEL:	5.0'	APPROX. WEIGHT:	3067.36 Lbs
DESIGN SPEC:	ACI 318,ASTM C890	LOADING SPEC:	A-16 (AASHTO HS20-44)
REINFORCEMENT TYPE:	Rebar	LIFTING TYPE:	A-Anchor

JENSEN PRECAST EST. 1968

WWW.JENSENPRECAST.COM

©2023 Jensen Precast- All rights reserved.
All materials appearing as Jensen Precast documents and the like are proprietary work product and are protected under U.S. copyright and other laws.
Unless in conjunction with business conducted with Jensen Precast, any use of Jensen Precast work product without express, written consent is prohibited, and recipient is prohibited from distributing any and all work product to non-approved third parties under penalty of civil action.

DESCRIPTION:	Drainage 2424x48 Rect. Bottom Section Knockout Maricopa Assoc 537 CASTING DRAWING		REV: A-1
PART NUMBER:	100002542	DRAWN BY:	J. Warren
CREATED:	5/29/2019	MODIFIED:	9/19/2023
			SHEET: 2 OF 2

100002542.idw