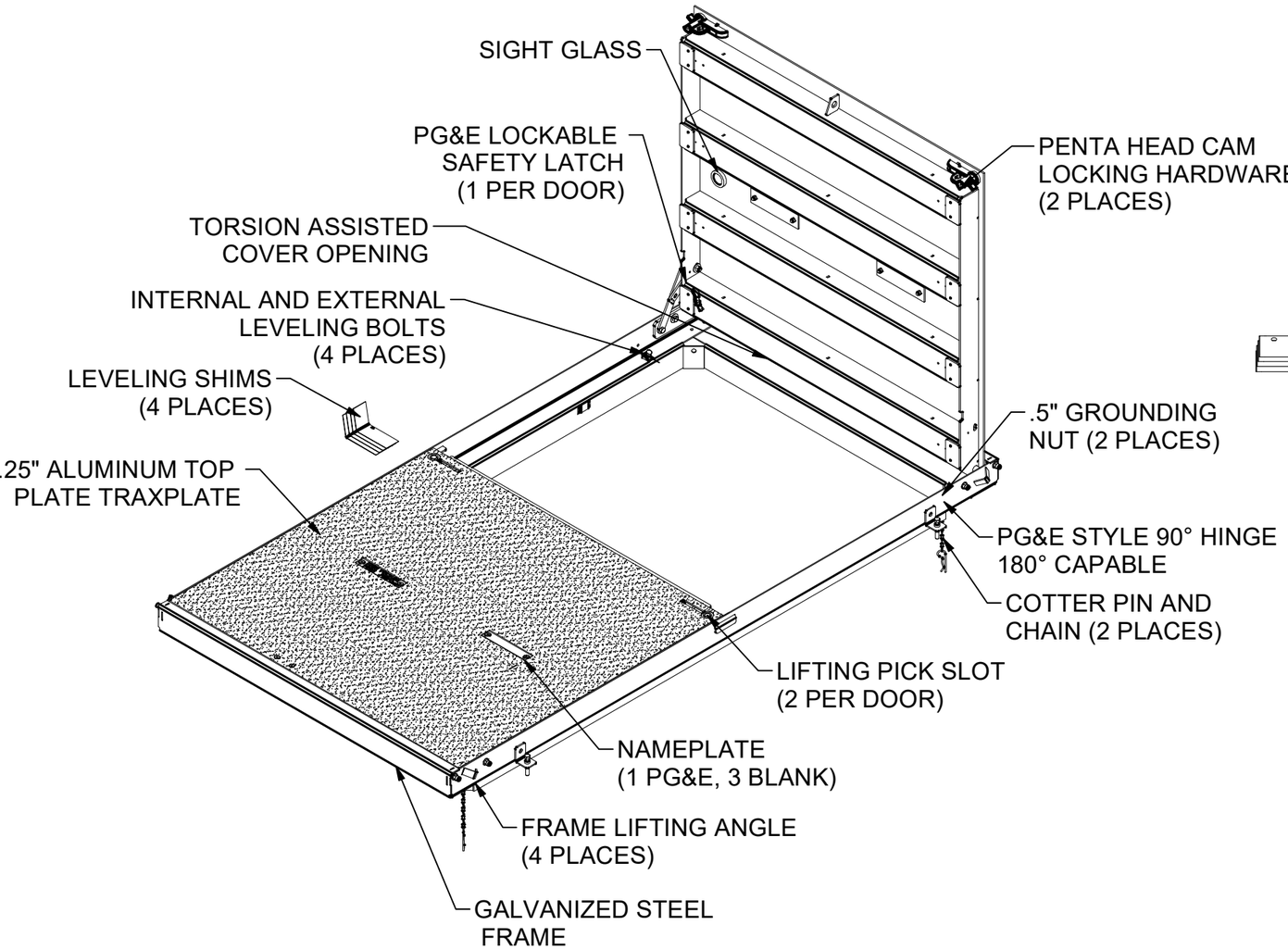

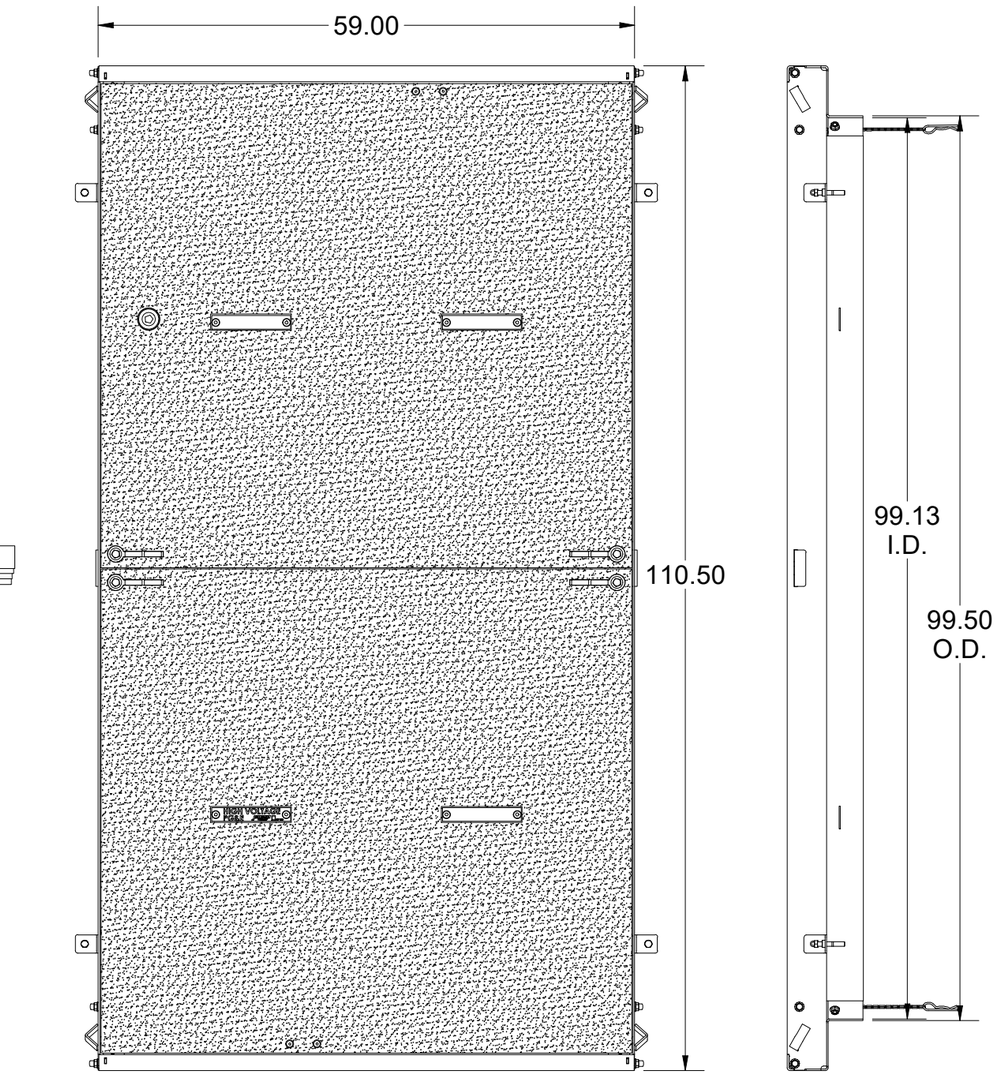

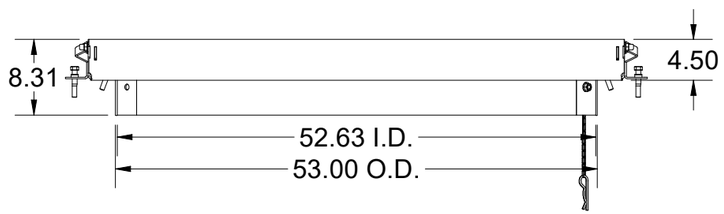

200066808.idw

ASTM C1802: Level 03

8,000 lb load on 10" x 10" footprint, without impact restricted to parking spaces accessible only to passenger vehicles and protected areas within close proximity of roadways.

SURFACE:	TraxPlate™	FINISH:	Galvanized
WEIGHT:	529.22 lbs	MARKING:	As Noted

JENSEN METALTECH
450 E. GLENDALE AVE. SPARKS. NV 89431
775-352-2716 FAX: 755-358-8127
JENSENMETALTECH.COM

©2022 Jensen Precast- All rights reserved. All materials appearing as Jensen Precast documents and the like are proprietary work product and are protected under U.S. copyright and other laws.
Unless in conjunction with business conducted with Jensen Precast, any use of Jensen Precast work product without express, written consent is prohibited, and recipient is prohibited from distributing any and all work product to non-approved third parties under penalty of civil action.

DESCRIPTION: CAB2-54102-AH3-TRX-G-SG-SAC-PG&E-OH08-SPLICE

54x102 Cover Assembly (ASTM Load Level 03, 2 Door, Bi-Metal, Hinged, TraxPlate™, Galvanized , Sight Glass , PG&E) OH 08 SPLICE

PART NUMBER:	100002425	DRAWN BY:	CNATION
CREATED:	5/1/2018	MODIFIED:	7/19/2022

REV: D-1

SHEET: 1

BILL OF MATERIALS

ITEM	UNIT QTY	QTY	PART NUMBER	DESCRIPTION
1	1	1	200032863	DAA2-B-54102-H3-TRX-R-SAC-PG&E-SPLICE
2	1	1	200032864	DAA2-T-54102-H3-TRX-R-SG-SAC-PG&E-SPLICE
3	1	1	200032865	FAS-54102-AH3-R-SAC-PG&E-OH08-SPLICE
4	1	4	100003484	BOLT HEX 1/2-13 UNC 0.75 ZINC
5	1	4	100003823	BOLT HEX 1/2-13 UNC 1.5 ZINC
6	1	4	100005059	BOLT HEX 1/2-13 UNC 2.5 ZINC
7	1	4	100007744	BOLT HEX 1/2-13 UNC 3 ZINC
8	1	8	100007733	BOLT SOCKET FLAT COUNTERSUNK HEAD - 1/2-13 UNC - 1.00 - GR 5 - ZINC
9	1	4	100007873	BOLT HEX SOCKET HEAD CAP SCREW 3/8-16 UNC 1-1/4 PLATED
10	1	4	100007870	BOLT SOCKET FLAT COUNTERSUNK HEAD - 3/8-16 UNC - 1.25 - 316SS
11	1	4	100007741	BOLT PENTA 1/2-13 UNC 0.875 HEAD 2.75L SS DRILLED
12	1	5	100007869	BOLT SHCS 1/2-13 X 1-3/4 SS
13	1	9	100007939	CAP VINYL .467 X 1/2
14	1	2	100007769	CHAIN SAFETY W/WASHER
16	1	4	100007918	COTTER PIN 0.094DIA X 1-1/4
17	1	4	100007491	HEX NUT 3/8-16 UNC ZINC-PLATED
18	1	2	100007492	HEX NUT NYLOCK 1/2-13 GR-5 ZINC-PLATED
19	1	4	100007729	HEX NUT SLOTTED CASTLE HEAD 1/2-13 SS
20	1	2	100032156	HINGE ASSY .562 PGE LEFT
21	1	2	100032153	HINGE ASSY PGE RIGHT
22	1	2	100007924	LANYARD 3/64 W/PIN COATED SS
23	1	4	100005056	LEVELING BOLT 9.5 SHIM PLATE
24	1	1	100005058	NAME PLATE CAST ALUM PG&E - HIGH VOLTAGE
25	1	3	100007562	NAME PLATE PLEXI PG&E
26	1	4	100007857	NUT FINGER 1/2-13 BRASS
27	1	16	100007925	PAD INSULATING POLYURETHANE LARGE 4.00 X 2.75
28	1	2	100007640	PG&E SAFETY LATCH ASSY
29	1	32	100007884	RIVET GRIP 3/16 X 7/16 ALUM DOME HD
30	1	2	100007882	RIVET GRIP STEEL 3/16 X 7/16 LRG HD
31	1	4	100007859	RIVET NUT 3/8-16 FLAT KNURLED
32	1	1	100007928	SIGHT GLASS
33	1	4	100007915	SPRING COMPRESSION 055 X 5/8 X 7/8 LONG
34	1	2	100007718	SPRING MOUNT FOR 54102 SPLICE & XFMR
35	1	2	100007896	TORSION HEX ROD 9/16 X 36 RAW
36	1	8	100011418	WASHER FLAT 1/2 X 1 3/8 USS TYPE A ZINC
37	1	10	100026256	LOW-STRENGTH STEEL FLANGE NUT, 1/2" - 13 THREAD SIZE

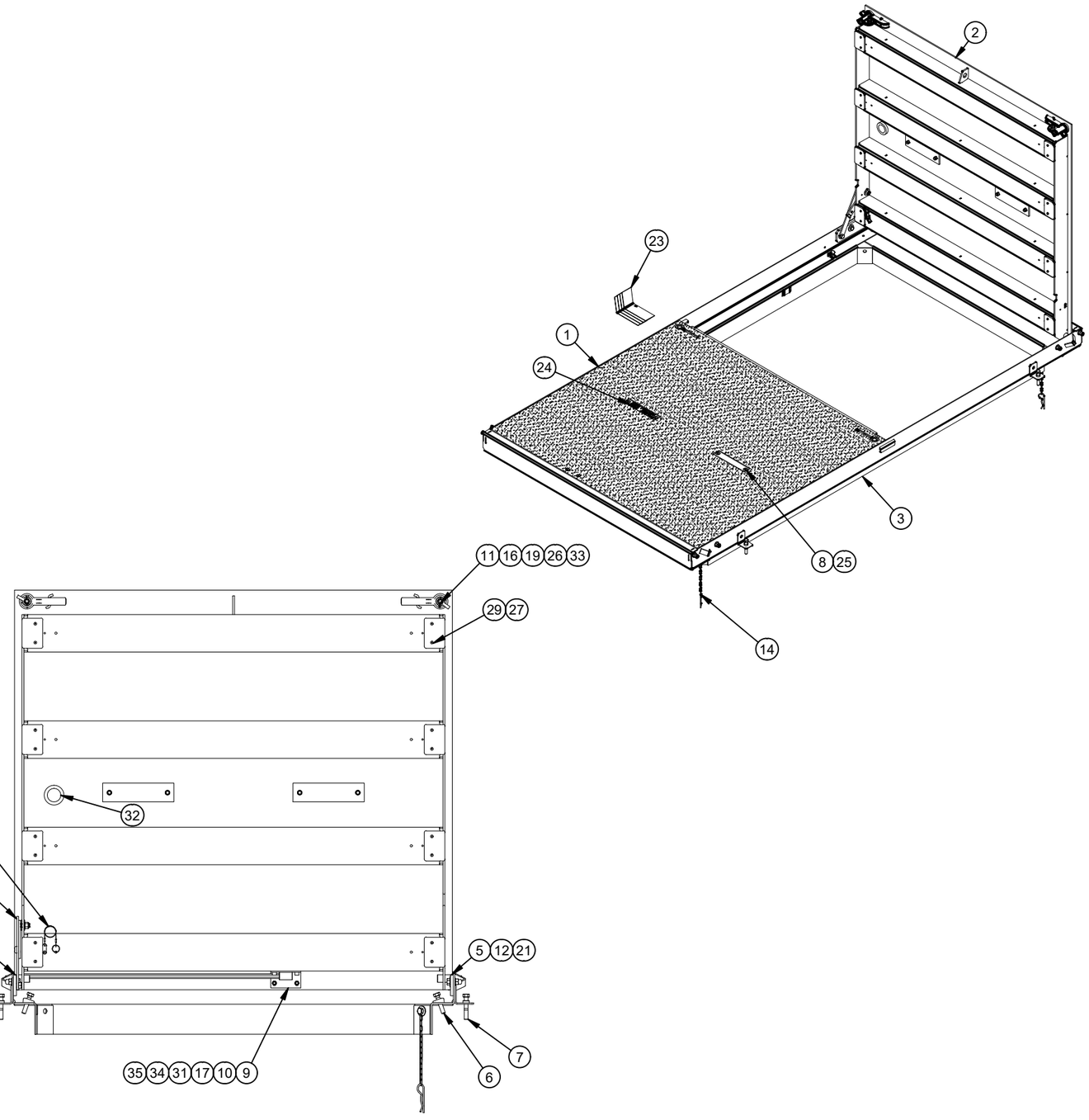

200066808.idw

MATERIAL FINISH: Galvanized	JENSEN METALTECH 450 E. GLENDALE AVE. SPARKS. NV 89431 775-352-2716 FAX: 755-358-8127 *JENSENMETALTECH.COM*	©2022 Jensen Precast- All rights reserved. All materials appearing as Jensen Precast documents and the like are proprietary work product and are protected under U.S. copyright and other laws. Unless in conjunction with business conducted with Jensen Precast, any use of Jensen Precast work product without express, written consent is prohibited, and recipient is prohibited from distributing any and all work product to non-approved third parties under penalty of civil action.	PART NUMBER & DESCRIPTION: 100002425 CAB2-54102-AH3-TRX-G-SG-SAC-PG&E-OH08-SPLICE WEIGHT: 529.22 Lbs DRAWN BY: CNATION CREATED: 5/1/2018 MODIFIED: 7/19/2022	REV: D-1 SHEET: 2
MATERIAL SURFACE: TraxPlate™				

BURN LIST - BOM

QTY	PART NUMBER	DESCRIPTION	STOCK NUMBER	MATERIAL	MASS
8	100040780	MCM 97358A109-Low-Profile Flat Head Solid Rivets-0.186" Diameter, for 0.282" Maximum Material Thickness		Generic	0.000 kg
2	200032866	Frame Component Steel Frame End, Cast In	100007734	STL ASTM A36 SM-HRPO 60X120 RAW .1875	44.808 lbmass
2	200032867	Frame Component Steel Frame Side, Adjustable	100007734	STL ASTM A36 SM-HRPO 60X120 RAW .1875	61.559 lbmass

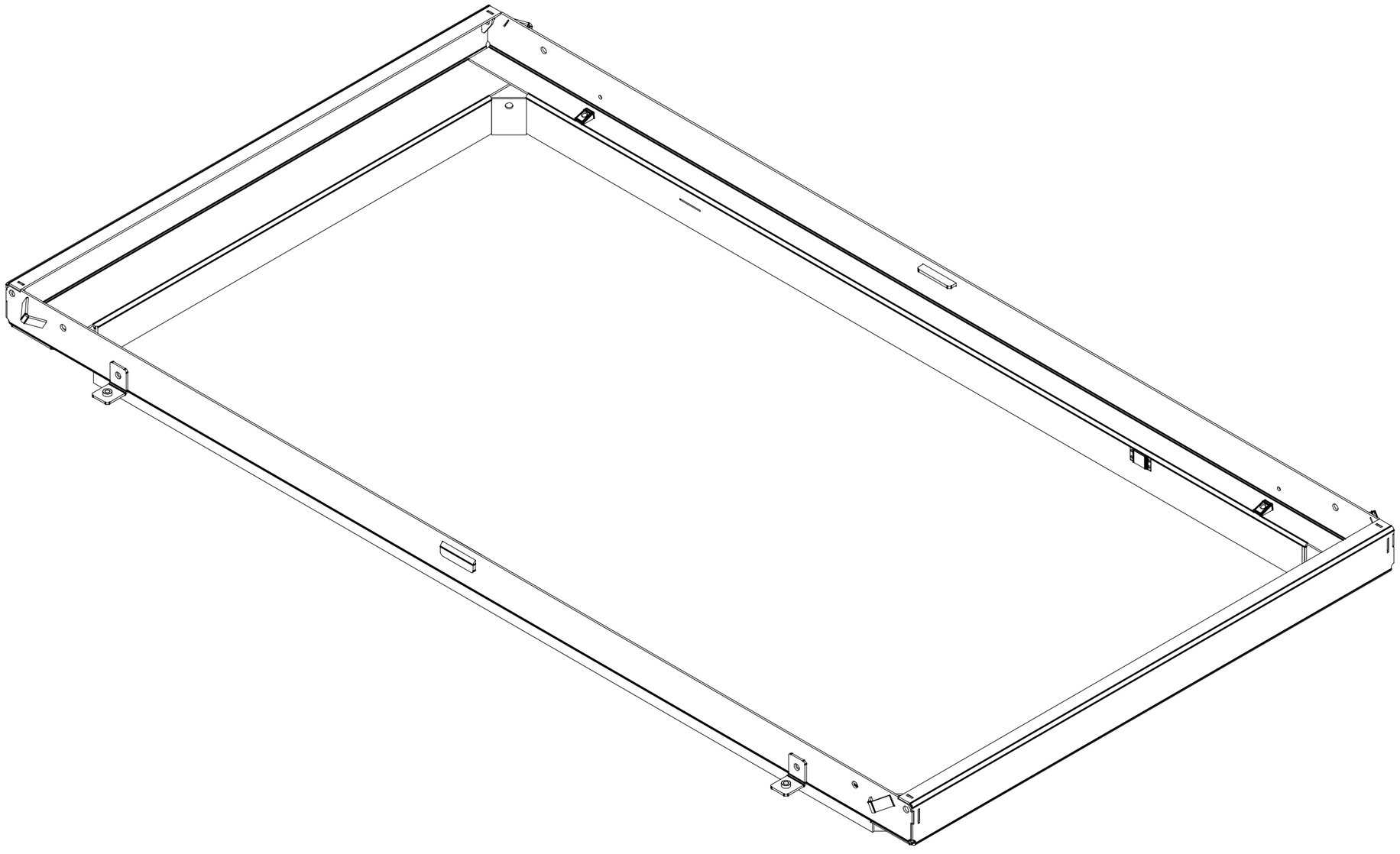

200066808.idw

MATERIAL FINISH: Raw

MATERIAL SURFACE: Smooth

JENSEN METALTECH
450 E. GLENDALE AVE. SPARKS. NV 89431
775-352-2716 FAX: 755-358-8127
JENSENMETALTECH.COM

©2022 Jensen Precast- All rights reserved.
All materials appearing as Jensen Precast documents and the like are proprietary work product and are protected under U.S. copyright and other laws.
Unless in conjunction with business conducted with Jensen Precast, any use of Jensen Precast work product without express, written consent is prohibited, and recipient is prohibited from distributing any and all work product to non-approved third parties under penalty of civil action.

PART NUMBER & DESCRIPTION: 200066053 FAS-54102-AH5-R-SAC-PG&E-OH08-SPLICE

REV:

WEIGHT: 218.73 Lbs

DRAWN BY: CNATION

CREATED: 4/17/2018

MODIFIED: 7/19/2022

SHEET: 3

BILL OF MATERIALS

ITEM	UNIT QTY	QTY	PART NUMBER	DESCRIPTION
1	1	1	200066061	Door Component Steel Plate, Bottom Nameplate
2	1	2	200066057	Door Component Aluminum Side Bar
3	1	4	200066059	Door Component Aluminum Channel
4	1	2	200033796	PG&E NAME PLATE BACKING PLATE - ALUM
5	1	4	100007864	NUT 1/2-13 WELDABLE ALUM
6	1	4	200029182	Door Component Aluminum Lifting Tab
7	1	1	200066062	Door Component Aluminum Lap Bar
8	1	2	100007934	CAST-ING TOWER PICK HOLE COMBO ALUM
9	1	2	100007916	CLIP PICK HOLE SS

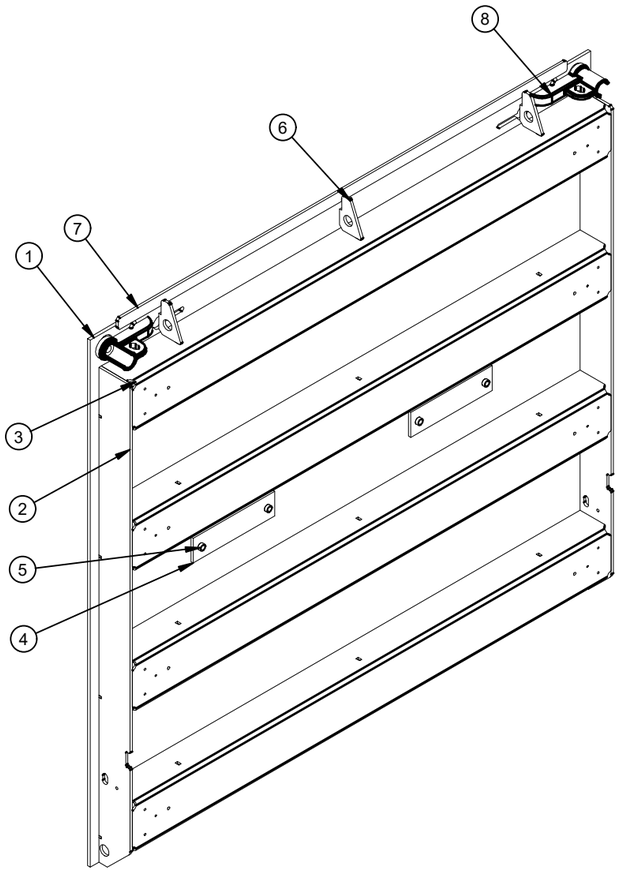

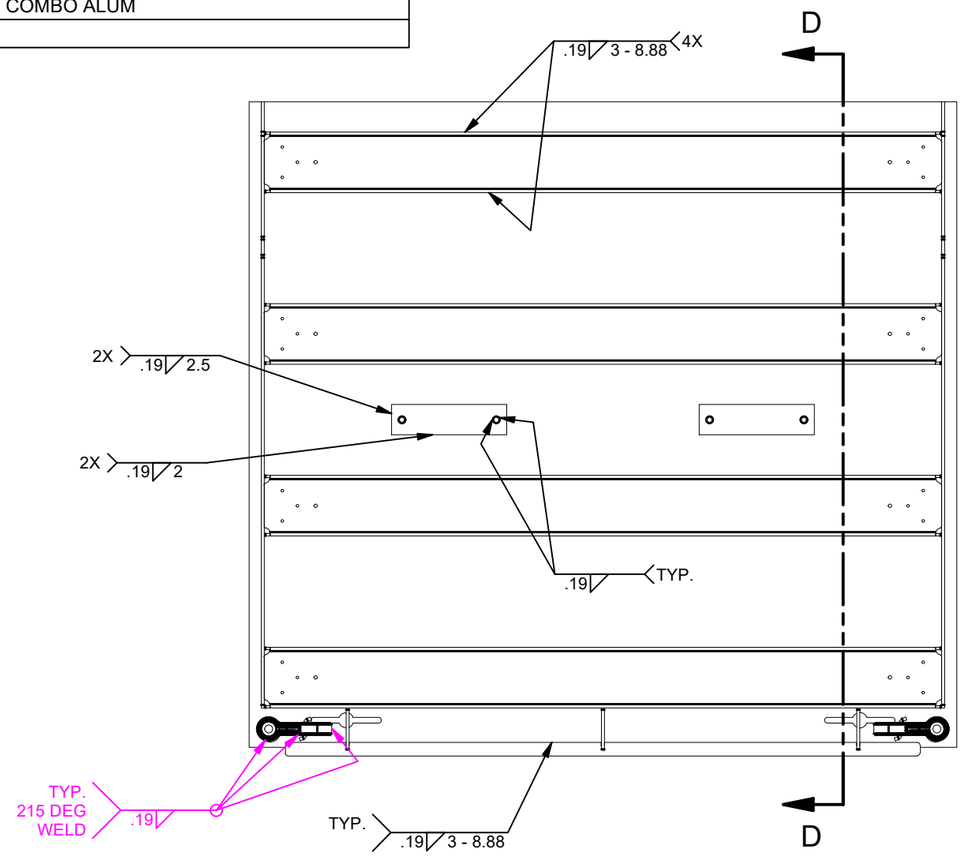

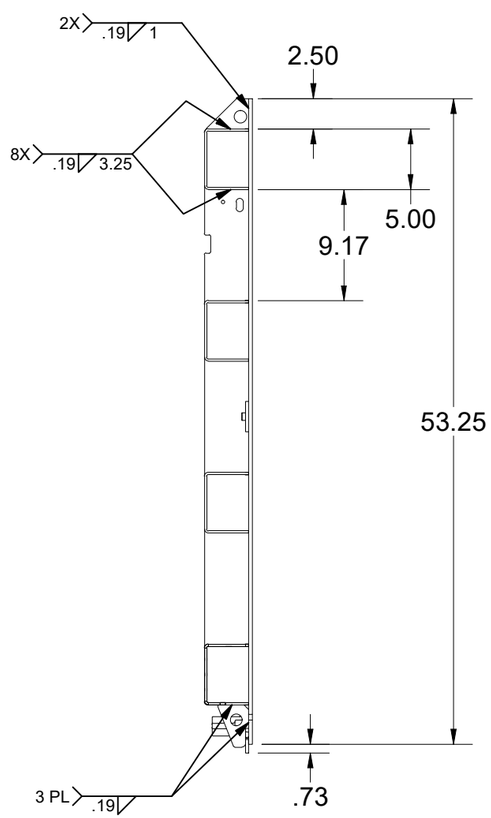

SECTION D-D

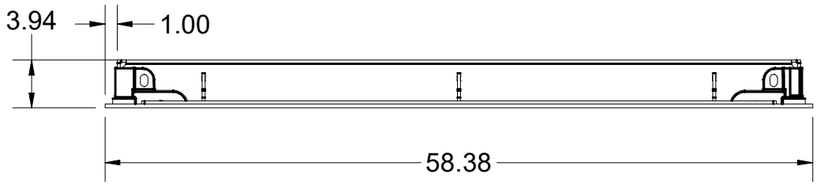

200066808.idw

MATERIAL FINISH: Raw	JENSEN METALTECH 450 E. GLENDALE AVE. SPARKS. NV 89431 775-352-2716 FAX: 755-358-8127 *JENSENMETALTECH.COM*	©2022 Jensen Precast- All rights reserved. All materials appearing as Jensen Precast documents and the like are proprietary work product and are protected under U.S. copyright and other laws. Unless in conjunction with business conducted with Jensen Precast, any use of Jensen Precast work product without express, written consent is prohibited, and recipient is prohibited from distributing any and all work product to non-approved third parties under penalty of civil action.	PART NUMBER & DESCRIPTION: 200066060 DAA2-B-54102-H3-TRX-R-SAC-PG&E-SPLICE REV:
MATERIAL SURFACE: TraxPlate™			WEIGHT: 335 Lbs DRAWN BY: CNATION CREATED: 4/23/2018 MODIFIED: 7/19/2022 SHEET: 4

BILL OF MATERIALS

ITEM	UNIT QTY	QTY	PART NUMBER	DESCRIPTION
1	1	1	200066058	Door Component Aluminum Plate, Top Nameplate
2	1	2	200066057	Door Component Aluminum Side Bar
3	1	4	200066059	Door Component Aluminum Channel
4	1	1	200029173	ANGLE GUSSET
5	1	2	200033796	PG&E NAME PLATE BACKING PLATE - ALUM
6	1	4	100007864	NUT 1/2-13 WELDABLE ALUM
7	1	1	100007929	SIGHT GLASS BUSHING ALUM
8	1	2	100007934	CAST-ING TOWER PICK HOLE COMBO ALUM
9	1	2	100007916	CLIP PICK HOLE SS

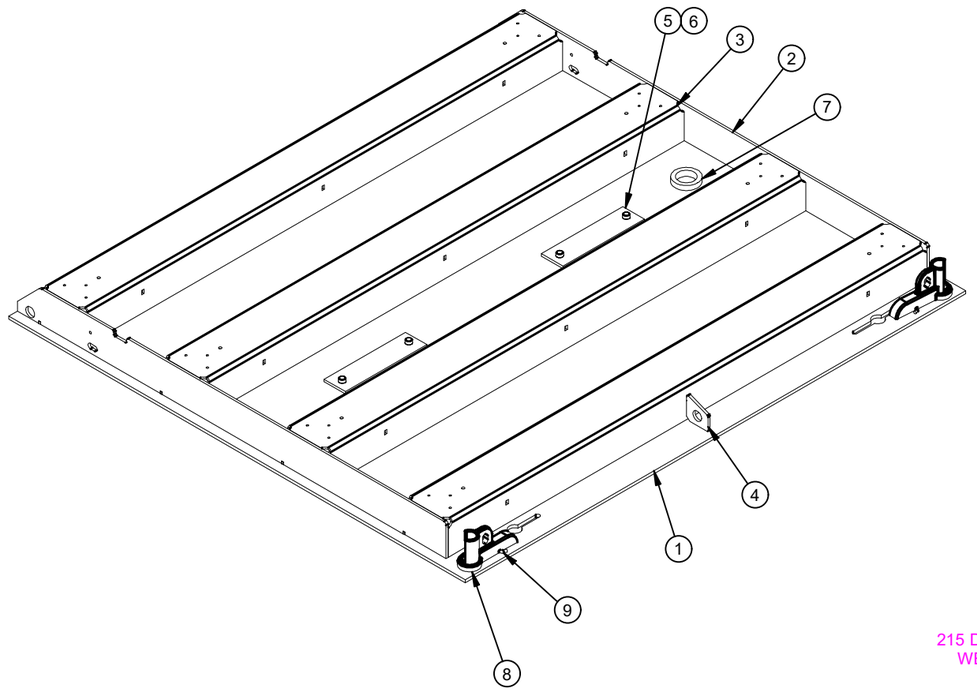

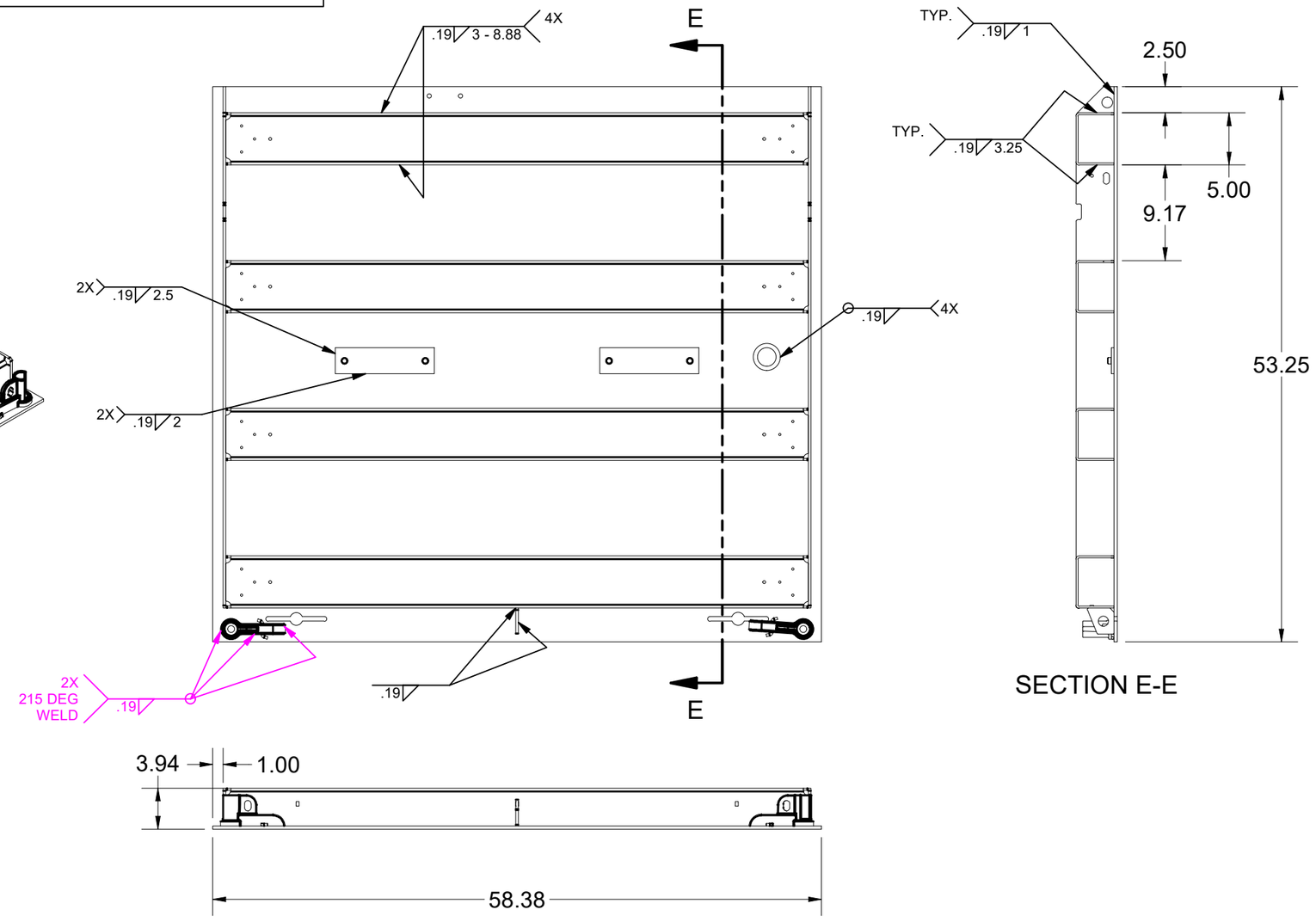

200066808.idw

MATERIAL FINISH: Raw	JENSEN METALTECH 450 E. GLENDALE AVE. SPARKS. NV 89431 775-352-2716 FAX: 755-358-8127 *JENSENMETALTECH.COM*	©2022 Jensen Precast- All rights reserved. All materials appearing as Jensen Precast documents and the like are proprietary work product and are protected under U.S. copyright and other laws. Unless in conjunction with business conducted with Jensen Precast, any use of Jensen Precast work product without express, written consent is prohibited, and recipient is prohibited from distributing any and all work product to non-approved third parties under penalty of civil action.	PART NUMBER & DESCRIPTION: 200066056 DAA2-T-54102-H3-TRX-R-SG-SAC-PG&E-SPLICE
MATERIAL SURFACE: TraxPlate™			WEIGHT: 332.81 Lbs CREATED: 4/23/2018 DRAWN BY: CNATION MODIFIED: 7/19/2022

REV:

SHEET: 5

BILL OF MATERIALS

ITEM	UNIT QTY	QTY	PART NUMBER	DESCRIPTION
1	1	2	200066054	Frame Component Steel Frame Side, Adjustable
2	1	2	200066055	Frame Component Steel Frame End, Cast In
3	1	4	200018691	FRAME BOLT DOUBLER SLOT
4	1	4	200033136	PG&E FRAME CORNER 4" SKIRT
5	1	1	100007700	BRACKET INNER NAMEPLATE
6	1	4	100007695	FRAME LEVELING ANGLE
7	1	4	100007863	NUT LEVELER 1/2-13 WELDABLE CAST STEEL
8	1	4	100007641	FRAME LIFTING BRACKET
9	1	2	100007636	FRAME LATCH ANGLE - A36 - 4IN LONG
10	1	4	100007728	NUT SELF-CLINCH 1/2-13 S-0813-1 RAW

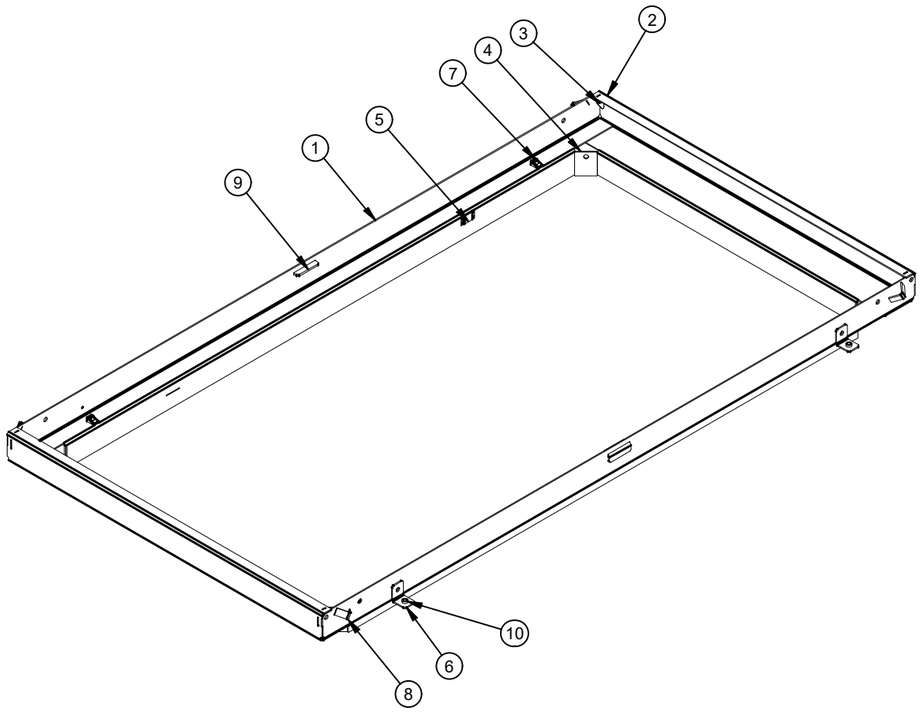

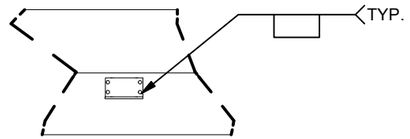

SECTION C-C

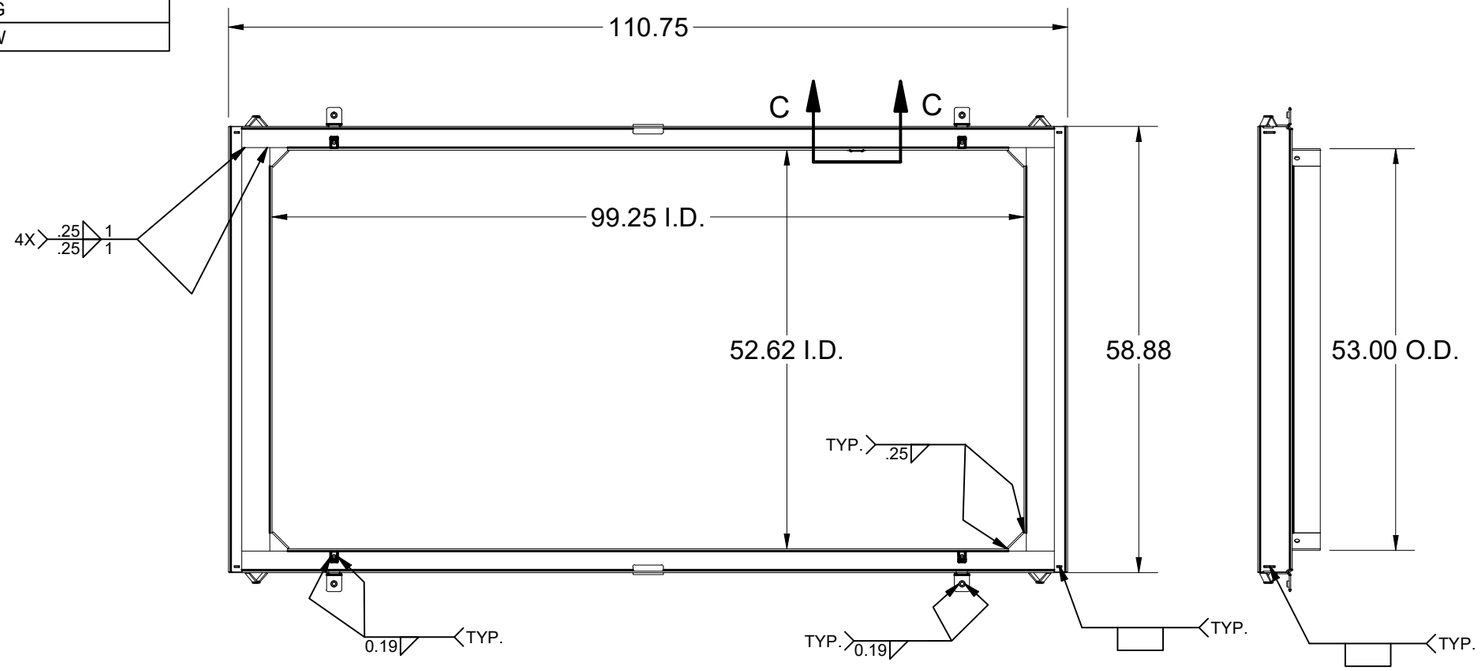

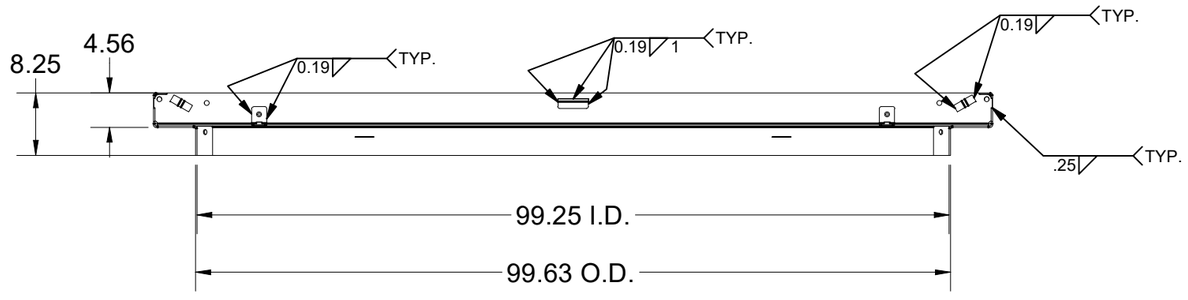

ASTM C1802: Level 05

16,000 lb load on 10" x 20" footprint, with 30% impact restricted to unrestricted parking lanes and alleyways where traffic speed is limited to 15 miles per hour.

SURFACE:	Smooth	FINISH:	Raw
WEIGHT:	218.73 lbs	MARKING:	None

JENSEN METALTECH
450 E. GLENDALE AVE. SPARKS. NV 89431
775-352-2716 FAX: 755-358-8127
JENSENMETALTECH.COM

©2022 Jensen Precast- All rights reserved. All materials appearing as Jensen Precast documents and the like are proprietary work product and are protected under U.S. copyright and other laws. Unless in conjunction with business conducted with Jensen Precast, any use of Jensen Precast work product without express, written consent is prohibited, and recipient is prohibited from distributing any and all work product to non-approved third parties under penalty of civil action.

DESCRIPTION:	FAS-54102-AH5-R-SAC-PG&E-OH08-SPLICE 54x102 Frame Assembly (ASTM Load Level 05, Door, Steel, Hinged, Raw , , PG&E) OH 08	REV:	
PART NUMBER:	200066053	DRAWN BY:	CNATION
CREATED:	4/17/2018	MODIFIED:	7/19/2022
		SHEET:	1

200066808.idw

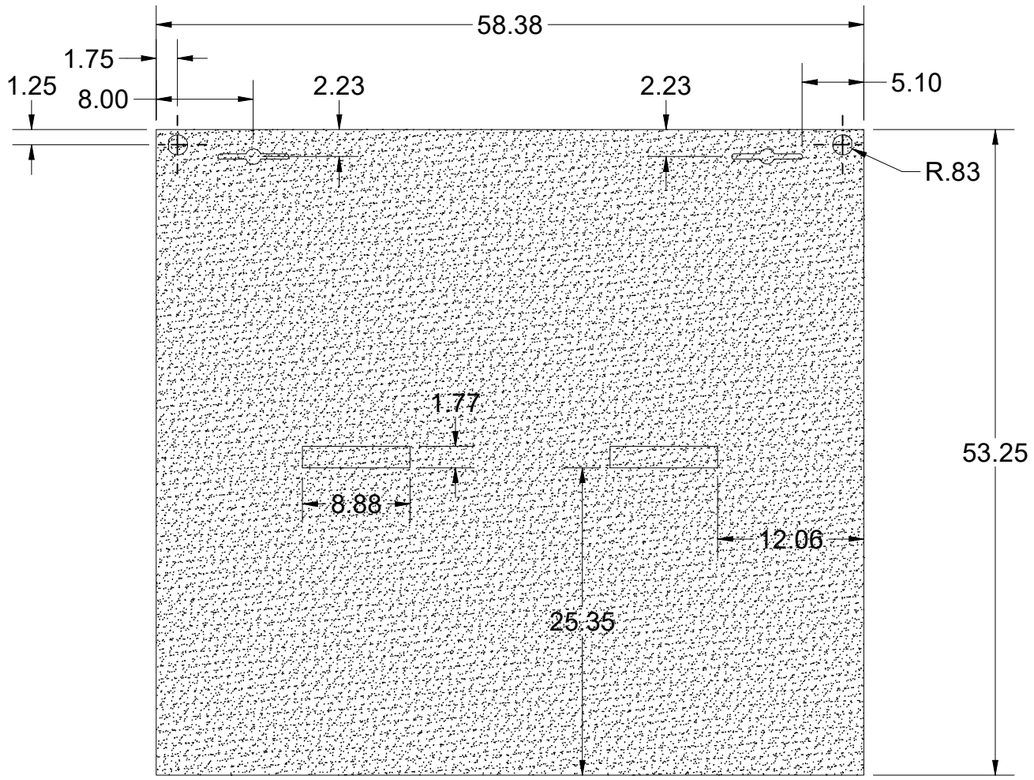

BEND TABLE				MATERIAL IFS: 100007838			
BEND RADIUS	V-OPENING	BEND ANGLE	BEND DEDUCTION	MATERIAL THK: 0.3125			
-	-	-	-	MAT DESCRIPTION: STL ASTM A36 SM-HRPO RAW .3125			

JENSEN METALTECH
450 E. GLENDALE AVE. SPARKS. NV 89431
775-352-2716 FAX: 755-358-8127
JENSENMETALTECH.COM

©2022 Jensen Precast- All rights reserved.
All materials appearing as Jensen Precast documents and the like are proprietary work product and are protected under U.S. copyright and other laws.
Unless in conjunction with business conducted with Jensen Precast, any use of Jensen Precast work product without express, written consent is prohibited, and recipient is prohibited from distributing any and all work product to non-approved third parties under penalty of civil action.

NAME & DESCRIPTION: 200066061 Door Component Steel Plate, Bottom Nameplate		REV:
WEIGHT: 271.755 lbmass	DRAWN BY: CNATION	SHEET:
CREATED: 9/10/2019	MODIFIED: 7/19/2022	7 OF 17

200066808.idw

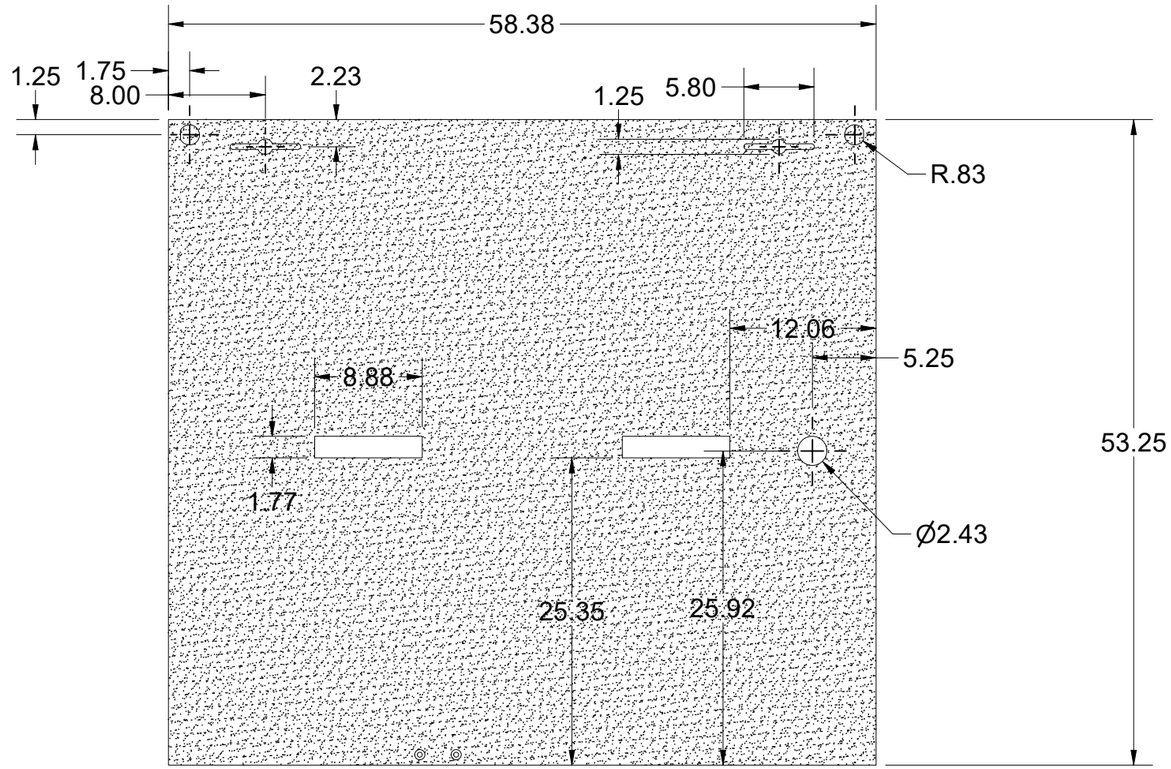

BEND TABLE				MATERIAL IFS: 100007838				
BEND RADIUS	V-OPENING	BEND ANGLE	BEND DEDUCTION	MATERIAL THK: 0.3125				
-	-	-	-	MAT DESCRIPTION: STL ASTM A36 SM-HRPO RAW .3125				

JENSEN METALTECH
450 E. GLENDALE AVE. SPARKS. NV 89431
775-352-2716 FAX: 755-358-8127
JENSENMETALTECH.COM

©2022 Jensen Precast- All rights reserved.
All materials appearing as Jensen Precast documents and the like are proprietary work product and are protected under U.S. copyright and other laws.
Unless in conjunction with business conducted with Jensen Precast, any use of Jensen Precast work product without express, written consent is prohibited, and recipient is prohibited from distributing any and all work product to non-approved third parties under penalty of civil action.

NAME & DESCRIPTION: 200066058 Door Component Aluminum Plate, Top Nameplate		REV:
WEIGHT: 271.291 lbmass	DRAWN BY: CNATION	SHEET: 8 OF 17
CREATED: 9/10/2019	MODIFIED: 7/19/2022	

200066808.idw

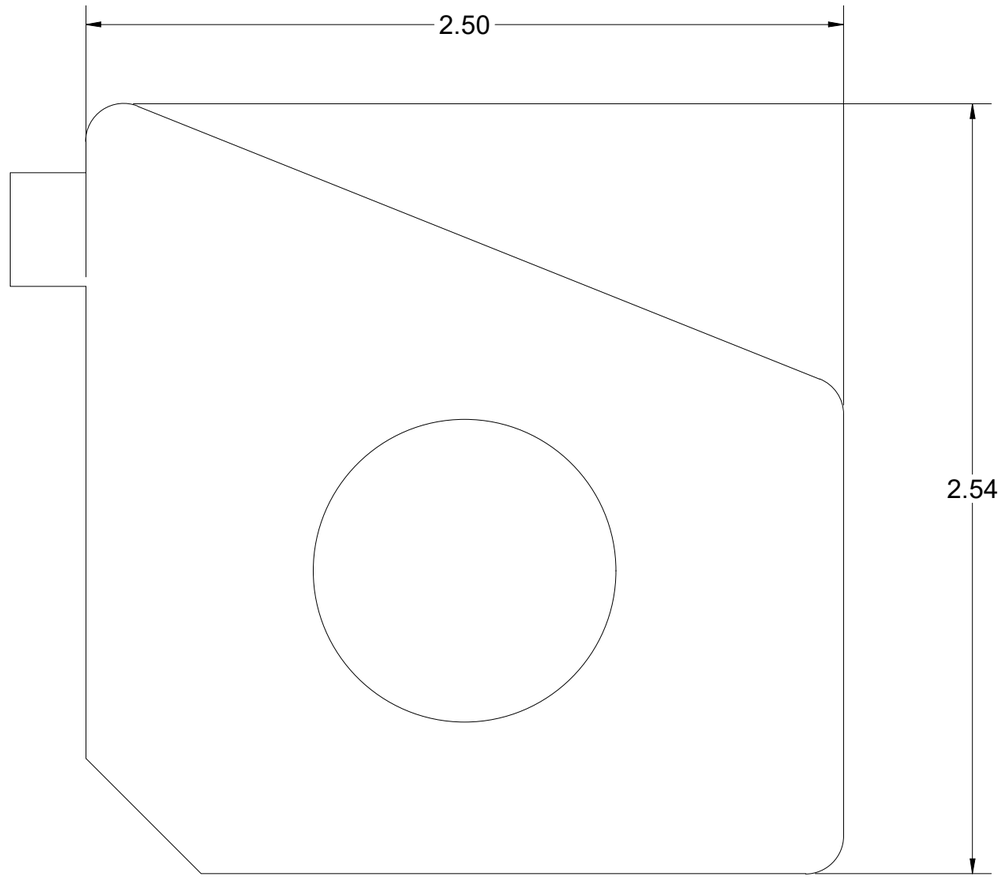

200066808.idw

BEND TABLE				MATERIAL IFS: 100007804
BEND RADIUS	V-OPENING	BEND ANGLE	BEND DEDUCTION	MATERIAL THK: 0.25
-	-	-	-	MAT DESCRIPTION: SHT ALUM ASTM 6061 SM-RAW 60W .25

JENSEN METALTECH
450 E. GLENDALE AVE. SPARKS. NV 89431
775-352-2716 FAX: 755-358-8127
JENSENMETALTECH.COM

©2022 Jensen Precast- All rights reserved.
All materials appearing as Jensen Precast documents and the like are proprietary work product and are protected under U.S. copyright and other laws.
Unless in conjunction with business conducted with Jensen Precast, any use of Jensen Precast work product without express, written consent is prohibited, and recipient is prohibited from distributing any and all work product to non-approved third parties under penalty of civil action.

NAME & DESCRIPTION:	200029173 ANGLE GUSSET		REV: B-1
WEIGHT: 0.110 lbmass		DRAWN BY: CNATION	SHEET: 9 OF 17
CREATED: 9/10/2019		MODIFIED: 7/19/2022	

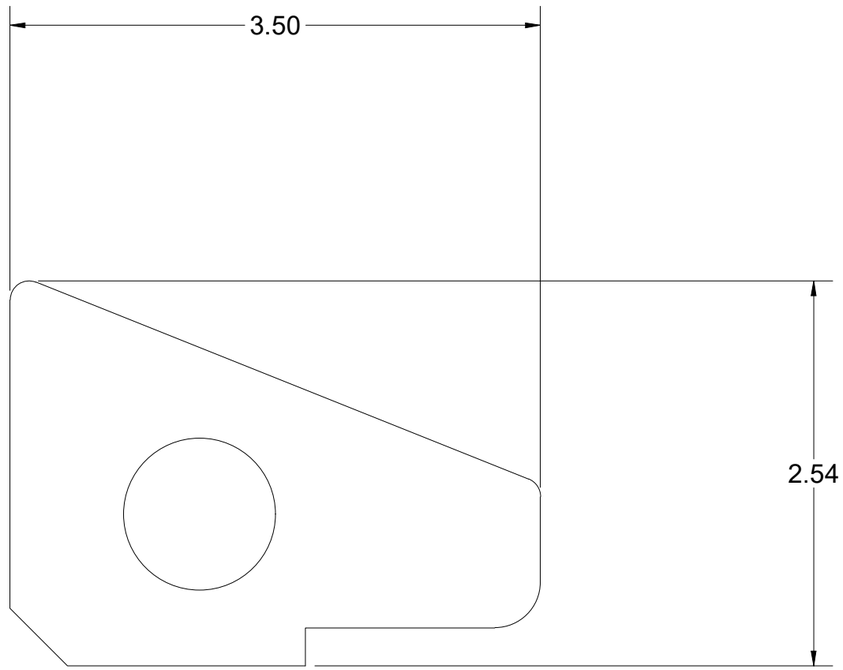

200066808.idw

BEND TABLE				MATERIAL IFS: 100007804				
BEND RADIUS	V-OPENING	BEND ANGLE	BEND DEDUCTION	MATERIAL THK: 0.25				
-	-	-	-	MAT DESCRIPTION: SHT ALUM ASTM 6061 SM-RAW 60W .25				

JENSEN METALTECH
450 E. GLENDALE AVE. SPARKS. NV 89431
775-352-2716 FAX: 755-358-8127
JENSENMETALTECH.COM

©2022 Jensen Precast- All rights reserved.
All materials appearing as Jensen Precast documents and the like are proprietary work product and are protected under U.S. copyright and other laws.
Unless in conjunction with business conducted with Jensen Precast, any use of Jensen Precast work product without express, written consent is prohibited, and recipient is prohibited from distributing any and all work product to non-approved third parties under penalty of civil action.

NAME & DESCRIPTION:	200029182 Door Component Aluminum Lifting Tab		REV: C-1
WEIGHT: 0.132 lbmass	DRAWN BY: CNATION		SHEET: 10 OF 17
CREATED: 9/10/2019	MODIFIED: 7/19/2022		

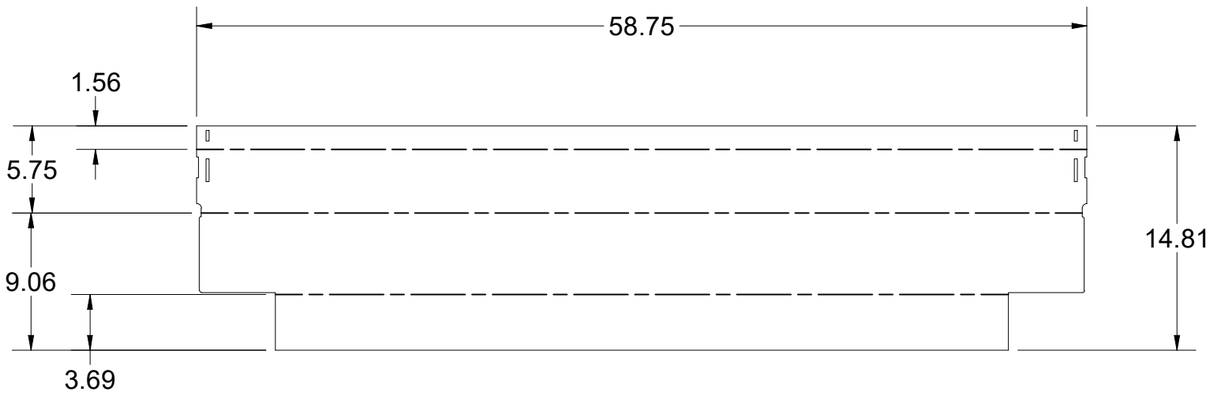

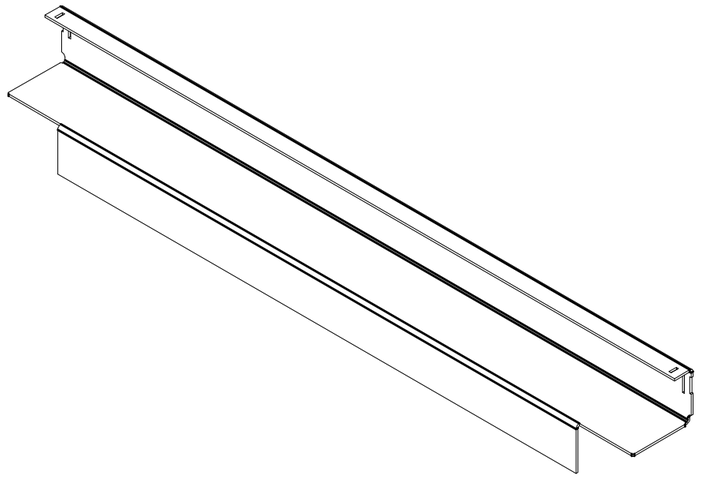

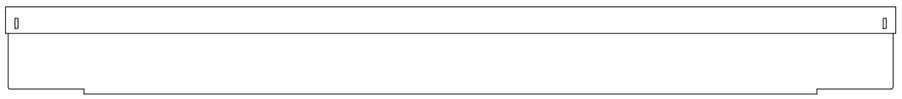

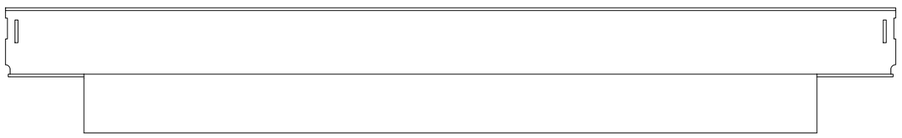

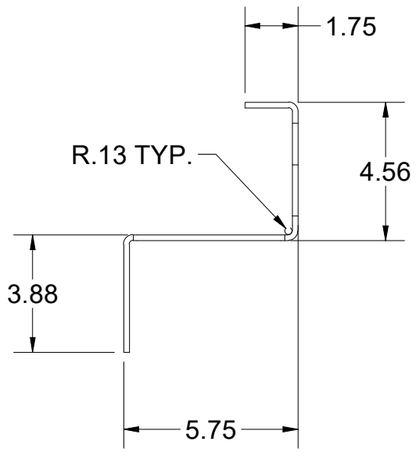

200066808.idw

BEND TABLE				MATERIAL IFS: 100007734
BEND RADIUS	V-OPENING	BEND ANGLE	BEND DEDUCTION	MATERIAL THK: 0.1875
0.125	2"	90	0.3750	MAT DESCRIPTION: STL ASTM A36 SM-HRPO 60X120 RAW .1875

JENSEN METALTECH
450 E. GLENDALE AVE. SPARKS. NV 89431
775-352-2716 FAX: 755-358-8127
JENSENMETALTECH.COM

©2022 Jensen Precast- All rights reserved. All materials appearing as Jensen Precast documents and the like are proprietary work product and are protected under U.S. copyright and other laws. Unless in conjunction with business conducted with Jensen Precast, any use of Jensen Precast work product without express, written consent is prohibited, and recipient is prohibited from distributing any and all work product to non-approved third parties under penalty of civil action.

NAME & DESCRIPTION: 200066055 Frame Component Steel Frame End, Cast In		REV:
WEIGHT: 44.809 lbmass	DRAWN BY: CNATION	SHEET: 11 OF 17
CREATED: 9/9/2019	MODIFIED: 7/19/2022	

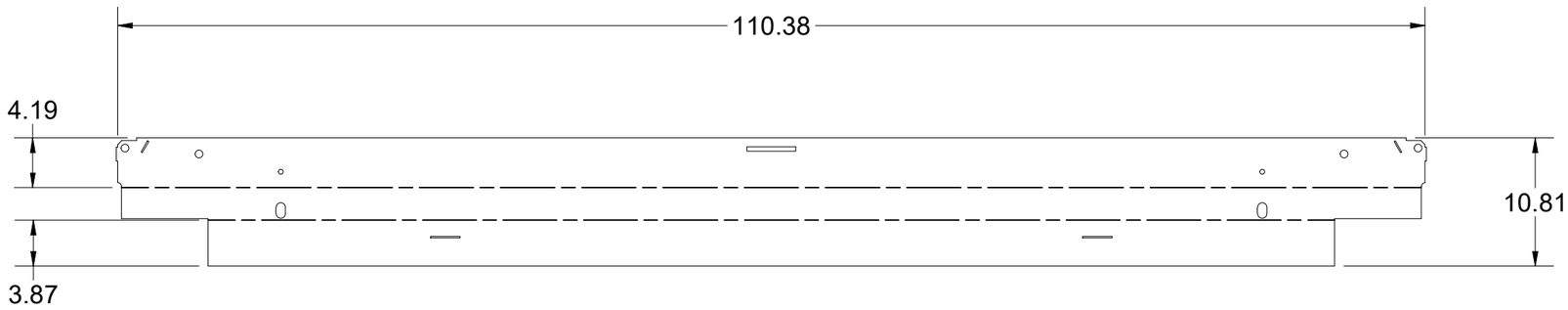

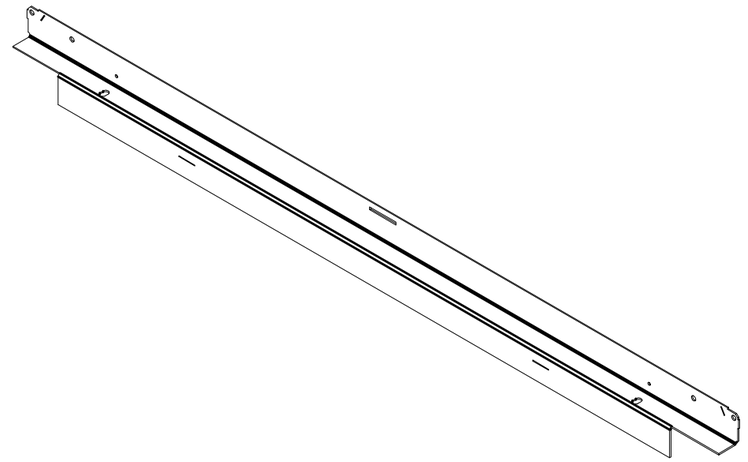

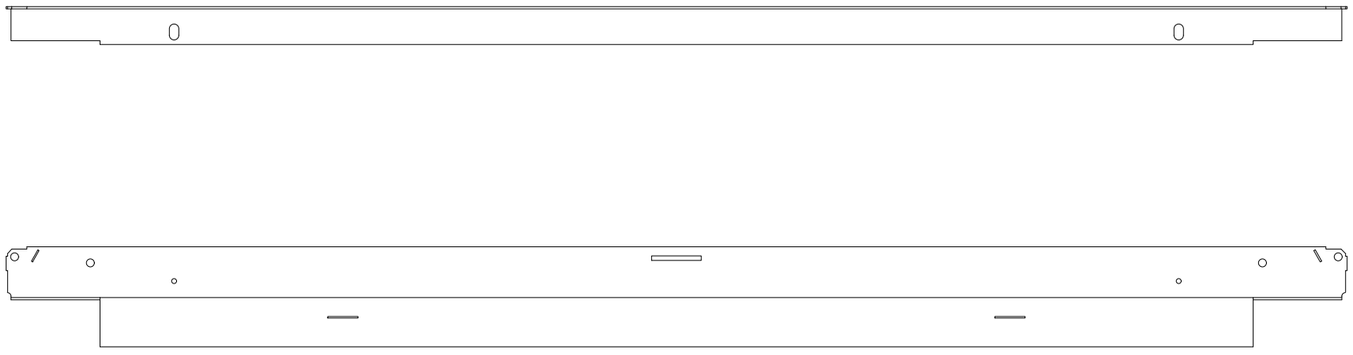

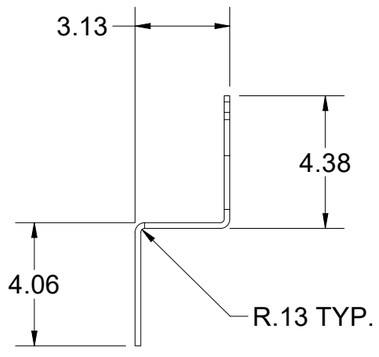

BEND TABLE			
BEND RADIUS	V-OPENING	BEND ANGLE	BEND DEDUCTION
0.125	2"	90	0.3750

MATERIAL IFS: 100007734

MATERIAL THK: 0.1875

MAT DESCRIPTION: STL ASTM A36 SM-HRPO 60X120 RAW .1875

JENSEN METALTECH
450 E. GLENDALE AVE. SPARKS. NV 89431
775-352-2716 FAX: 755-358-8127
JENSENMETALTECH.COM

©2022 Jensen Precast- All rights reserved. All materials appearing as Jensen Precast documents and the like are proprietary work product and are protected under U.S. copyright and other laws. Unless in conjunction with business conducted with Jensen Precast, any use of Jensen Precast work product without express, written consent is prohibited, and recipient is prohibited from distributing any and all work product to non-approved third parties under penalty of civil action.

NAME & DESCRIPTION: 200066054
Frame Component Steel Frame Side, Adjustable

REV:

WEIGHT: 60.803 lbmass

DRAWN BY: CNATION

CREATED: 9/9/2019

MODIFIED: 7/19/2022

SHEET: 12 OF 17

200066808.idw

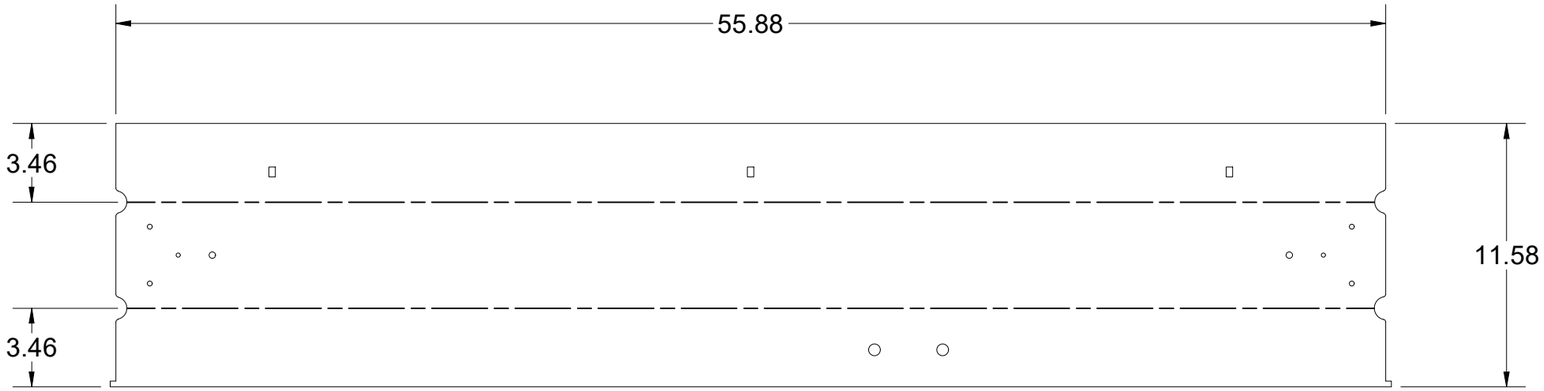

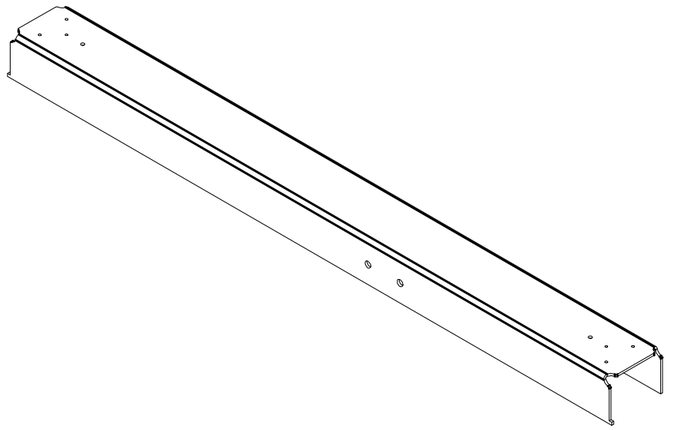

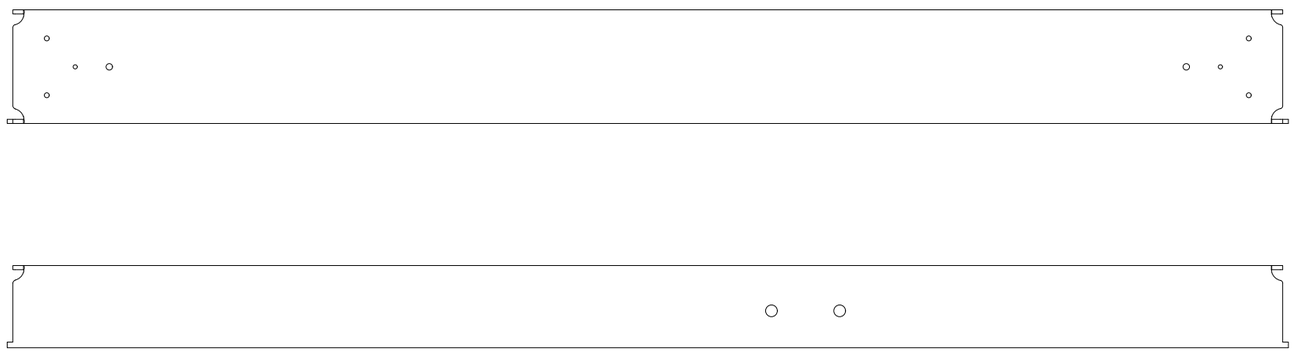

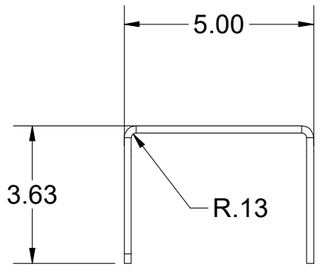

BEND TABLE				MATERIAL IFS: 100007813
BEND RADIUS	V-OPENING	BEND ANGLE	BEND DEDUCTION	MATERIAL THK: 0.1875
0.125	2"	90	0.3350	MAT DESCRIPTION: SHT ALUM ASTM 5052 SM RAW .1875

JENSEN METALTECH
450 E. GLENDALE AVE. SPARKS. NV 89431
775-352-2716 FAX: 755-358-8127
JENSENMETALTECH.COM

©2022 Jensen Precast- All rights reserved.
All materials appearing as Jensen Precast documents and the like are proprietary work product and are protected under U.S. copyright and other laws.
Unless in conjunction with business conducted with Jensen Precast, any use of Jensen Precast work product without express, written consent is prohibited, and recipient is prohibited from distributing any and all work product to non-approved third parties under penalty of civil action.

NAME & DESCRIPTION:	200032868 Door Component Aluminum Channel		REV:
WEIGHT:	12.523 lbmass	DRAWN BY: CNATION	SHEET: 13 OF 17
CREATED:	9/10/2019	MODIFIED: 7/19/2022	

200066808.idw

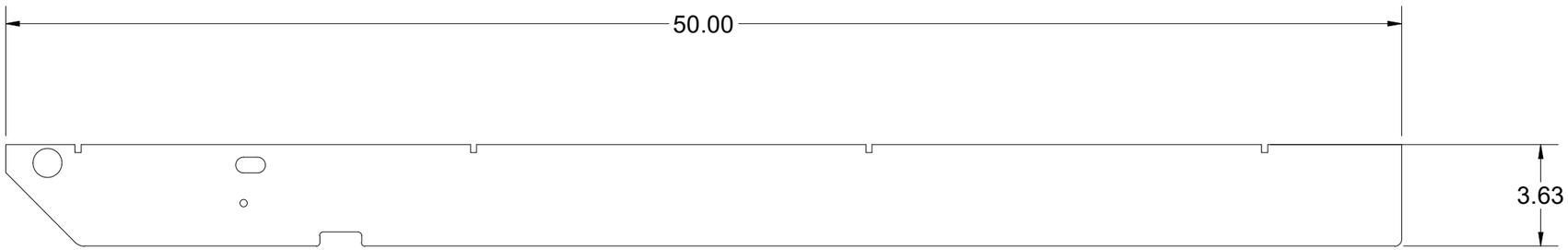

BEND TABLE				MATERIAL IFS: 100007804
BEND RADIUS	V-OPENING	BEND ANGLE	BEND DEDUCTION	MATERIAL THK: 0.25
-	-	-	-	MAT DESCRIPTION: SHT ALUM ASTM 6061 SM-RAW 60W .25

JENSEN METALTECH
450 E. GLENDALE AVE. SPARKS. NV 89431
775-352-2716 FAX: 755-358-8127
JENSENMETALTECH.COM

©2022 Jensen Precast- All rights reserved.
All materials appearing as Jensen Precast documents and the like are proprietary work product and are protected under U.S. copyright and other laws.
Unless in conjunction with business conducted with Jensen Precast, any use of Jensen Precast work product without express, written consent is prohibited, and recipient is prohibited from distributing any and all work product to non-approved third parties under penalty of civil action.

NAME & DESCRIPTION: 200032870 Door Component Aluminum Side Bar		REV:
WEIGHT: 4.296 lbmass	DRAWN BY: CNATION	SHEET: 14 OF 17
CREATED: 9/10/2019	MODIFIED: 7/19/2022	

200066808.idw

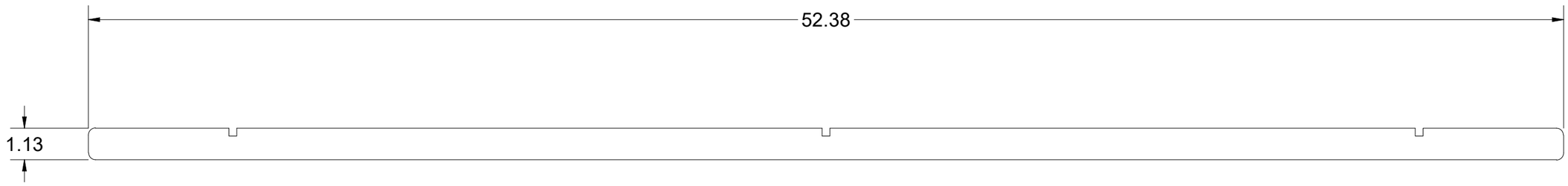

BEND TABLE				MATERIAL IFS: 100007804			
BEND RADIUS	V-OPENING	BEND ANGLE	BEND DEDUCTION	MATERIAL THK: 0.25			
-	-	-	-	MAT DESCRIPTION: SHT ALUM ASTM 6061 SM-RAW 60W .25			

JENSEN METALTECH
450 E. GLENDALE AVE. SPARKS. NV 89431
775-352-2716 FAX: 755-358-8127
JENSENMETALTECH.COM

©2022 Jensen Precast- All rights reserved.
All materials appearing as Jensen Precast documents and the like are proprietary work product and are protected under U.S. copyright and other laws.
Unless in conjunction with business conducted with Jensen Precast, any use of Jensen Precast work product without express, written consent is prohibited, and recipient is prohibited from distributing any and all work product to non-approved third parties under penalty of civil action.

NAME & DESCRIPTION:	200032871 Door Component Aluminum Lap Bar		REV:
WEIGHT: 1.436 lbmass	DRAWN BY: CNATION		SHEET: 15 OF 17
CREATED: 9/10/2019	MODIFIED: 7/19/2022		

200066808.idw

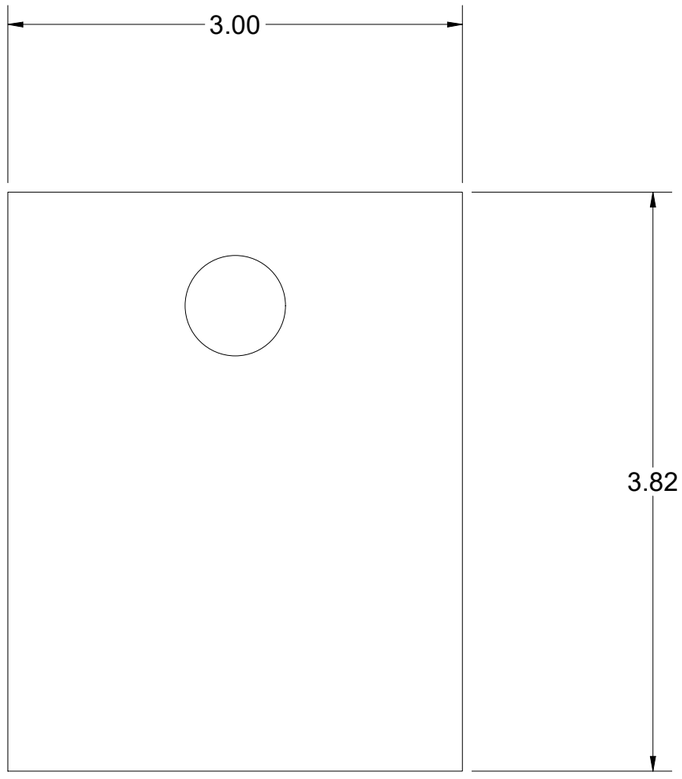

200066808.idw

BEND TABLE				MATERIAL IFS: 100007734
BEND RADIUS	V-OPENING	BEND ANGLE	BEND DEDUCTION	MATERIAL THK: 0.1875
-	-	-	-	MAT DESCRIPTION: STL ASTM A36 SM-HRPO 60X120 RAW .1875

JENSEN METALTECH
450 E. GLENDALE AVE. SPARKS. NV 89431
775-352-2716 FAX: 755-358-8127
JENSENMETALTECH.COM

©2022 Jensen Precast- All rights reserved.
All materials appearing as Jensen Precast documents and the like are proprietary work product and are protected under U.S. copyright and other laws.
Unless in conjunction with business conducted with Jensen Precast, any use of Jensen Precast work product without express, written consent is prohibited, and recipient is prohibited from distributing any and all work product to non-approved third parties under penalty of civil action.

NAME & DESCRIPTION:		REV:
200033136 PG&E FRAME CORNER 4" SKIRT		A
WEIGHT: 0.591 lbmass	DRAWN BY: CNATION	SHEET: 16 OF 17
CREATED: 9/9/2019	MODIFIED: 7/19/2022	

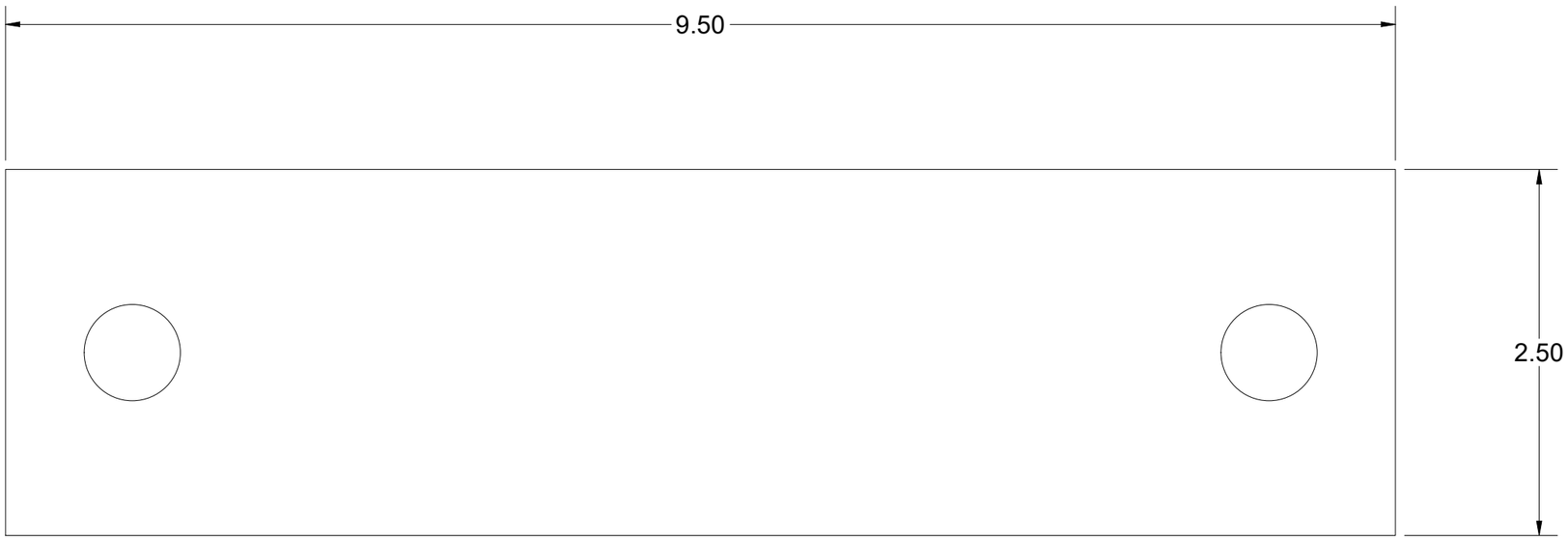

200066808.idw

BEND TABLE				MATERIAL IFS: 100007804
BEND RADIUS	V-OPENING	BEND ANGLE	BEND DEDUCTION	MATERIAL THK: 0.25
-	-	-	-	MAT DESCRIPTION: SHT ALUM ASTM 6061 SM-RAW 60W .25

JENSEN METALTECH
450 E. GLENDALE AVE. SPARKS. NV 89431
775-352-2716 FAX: 755-358-8127
JENSENMETALTECH.COM

©2022 Jensen Precast- All rights reserved.
All materials appearing as Jensen Precast documents and the like are proprietary work product and are protected under U.S. copyright and other laws.
Unless in conjunction with business conducted with Jensen Precast, any use of Jensen Precast work product without express, written consent is prohibited, and recipient is prohibited from distributing any and all work product to non-approved third parties under penalty of civil action.

NAME & DESCRIPTION: 200033796 PG&E NAME PLATE BACKING PLATE - ALUM		REV: B-1
WEIGHT: 0.565 lbmass	DRAWN BY: CNATION	SHEET: 17 OF 17
CREATED: 10/16/2018	MODIFIED: 7/19/2022	