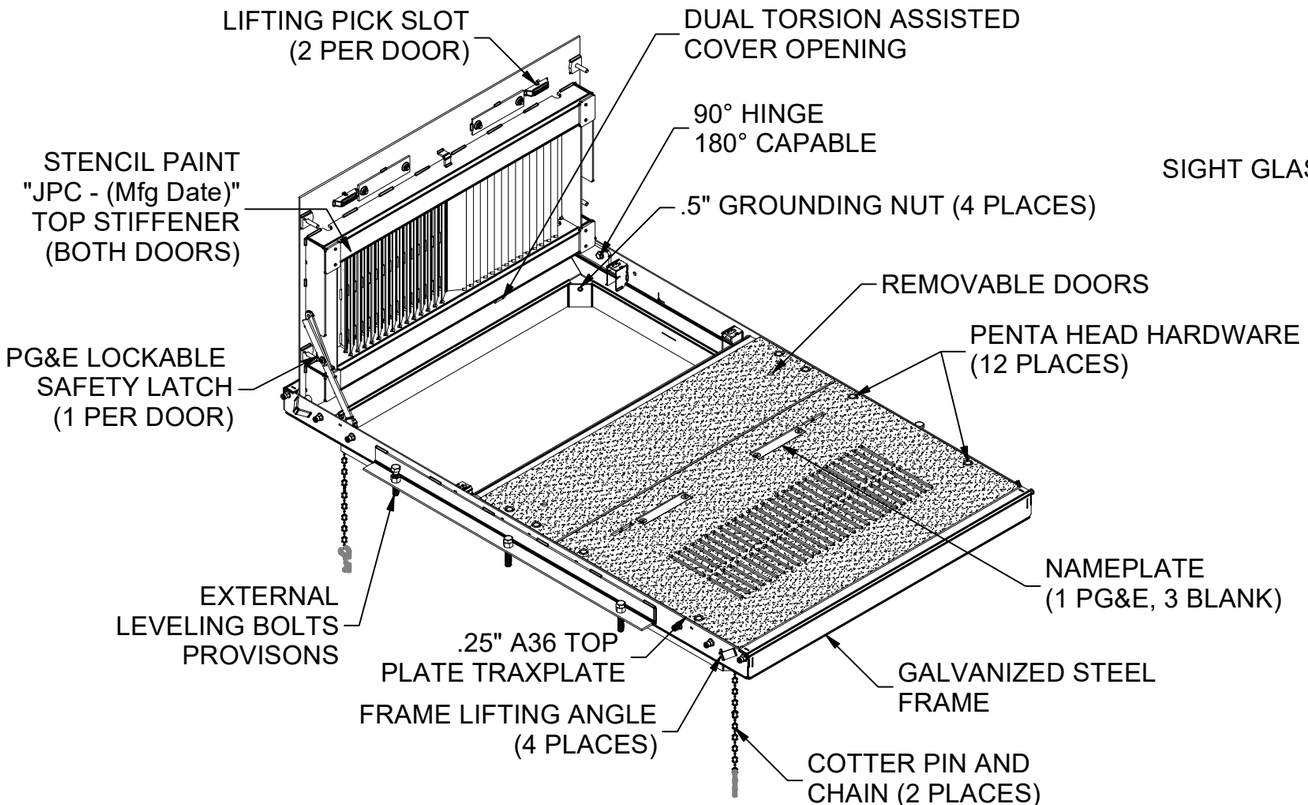

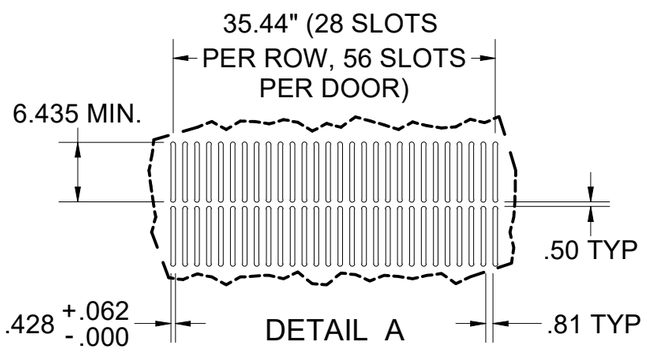

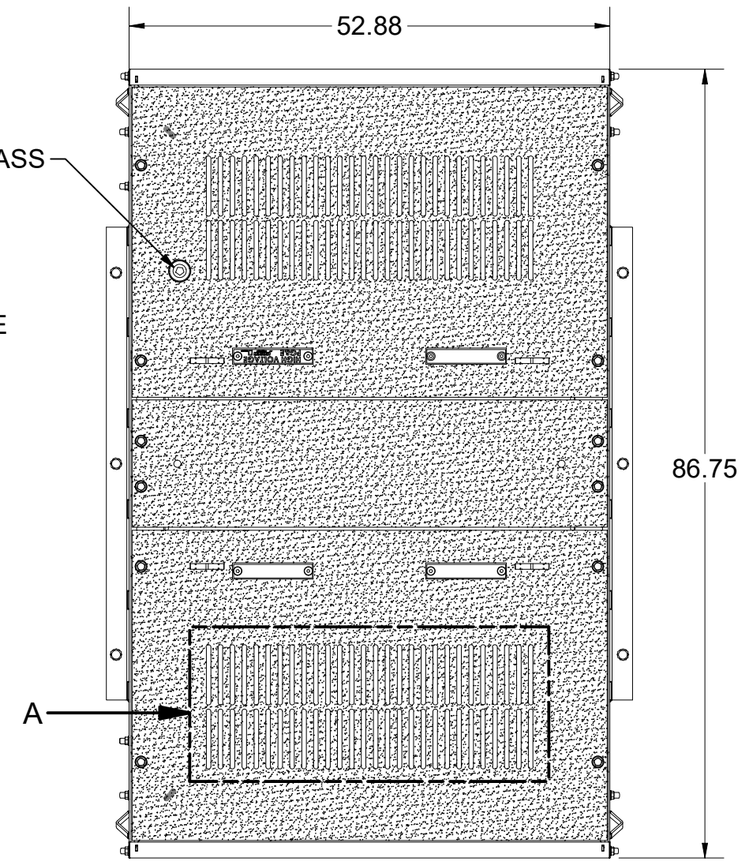

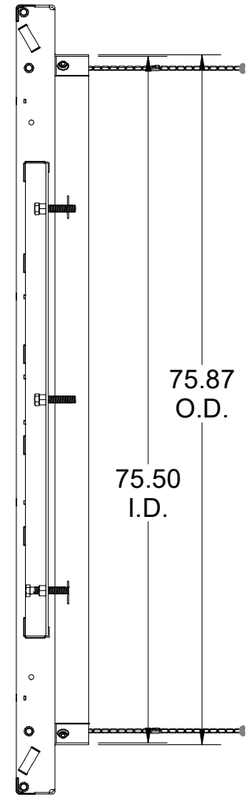

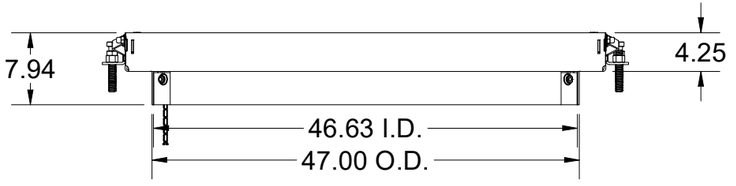

TYPICAL VENT SLOT AREA = 2.69 sq in to 3.17 sq in
MINIMUM TOTAL OPEN AREA PER ASSEMBLY = 301.1 sq in
(AFTER TRAX AND GALV PROCESS)

SEE SHEET 2 FOR REVISION HISTORY

100002423_Submittal.idw

LOADING: PG&E FVT TRANSFORMER				DESCRIPTION: CAS2-4878-AH-TRX-G-SG-GR-PG&E-OH08-TRANSFORMER FVT 48x78 Cover Assembly (Loading Criteria Per N/A, , Steel, Hinged, Pickhole, TraxPlate™, Galvanized , Sight Glass, PG&E TRANSFORMER FVT) 08		REV:	G-1
SURFACE:	TraxPlate™	FINISH:	Galvanized	PART NUMBER:	100002423	DRAWN BY:	A.Billett
WEIGHT:	1137.48 lbs	MARKING:	As Noted	CREATED:	10/6/2022	MODIFIED:	9/11/2023
						SHEET:	1

JENSEN METALTECH
450 E. GLENDALE AVE. SPARKS. NV 89431
775-352-2716 FAX: 755-358-8127
JENSENMETALTECH.COM

©2023 Jensen Precast- All rights reserved.
All materials appearing as Jensen Precast documents and the like are proprietary work product and are protected under U.S. copyright and other laws.
Unless in conjunction with business conducted with Jensen Precast, any use of Jensen Precast work product without express, written consent is prohibited, and recipient is prohibited from distributing any and all work product to non-approved third parties under penalty of civil action.

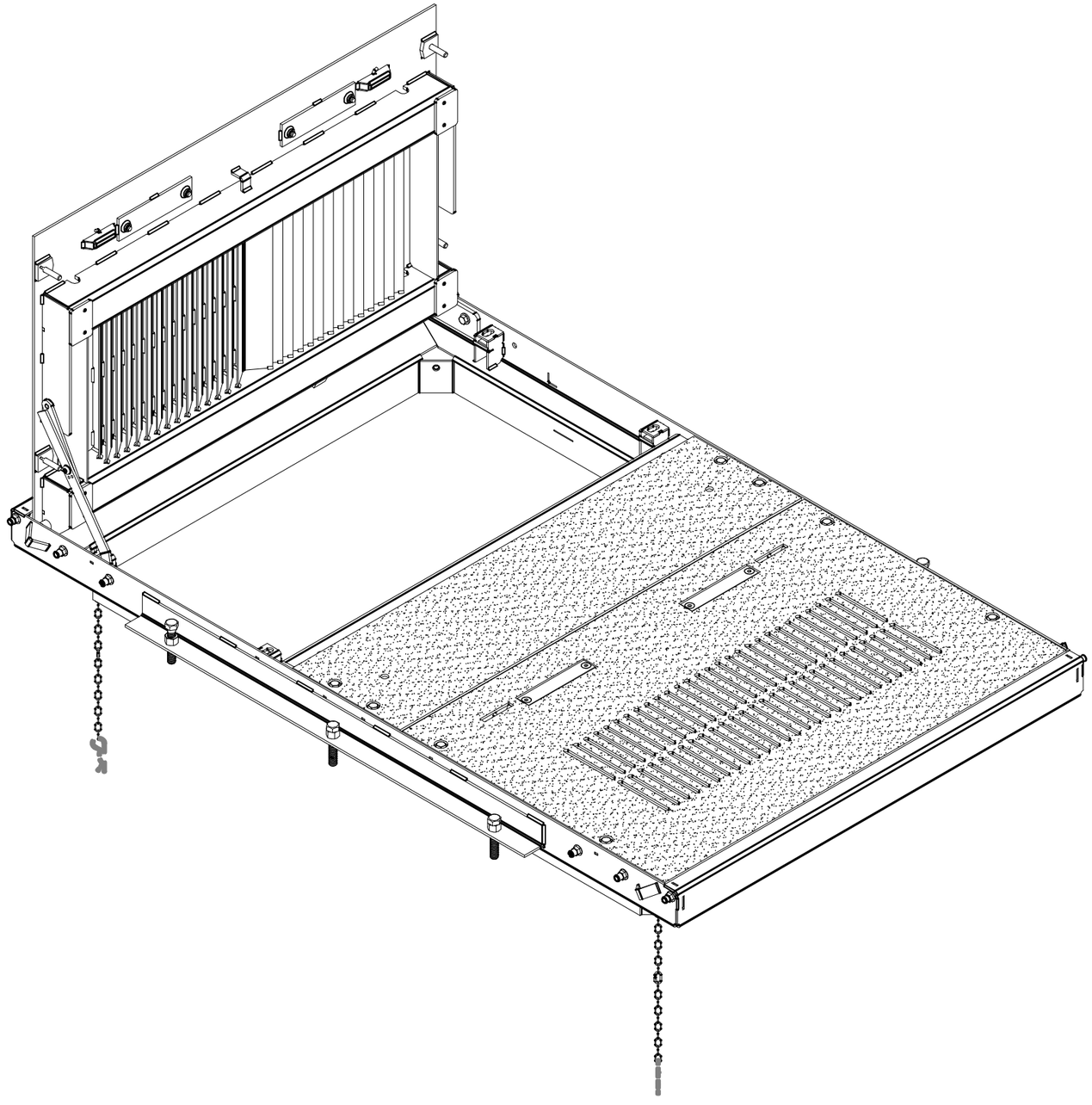

REVISION HISTORY		
REV	DESCRIPTION	DATE
A-1	1ST ARTICLE PRODUCTION RELEASE	10/6/22
B-1	CHANNELS INCREASED TO 5/16" THK, DUE TO INHOUSE LOAD TESTING RESULTS	10/26/22
C-1	UPDATED MODELS TO REFLECT PG&E AUDIT RESULTS	12/6/22
D-1	INCREASED SLOTS SIZE FOR TRAX AND GALV BUILD UP AND UPDATED WELD CALLOUTS TO MATCH MANUFACTURING	3/13/23
E-1	UPDATED NOTES AND WELD CALLOUTS PER PG&E COMMENTS DURING TESTING; CHANGED TO 2.25" COVER BOLTS	6/7/23
F-1	UPDATED LOUVER END WELDS FROM 1" TO 1/2" LG PER PG&E REQUEST	8/17/2023
G-1	ADDED UPDATED SLOT TOLERANCES PER PG&E REQUEST; ADDED STENCIL NOTE AND TAPE NOTE FOR HAIRPIN COTTER	9/11/2023

100002423_Submittal.idw

MATERIAL FINISH:
Galvanized

MATERIAL SURFACE:
TraxPlate™

JENSEN METALTECH
450 E. GLENDALE AVE. SPARKS. NV 89431
775-352-2716 FAX: 755-358-8127
JENSENMETALTECH.COM

©2023 Jensen Precast- All rights reserved.
All materials appearing as Jensen Precast documents and the like are proprietary work product and are protected under U.S. copyright and other laws.
Unless in conjunction with business conducted with Jensen Precast, any use of Jensen Precast work product without express, written consent is prohibited, and recipient is prohibited from distributing any and all work product to non-approved third parties under penalty of civil action.

PART NUMBER & DESCRIPTION: 100002423
CAS2-4878-AH-TRX-G-SG-GR-PG&E-OH08-TRANSFORMER FVT

REV: G-1

WEIGHT: 1137.48 Lbs

DRAWN BY: A.Billett

CREATED: 10/6/2022

MODIFIED: 9/11/2023

SHEET: 2

DESIGN NOTES
- TOP PLATE: ASTM A36
- BOTTOM CHANNEL: ASTM A36
- BEARING BAR: ASTM A36
- WELD: GRADE E70
- UNLESS SPECIFIED, WELD LENGTHS ARE FULL

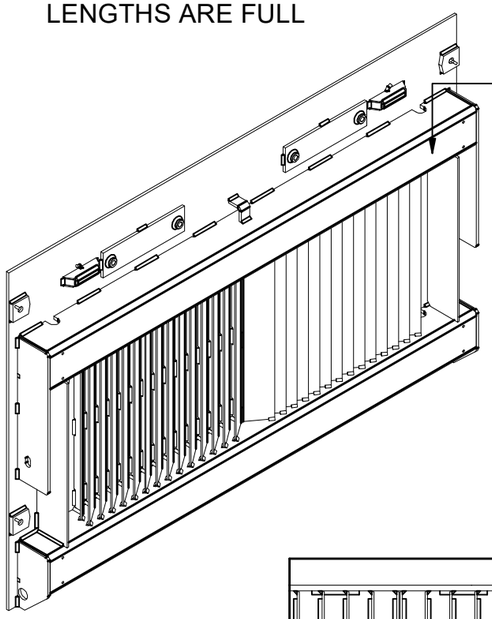

STENCIL PAINT "JPC - (Mfg Date)" TOP STIFFENER (BOTH DOORS)

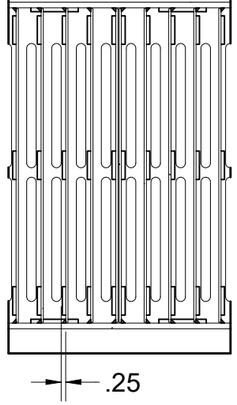

EDGE OF SLOT TO FLANGE EDGE. (200069153)

.25

SECTION D-D

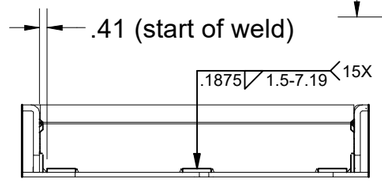

SECTION F-F

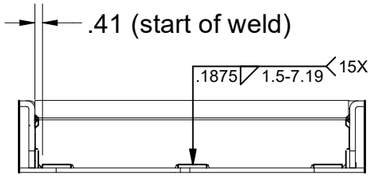

SECTION E-E

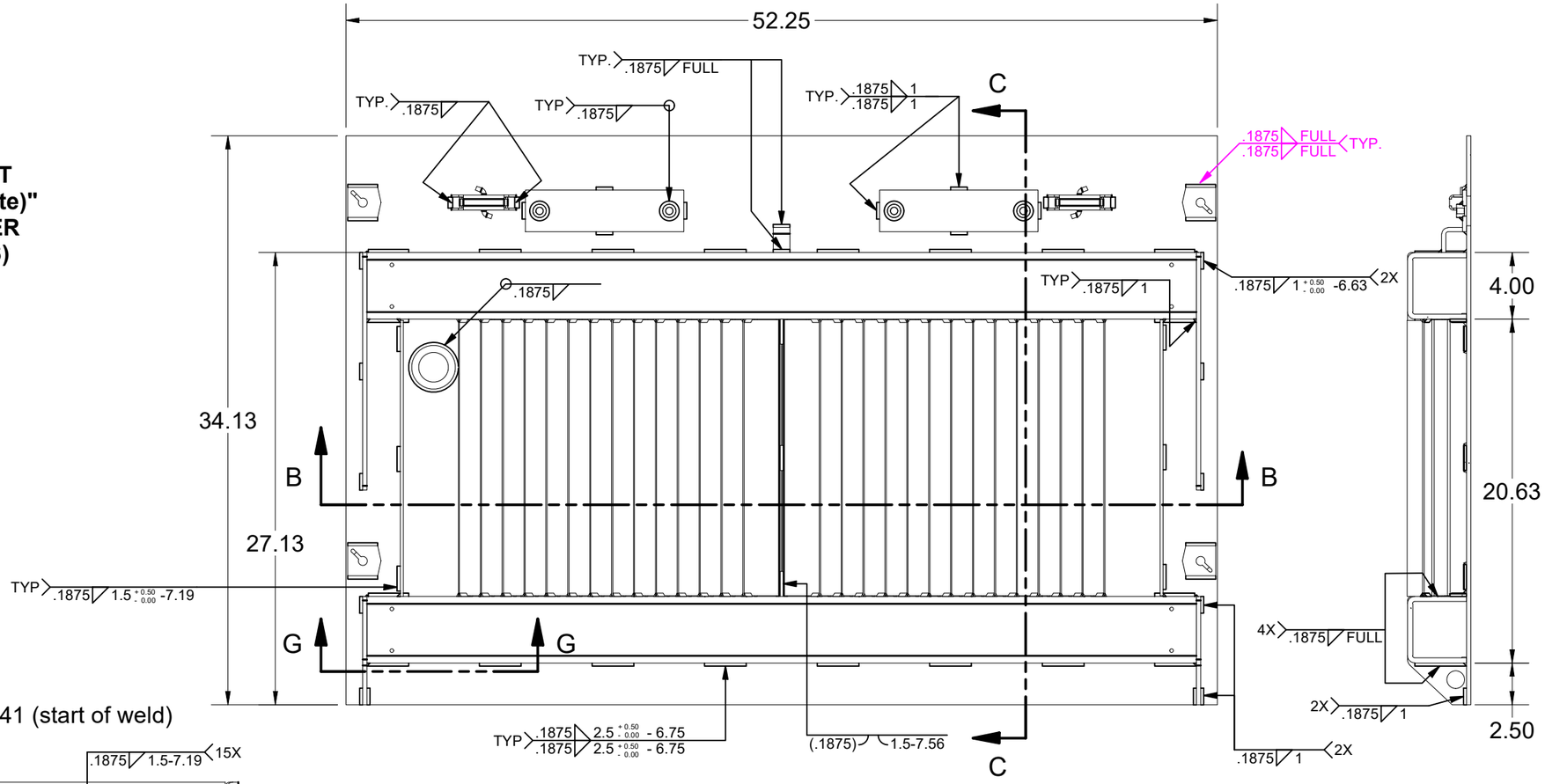

SECTION C-C

USE NOTCHES FOR HOLDING WELDING PATTERN



SECTION G-G
SCALE 1/8

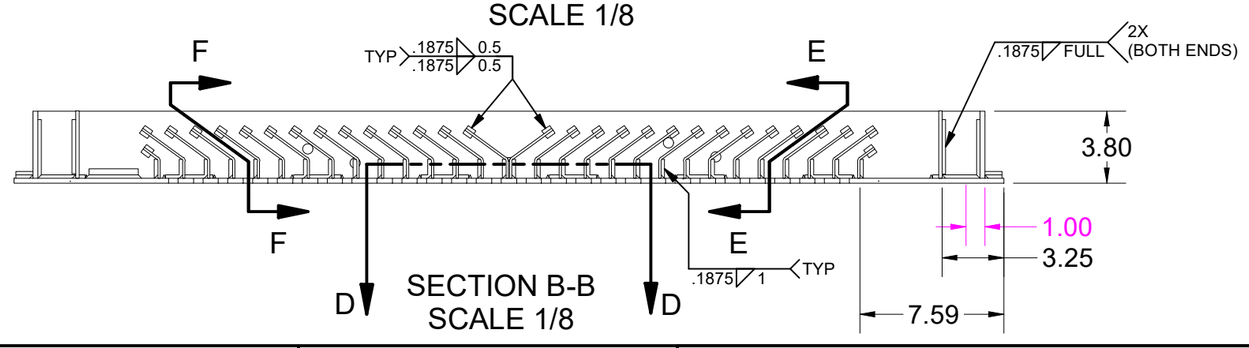

SECTION B-B
SCALE 1/8

MATERIAL FINISH: Galvanized	JENSEN METALTECH 450 E. GLENDALE AVE. SPARKS. NV 89431 775-352-2716 FAX: 755-358-8127 *JENSENMETALTECH.COM*	©2023 Jensen Precast- All rights reserved. All materials appearing as Jensen Precast documents and the like are proprietary work product and are protected under U.S. copyright and other laws. Unless in conjunction with business conducted with Jensen Precast, any use of Jensen Precast work product without express, written consent is prohibited, and recipient is prohibited from distributing any and all work product to non-approved third parties under penalty of civil action.	PART NUMBER & DESCRIPTION: 200069140 DAS2-T-4878-H-TRX-G-CL-SG-PG&E-TRANSFORMER FVT	REV: G-1
MATERIAL SURFACE: TraxPlate™			WEIGHT: 284.46 Lbs CREATED: 10/6/2022	DRAWN BY: A.Billett MODIFIED: 9/11/2023	SHEET: 3

100002423_Submittal.idw

DESIGN NOTES
- TOP PLATE: ASTM A36
- BOTTOM CHANNEL: ASTM A36
- BEARING BAR: ASTM A36
- WELD: GRADE E70
- UNLESS SPECIFIED, WELD LENGTHS ARE FULL

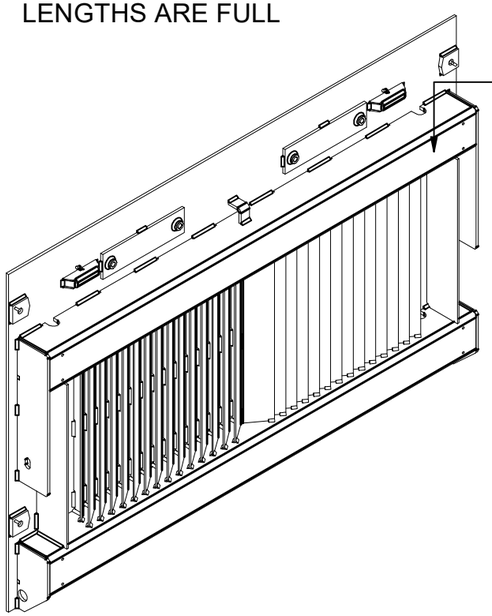

STENCIL PAINT "JPC - (Mfg Date)" TOP STIFFENER (BOTH DOORS)

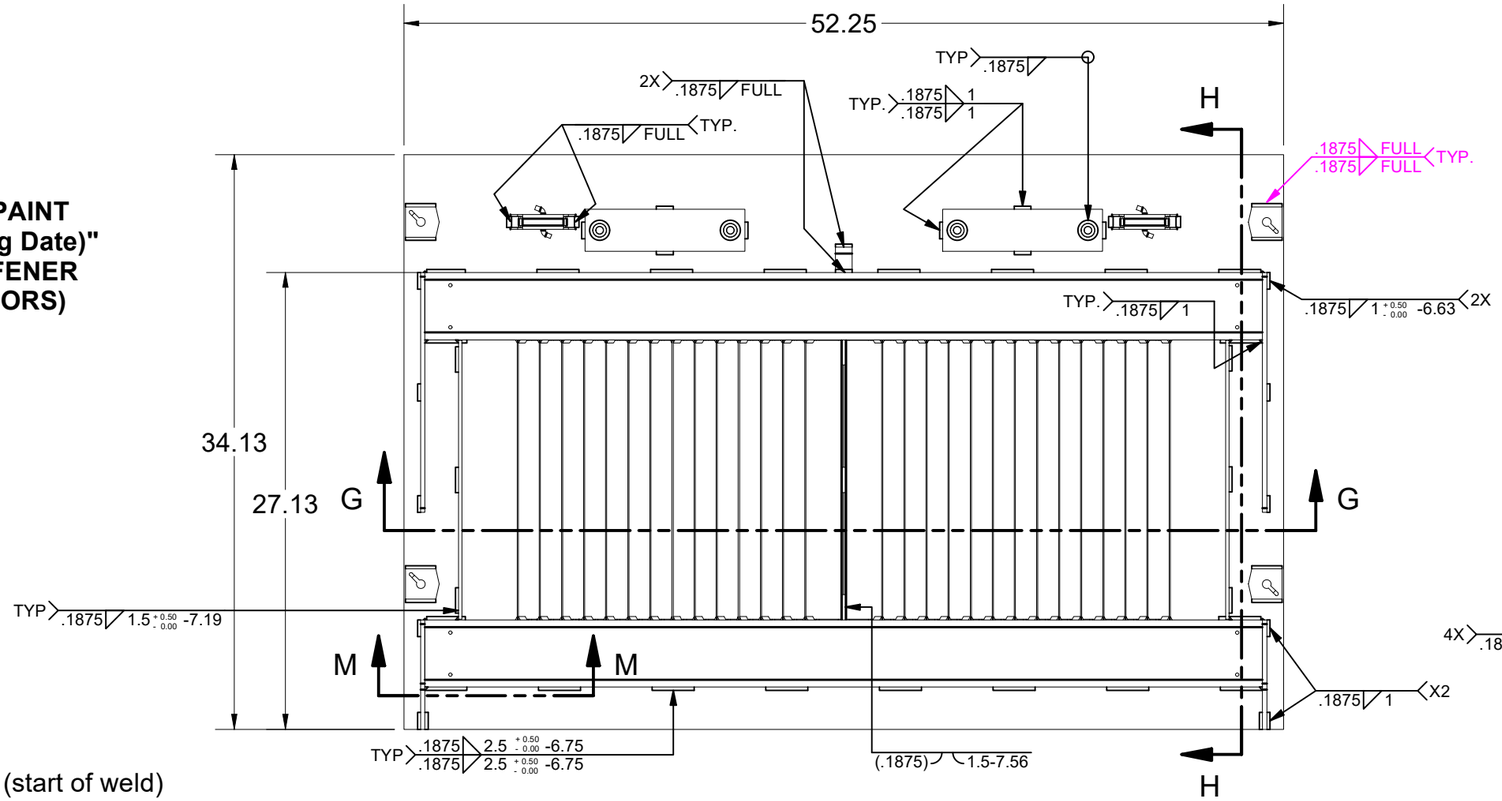

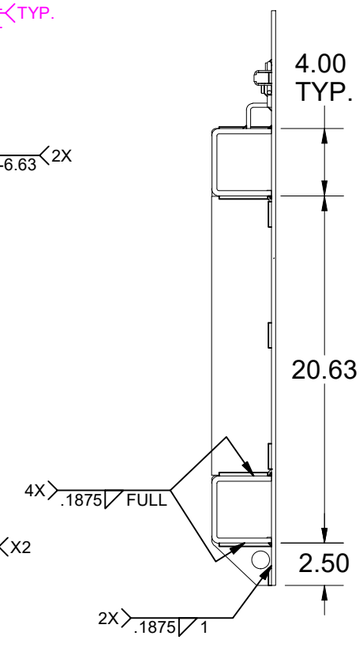

SECTION H-H

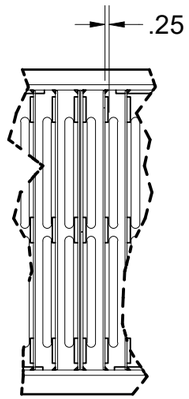

EDGE OF SLOT TO FLANGE EDGE. (200069153)

SECTION J-J

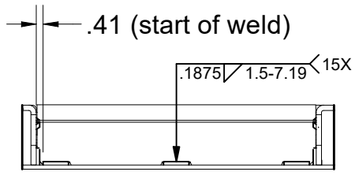

SECTION L-L

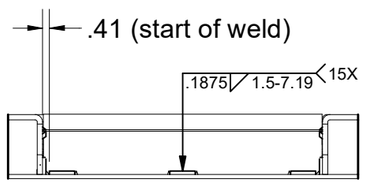

SECTION K-K

USE NOTCHES FOR HOLDING WELDING PATTERN



SECTION M-M

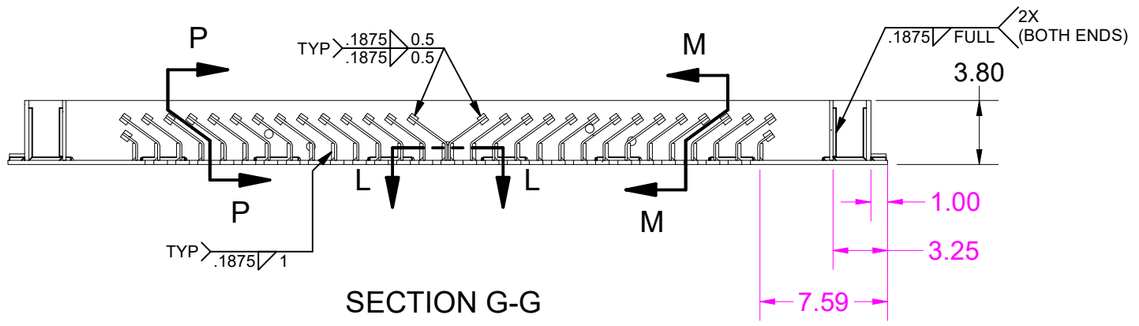

SECTION G-G

MATERIAL FINISH: Galvanized	JENSEN METALTECH 450 E. GLENDALE AVE. SPARKS. NV 89431 775-352-2716 FAX: 755-358-8127 *JENSENMETALTECH.COM*	©2023 Jensen Precast- All rights reserved. All materials appearing as Jensen Precast documents and the like are proprietary work product and are protected under U.S. copyright and other laws. Unless in conjunction with business conducted with Jensen Precast, any use of Jensen Precast work product without express, written consent is prohibited, and recipient is prohibited from distributing any and all work product to non-approved third parties under penalty of civil action.	PART NUMBER & DESCRIPTION: 200069136 DAS2-T-4878-H-TRX-G-BD-PG&E-TRANSFORMER FVT	REV: G-1
MATERIAL SURFACE: TraxPlate™			WEIGHT: 284.26 Lbs CREATED: 10/6/2022	DRAWN BY: A.Billett MODIFIED: 9/11/2023
				SHEET: 4

100002423_Submittal.idw

DESIGN NOTES
- TOP PLATE: ASTM A36
- BOTTOM CHANNEL: ASTM A36
- BEARING BAR: ASTM A36
- WELD: GRADE E70
- UNLESS SPECIFIED, WELD LENGTHS ARE FULL

USE INDICATOR NOTCHES FOR HOLDING WELD PATTERNS

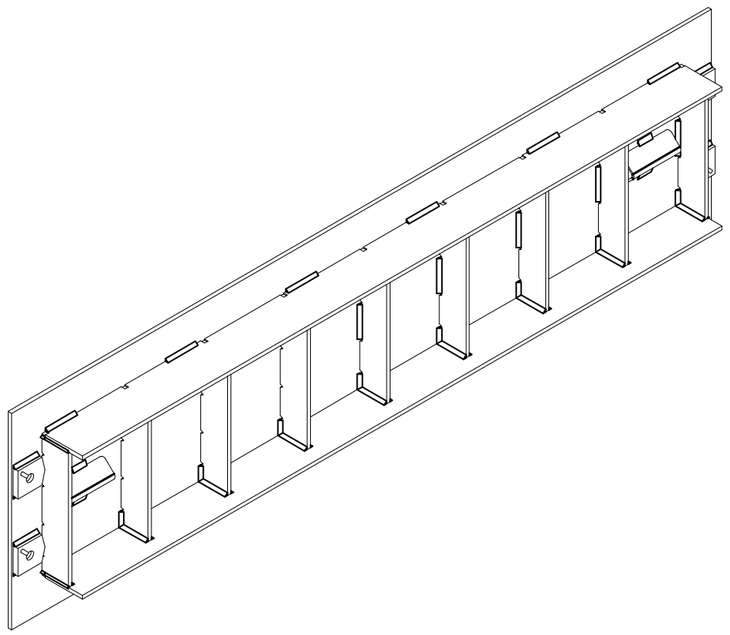

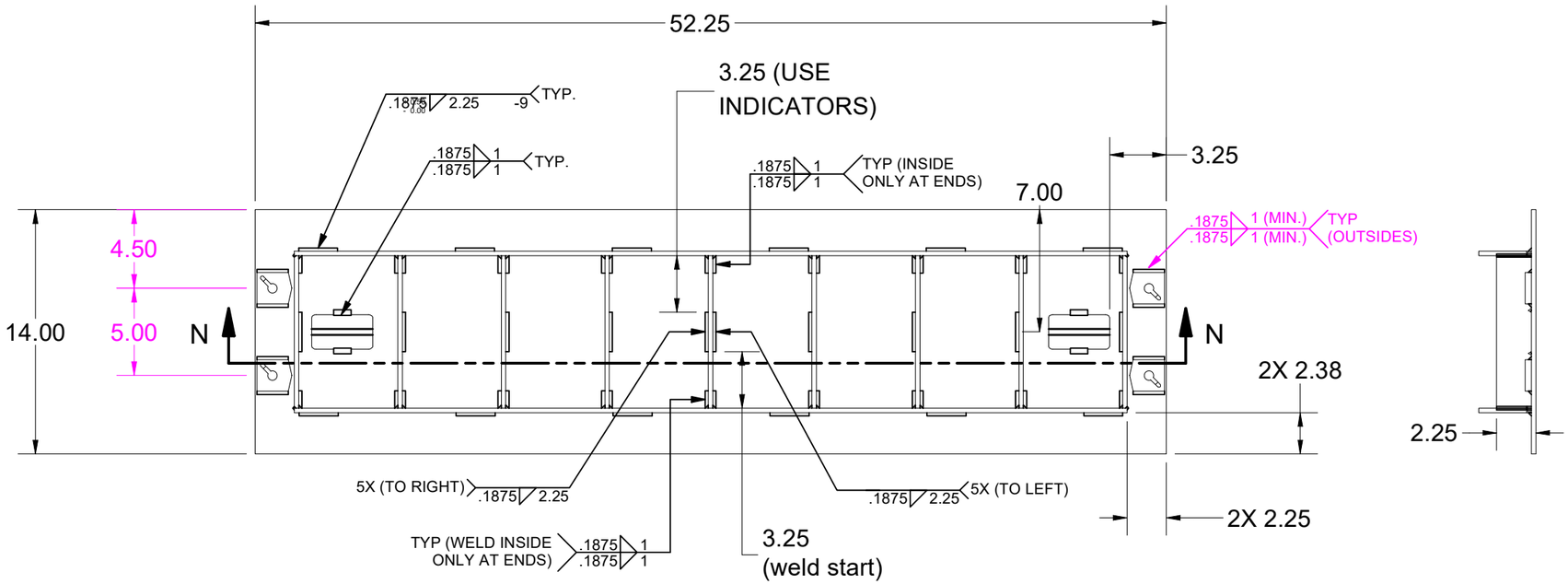

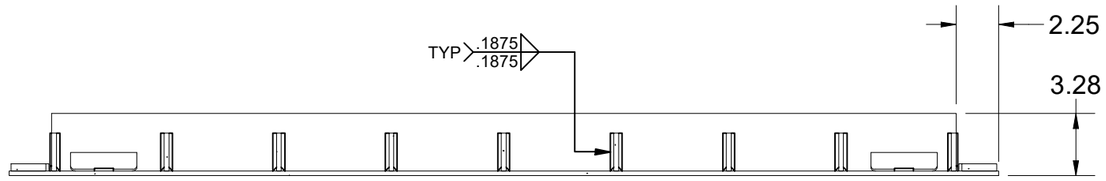

SECTION N-N

MATERIAL FINISH: Galvanized	450 E. GLENDALE AVE. SPARKS. NV 89431 775-352-2716 FAX: 755-358-8127 *JENSENMETALTECH.COM*	©2023 Jensen Precast- All rights reserved. All materials appearing as Jensen Precast documents and the like are proprietary work product and are protected under U.S. copyright and other laws. Unless in conjunction with business conducted with Jensen Precast, any use of Jensen Precast work product without express, written consent is prohibited, and recipient is prohibited from distributing any and all work product to non-approved third parties under penalty of civil action.	PART NUMBER & DESCRIPTION: 200069132 DAS1-T-4878-D-TRX-G-BD-PG&E-FVT	REV: G-1
MATERIAL SURFACE: TraxPlate™			WEIGHT: 85.69 Lbs CREATED: 10/6/2022	DRAWN BY: A.Billett MODIFIED: 9/11/2023	SHEET: 5

100002423_Submittal.idw

DESIGN NOTES
- FRAME SIDE & END: ASTM A36
- WELD: GRADE E70
- UNLESS SPECIFIED, WELD LENGTHS ARE FULL LENGTH

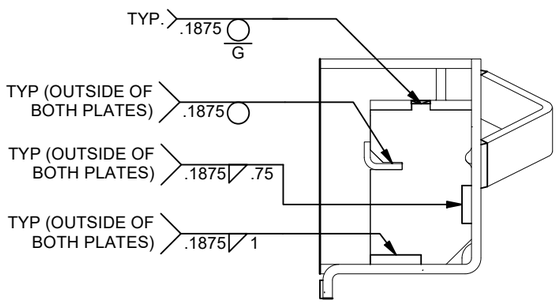

SECTION Q-Q
SCALE 1/3

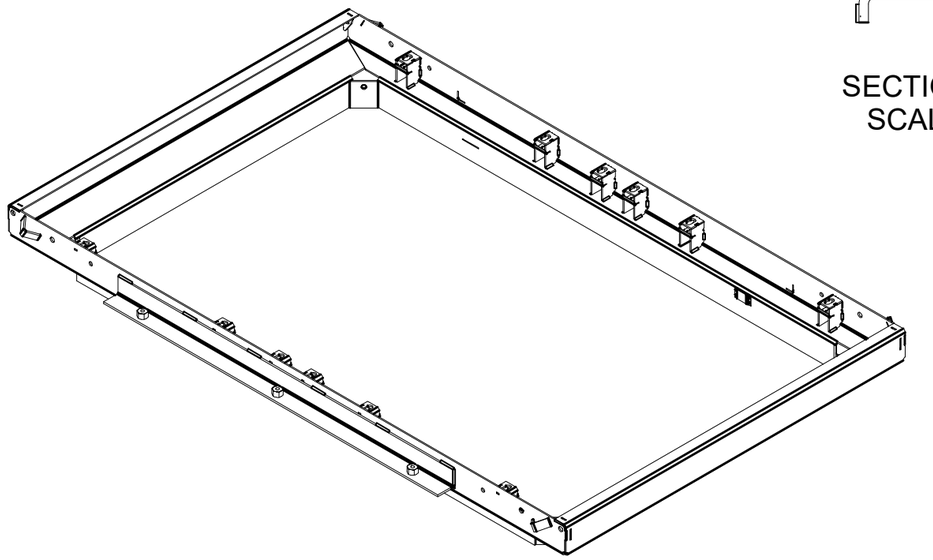



DETAIL R

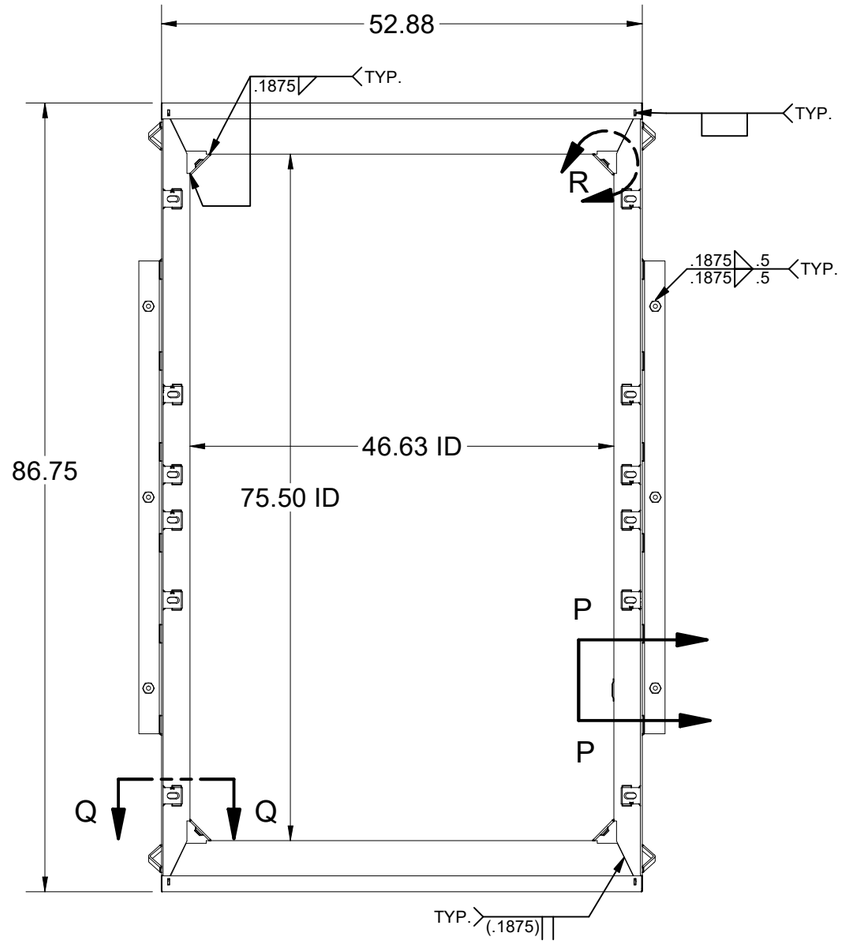

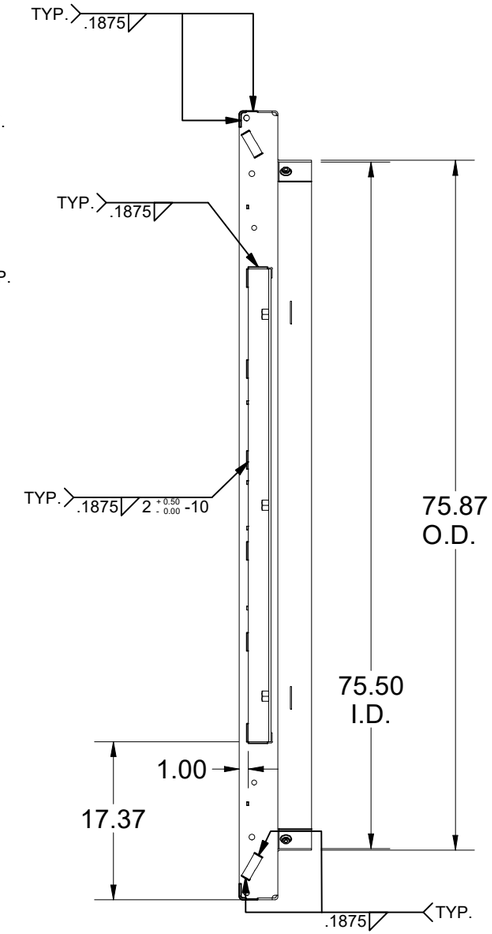

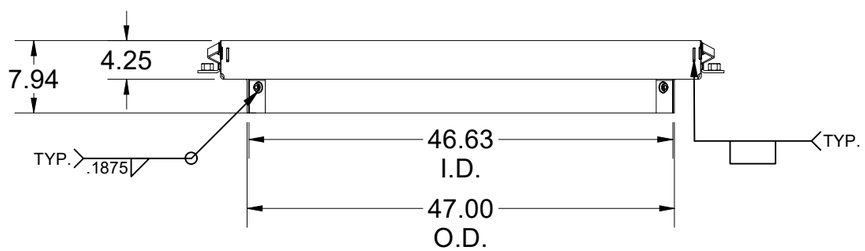

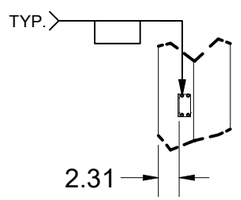

SECTION P-P

MATERIAL FINISH: Galvanized	JENSEN METALTECH 450 E. GLENDALE AVE. SPARKS. NV 89431 775-352-2716 FAX: 755-358-8127 *JENSENMETALTECH.COM*	©2023 Jensen Precast- All rights reserved. All materials appearing as Jensen Precast documents and the like are proprietary work product and are protected under U.S. copyright and other laws. Unless in conjunction with business conducted with Jensen Precast, any use of Jensen Precast work product without express, written consent is prohibited, and recipient is prohibited from distributing any and all work product to non-approved third parties under penalty of civil action.	PART NUMBER & DESCRIPTION: 200069142 FAS-4878-AH-G-GR-PG&E-OH08-TRANSFORMER FVT		REV: G-1
MATERIAL SURFACE: Smooth			WEIGHT: 216.22 Lbs	DRAWN BY: A.Billett	SHEET: 6
			CREATED: 10/6/2022	MODIFIED: 9/11/2023	

100002423_Submittal.idw

DESIGN NOTES
- STRUCTURAL TUBE: ASTM 500
- STRUCTURAL ANGLES: ASTM A36
- WELD: GRADE E70
- UNLESS SPECIFIED, WELD LENGTHS ARE FULL

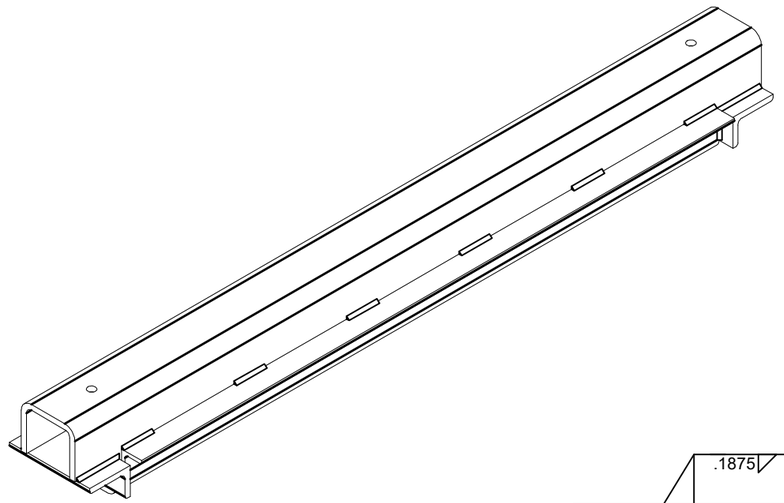

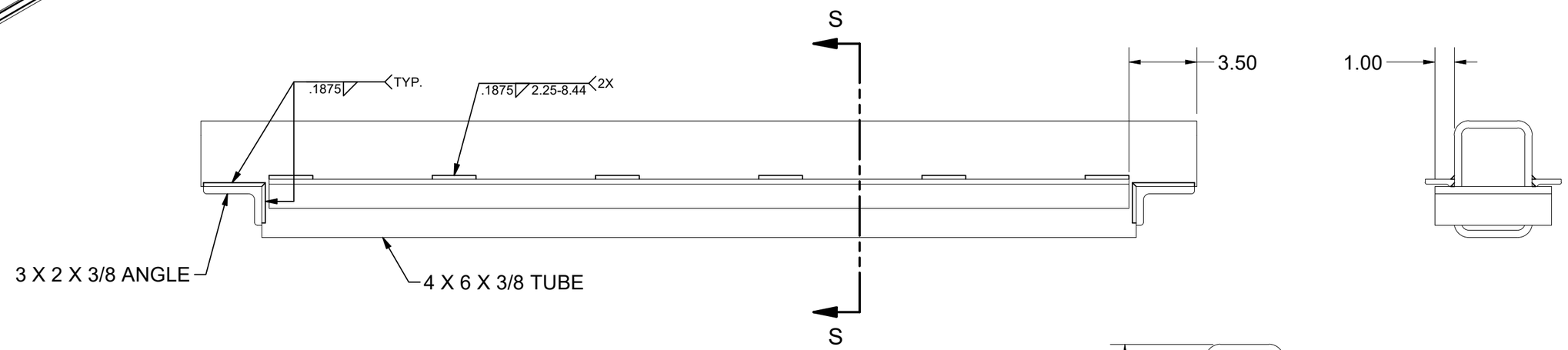

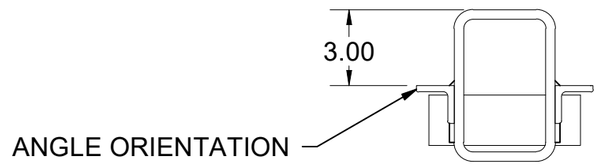

SECTION S-S
SCALE 1/6

MATERIAL FINISH: Galvanized	JENSEN METALTECH 450 E. GLENDALE AVE. SPARKS. NV 89431 775-352-2716 FAX: 755-358-8127 *JENSENMETALTECH.COM*	©2023 Jensen Precast- All rights reserved. All materials appearing as Jensen Precast documents and the like are proprietary work product and are protected under U.S. copyright and other laws. Unless in conjunction with business conducted with Jensen Precast, any use of Jensen Precast work product without express, written consent is prohibited, and recipient is prohibited from distributing any and all work product to non-approved third parties under penalty of civil action.	PART NUMBER & DESCRIPTION: 200068767 Support Beam 57.25in W Beam right & left 4878 FVT		REV: G-1
MATERIAL SURFACE: Smooth			WEIGHT: 113.72 Lbs	DRAWN BY: A.Billett	SHEET: 7
			CREATED: 10/6/2022	MODIFIED: 9/11/2023	

100002423_Submittal.idw