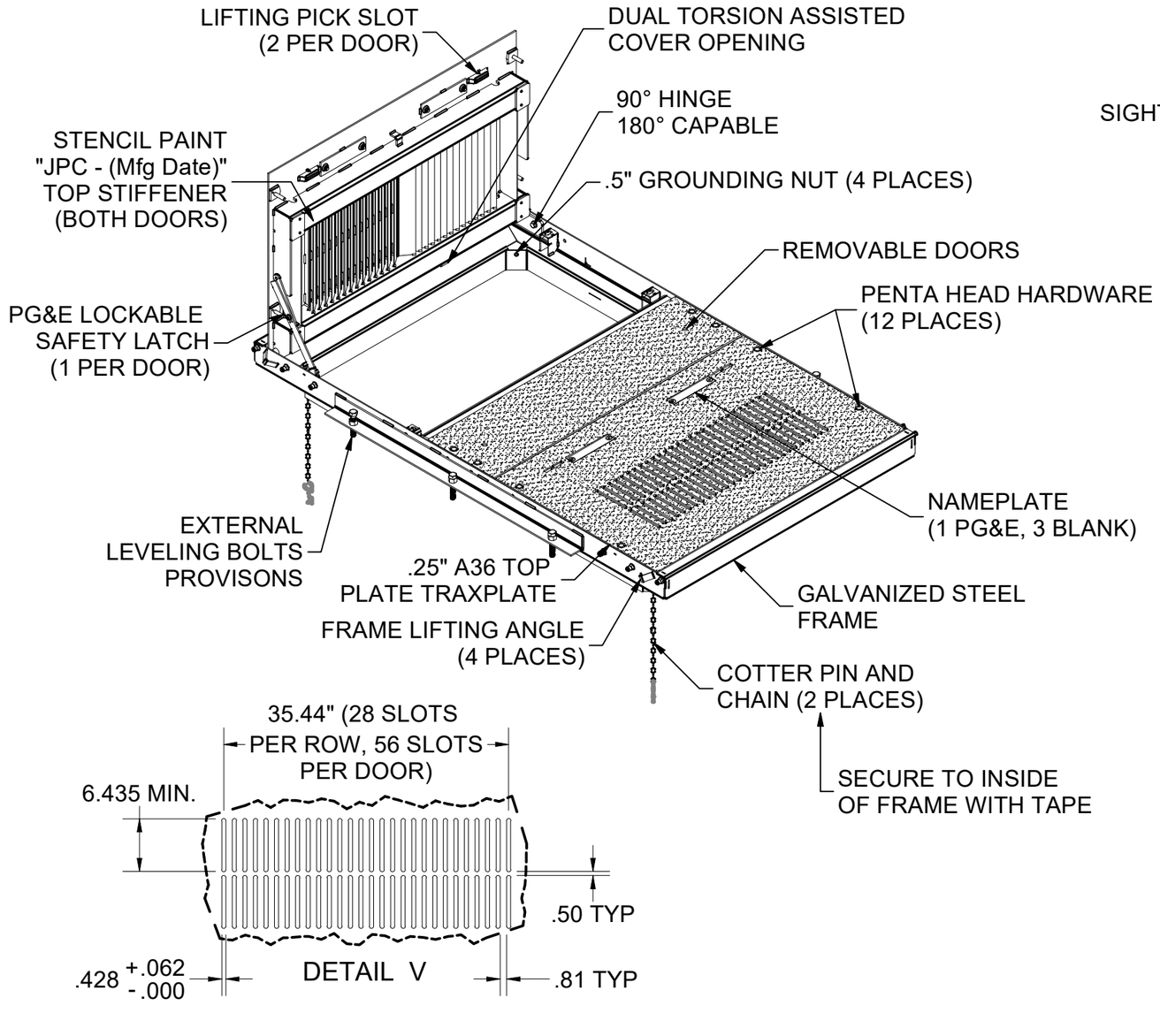

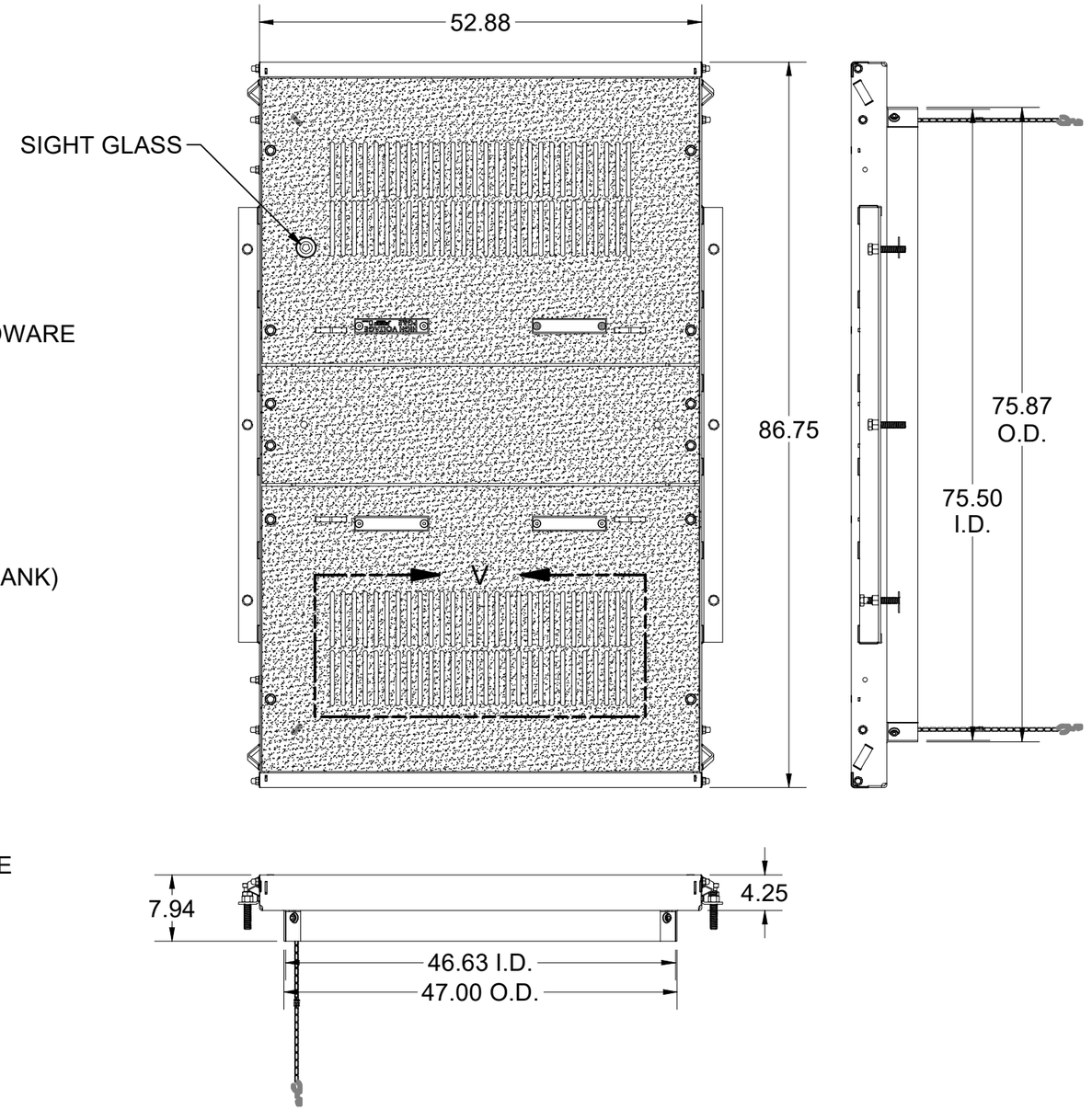

TYPICAL VENT SLOT AREA = 2.69 sq in to 3.17 sq in
MINIMUM TOTAL OPEN AREA PER ASSEMBLY = 301.1 sq in
(AFTER TRAX AND GALV PROCESS)

LOADING CRITERIA: PG&E FVT

SURFACE:	TraxPlate™	FINISH:	Galvanized
WEIGHT:	1137.48 lbs	MARKING:	

Infrastructure
JENSEN
527 Dunn Circle, Sparks, NV 89431
775-352-2716 FAX: 755-358-8127
JENSENMETALTECH.COM

©2026 Jensen Infrastructure - All rights reserved.
All materials appearing as Jensen Infrastructure documents and the like are proprietary work product and are protected under U.S. copyright and other laws. Unless in conjunction with business conducted with Jensen Infrastructure , any use of Jensen Infrastructure work product without express, written consent is prohibited, and recipient is prohibited from distributing any and all work product to non-approved third parties under penalty of civil action.
This product shall only be produced in a Jensen Infrastructure facility.

DESCRIPTION: CAS2-4878-AH-TRX-G-SG-GR-PG&E-OH08-TRANSFORMER FVT

48x78 Cover Assembly (Loading Criteria Per N/A, , Steel, Hinged, Pickhole, TraxPlate™, Galvanized , Sight Glass, PG&E TRANSFORMER FVT) 08

PART NUMBER:	100002423	DRAWN BY:	R. Dohr
CREATED:	10/6/2022	MODIFIED:	2/2/2026

REV: G-2-2

SHEET: 1

100002423.idw

BILL OF MATERIALS

ITEM	ITEM QTY	QTY	PART NUMBER	DESCRIPTION	PART NAME
1	2	2	200068767	Support Beam 57.25in W Beam right & left 4878 FVT	200068767
2	1	1	200069140	DAS2-T-4878-H-TRX-G-CL-SG-PG&E-TRANSFORMER FVT	200069140
3	1	1	200069136	DAS2-T-4878-H-TRX-G-BD-PG&E-TRANSFORMER FVT	200069136
4	1	1	200069132	DAS1-T-4878-D-TRX-G-BD-PG&E-FVT	200069132
5	1	1	200069142	FAS-4878-AH-G-GR-PG&E-OH08-TRANSFORMER FVT	200069142
6	12	12	200072509	Square Strut Channel Nut, 1/2"-13 Thread Size	200072509
7	2	2	200069493	HINGE ASSY PG&E FVT LEFT .5625	200069493
8	2	2	200069179	HINGE ASSY PG&E FVT RIGHT .4375	200069179
9	2	2	200068660	PG&E FVT SAFETY LATCH	200068660
10	2	2	100041563	16" CHAIN SAFETY W/WASHER	100041563
11	10	10	100026256	LOW-STRENGTH STEEL FLANGE NUT, 1/2" - 13 THREAD SIZE	100026256
12	24	24	100011418	WASHER FLAT 1/2 NARROW ZINC	100011418
13	2	2	100008010	BOLT HEX 1/2-13 UNC 1.75 ZINC	100008010
14	10	10	100007939	CAP VINYL .467 X 1/2	100007939
15	1	1	100007928	SIGHT GLASS	100007928
16	8	8	100007925	PAD INSULATING POLYURETHANE LARGE 4.00 X 2.75	100007925
17	2	2	100007896	TORSION HEX ROD 9/16 X 36 RAW	100007896
18	16	16	100007882	Rivet Blind Grip .1875" Large Domed Head Range-0.376-0.5" Steel	100007882
19	8	8	100007873	BOLT SHCS 3/8-16 X 1-1/4 PLATED	100007873
20	4	4	100007869	BOLT SHCS 1/2-13 X 1-3/4 SS	100007869
21	8	8	100007859	RIVET NUT 3/8-16 FLAT KNURLED	100007859
22	12	12	100007749	BOLT PENTA 1/2-13 UNC 0.875 HEAD 2.25L SS DRILLED	100007749
23	8	8	100007733	Bolt Socket Flat Countersunk Head - 1/2-13 UNC - Grade 5 - Zinc - FT - 1"	100007733
24	2	2	100007726	TORSION HEX ROD 7/16 X 36 RAW	100007726
25	2	2	100007682	OFFSET SPRING MOUNT .562	100007682
26	2	2	100007670	SPRING MOUNT ASSY .438	100007670
27	3	3	100007562	NAME PLATE PLEXI PG&E	100007562
28	2	2	100007492	HEX NUT NYLOCK - 1/2-13 UNC - GR5 - ZINC	100007492
29	1	1	100005058	NAME PLATE CAST ALUM PG&E - HIGH VOLTAGE	100005058
30	4	4	100003823	Hex Bolt 1/2-13 UNC ZINC - PT - 1.5"	100003823
31	6	6	100003782	HEX COIL BOLT 3/4 X 4 PLAIN	100003782
32	2	2	100003484	Hex Bolt 1/2-13 UNC ZINC - FT - 0.75"	100003484

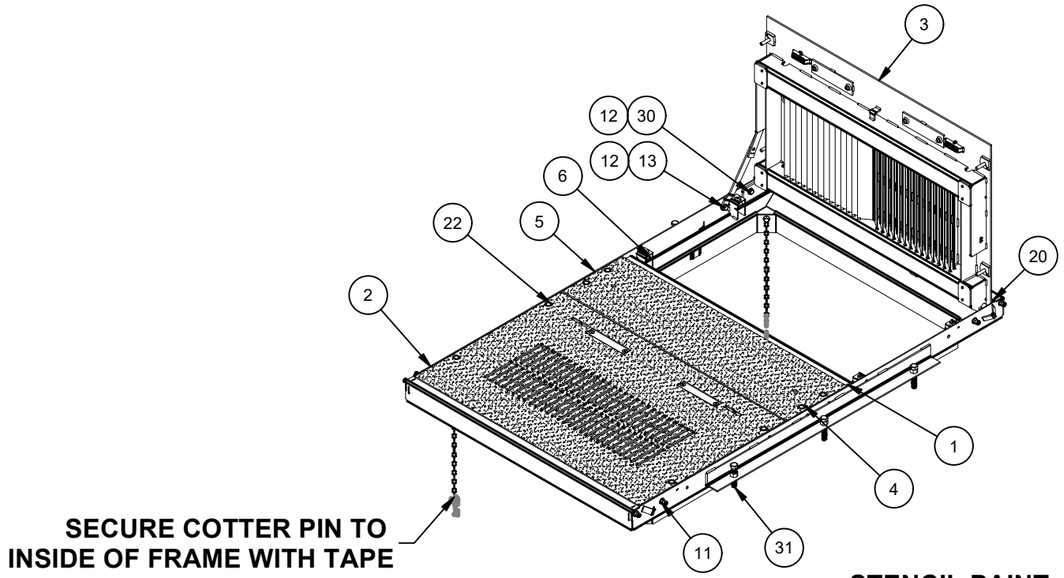

SECURE COTTER PIN TO INSIDE OF FRAME WITH TAPE

STENCIL PAINT "JPC - (Mfg Date)" TOP STIFFENER (BOTH DOORS)

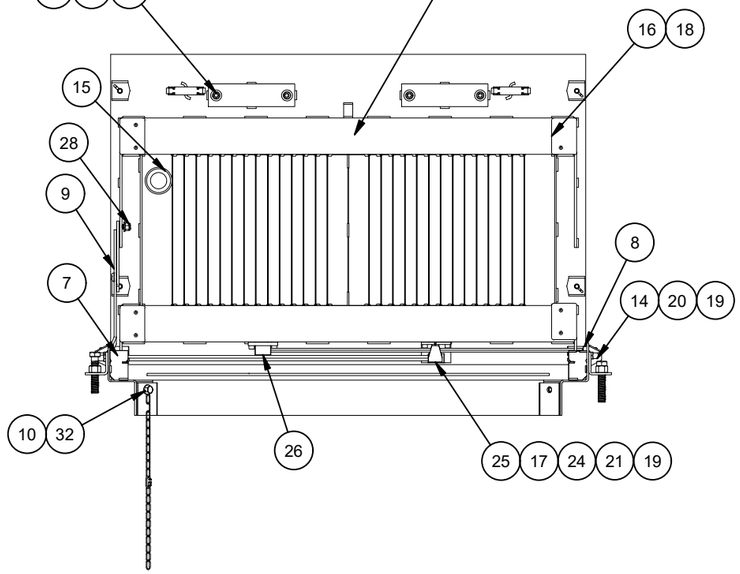

INSPECT SLOT DIMENSIONS PRIOR TO GALV, AND AFTER GALV
MINIMUM SLOT WIDTH AFTER TRAX-PLATING, BUT BEFORE GALV = 0.446"
MINIMUM SLOT WIDTH AFTER TRAX-PLATING AND GALV = 0.428"

REVISION HISTORY		
REV	DESCRIPTION	DATE
A-1	1ST ARTICLE PRODUCTION RELEASE	10/6/22
B-1	CHANNELS INCREASED TO 5/16" THK, DUE TO INHOUSE LOAD TESTING RESULTS	10/26/22
C-1	UPDATED MODELS TO REFLECT PG&E AUDIT RESULTS	12/6/22
D-1	INCREASED SLOTS SIZE FOR TRAX AND GALV BUILD UP AND UPDATED WELD CALLOUTS TO MATCH MANUFACTURING	3/13/23
E-1	UPDATED NOTES AND WELD CALLOUTS PER PG&E COMMENTS DURING TESTING; CHANGED TO 2.25" COVER BOLTS; ADDED VISUAL WELDS AND MORE WELD INDICATOR NOTCHES FOR MFG PRECISION	6/5/23
F-1	UPDATED LOUVER END WELDS FROM 1" TO 1/2" LG PER PG&E REQUEST	8/17/2023
G-1	ADDED UPDATED SLOT TOLERANCES PER PG&E REQUEST; ADDED STENCIL NOTE AND TAPE NOTE FOR HAIRPIN COTTER	9/11/2023
G-2	REPLACED OBSOLETE WASHER 100025986 WITH 100011418	7/28/25
G-2-2	REPLACED J CONE BASE WITH CAM TOWER BASE	2/2/2026

MATERIAL FINISH: Galvanized

MATERIAL SURFACE: TraxPlate™

Infrastructure JENSEN

527 Dunn Circle, Sparks, NV 89431
775-352-2716 FAX: 755-358-8127
JENSENMETALTECH.COM

©2026 Jensen Infrastructure - All rights reserved. All materials appearing as Jensen Infrastructure documents and the like are proprietary work product and are protected under U.S. copyright and other laws. Unless in conjunction with business conducted with Jensen Infrastructure , any use of Jensen Infrastructure work product without express, written consent is prohibited, and recipient is prohibited from distributing any and all work product to non-approved third parties under penalty of civil action. This product shall only be produced in a Jensen Infrastructure facility.

PART NUMBER & DESCRIPTION: 100002423 — CAS2-4878-AH-TRX-G-SG-GR-PG&E-OH08-TRANSFORMER FVT

REV: G-2-2

WEIGHT: 1137.48 Lbs

DRAWN BY: R. Dohr

SHEET: 2

CREATED: 10/6/2022

MODIFIED: 2/2/2026

100002423.idw

BILL OF MATERIALS

ITEM	ITEM QTY	QTY	PART NUMBER	DESCRIPTION	PART NAME
1	2	33.947 lbmass	200069890	Frame Component - Leveling Bar	200069890
2	4	2.200 lbmass	100007734	Frame Component Steel	200069144
3	2	89.906 lbmass	100007734	Frame Component Steel Frame Side, Adjustable	200069146
4	4	4	200018691	FRAME BOLT DOUBLER SLOT	200018691
5	2	76.452 lbmass	100007734	Frame Component Steel Frame End, Adjustable	200069145
6	12	12	200069094	STANDOFF BOLTING PLATFORM	200069094
7	12	5.403 lbmass	100007734	SQUARE NUT BRACKET-CUSTOM PG&E FVT	200069159
8	12	3.755 lbmass	100007734	STANDOFF SIDEWALL	200069158
9	4	4	100007728	NUT SELF-CLINCH 1/2-13 S-0813-1 RAW	100007728
10	1	1	100007700	SIGHT GLASS LIGHT CLIP	100007700
11	4	4	100007641	FRAME LIFTING BRACKET	100007641
12	6	6	100007011	HEX COIL NUT 3/4-4.5 PLAIN	100007011

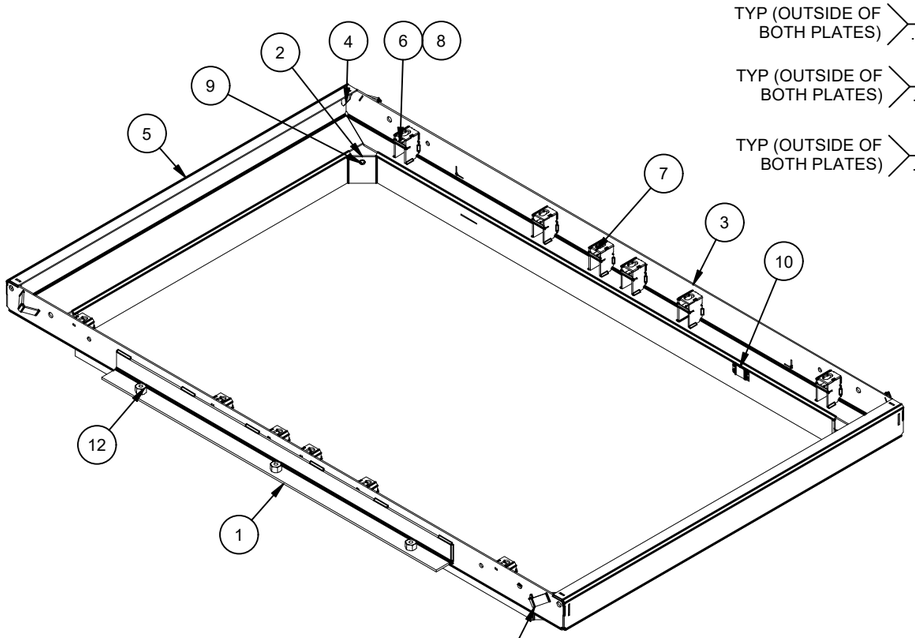

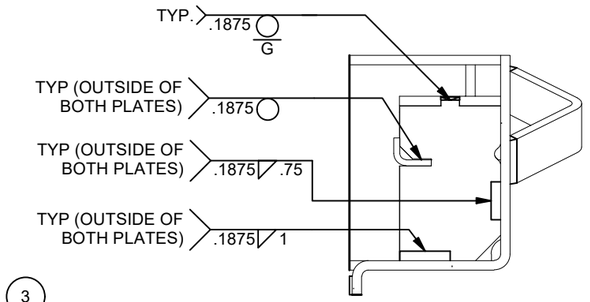

SECTION C-C
SCALE 1/3

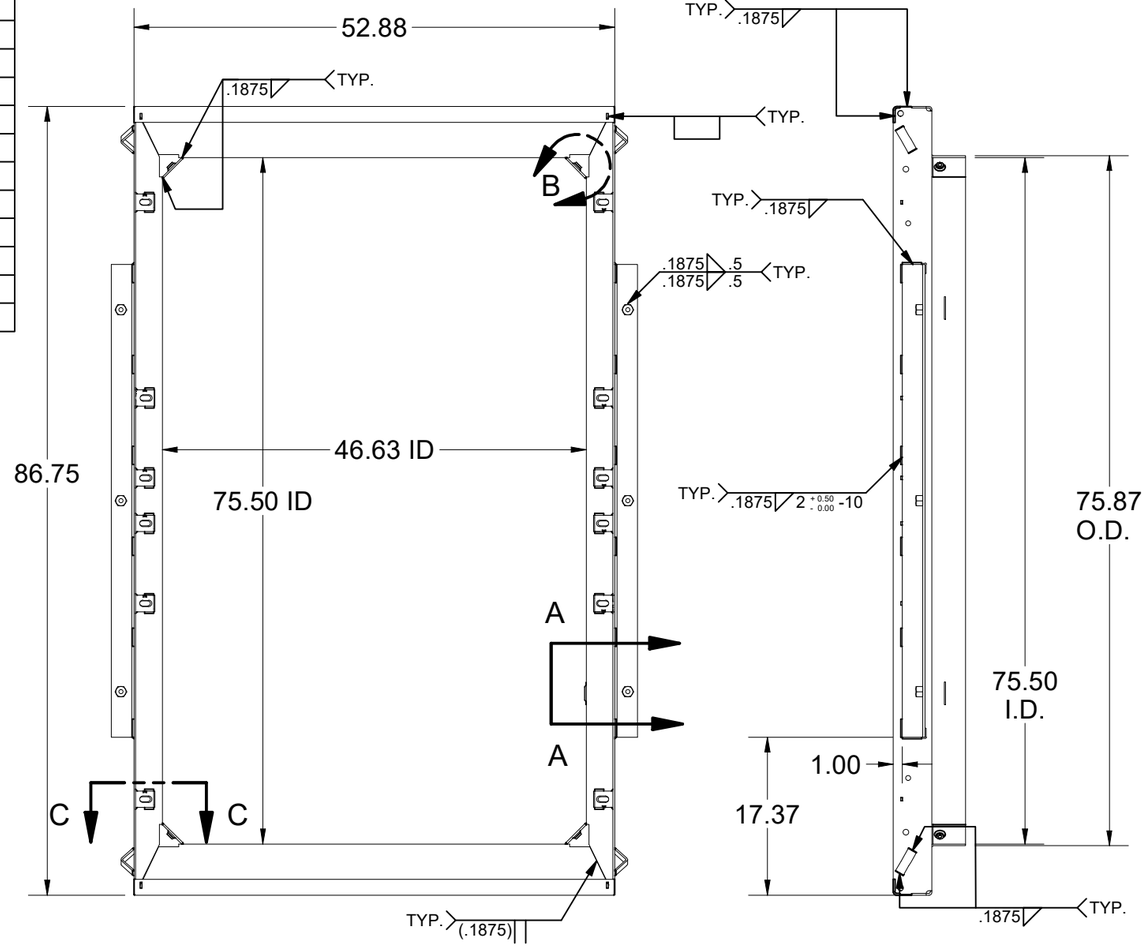

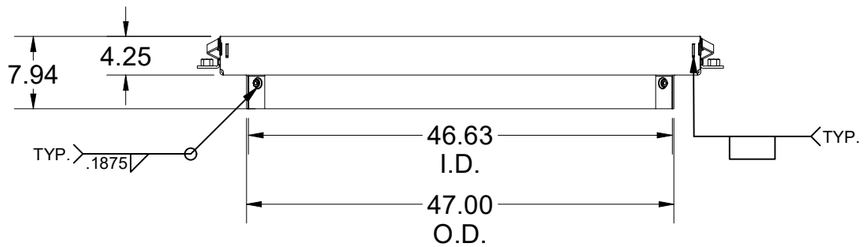

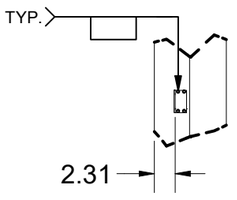

SECTION A-A



DETAIL B

MATERIAL FINISH: Galvanized	Jensen Infrastructure 527 Dunn Circle, Sparks, NV 89431 775-352-2716 FAX: 755-358-8127 *JENSENMETALTECH.COM*	©2026 Jensen Infrastructure - All rights reserved. All materials appearing as Jensen Infrastructure documents and the like are proprietary work product and are protected under U.S. copyright and other laws. Unless in conjunction with business conducted with Jensen Infrastructure , any use of Jensen Infrastructure work product without express, written consent is prohibited, and recipient is prohibited from distributing any and all work product to non-approved third parties under penalty of civil action. This product shall only be produced in a Jensen Infrastructure facility.	PART NUMBER & DESCRIPTION: 200069142 FAS-4878-AH-G-GR-PG&E-OH08-TRANSFORMER FVT — REV: G-2-2
MATERIAL SURFACE: Smooth			WEIGHT: 216.22 Lbs — DRAWN BY: R. Dohr — SHEET: 3
			CREATED: 10/6/2022 — MODIFIED: 2/2/2026

100002423.idw

BILL OF MATERIALS

ITEM	ITEM QTY	QTY	PART NUMBER	DESCRIPTION	PART NAME
1	2	2.218 lbmass	100007807	Door Component Steel Stiffener, Plate	200069154
2	28	57.996 lbmass	100007807	Door Component Steel Stiffener, Bar	200069153
3	2	6.261 lbmass	100007734	Door Component Steel Stiffener, Bar	200069152
4	2	7.084 lbmass	100007735	Door Component Steel Side Bar	200069151
5	2	2.661 lbmass	100007735	Door Component Steel Side Bar	200069150
6	1	110.497 lbmass	100007735	Door Component Steel Plate, Bottom Nameplate	200069141
7	2	89.648 lbmass	100007838	Door Component Steel Channel	200069137
9	1	1	100041280	SIGHT GLASS BUSHING STL	100041280
10	1	2	100007735	PG&E NAME PLATE BACKING PLATE	100021175
11	2	2	100007916	CLIP PICK HOLE 304SS	100007916
12	4	4	100007860	NUT SELF-CLINCH 1/2-13 CLS-0813-1 SS	100007860
13	2	2	100007697	LIFT COVER STL	100007697
14	1	1	100007647	LIFTING BRACKET STEEL LEAF	100007647
15	4	4	100007675	CAM BASE	100007675

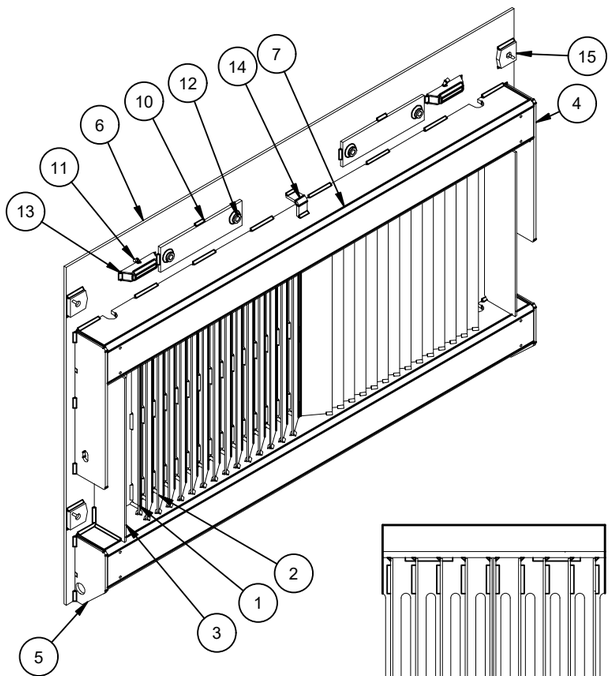

EDGE OF SLOT TO FLANGE EDGE. (200069153)

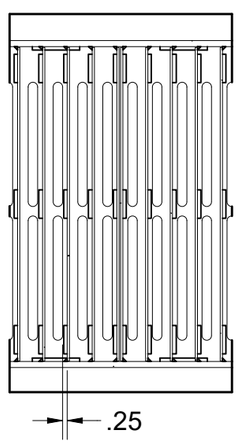

SECTION F-F

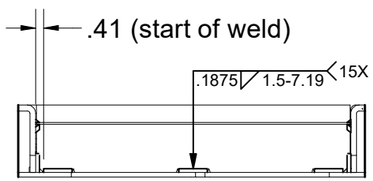

SECTION H-H

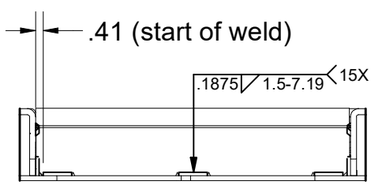

SECTION G-G

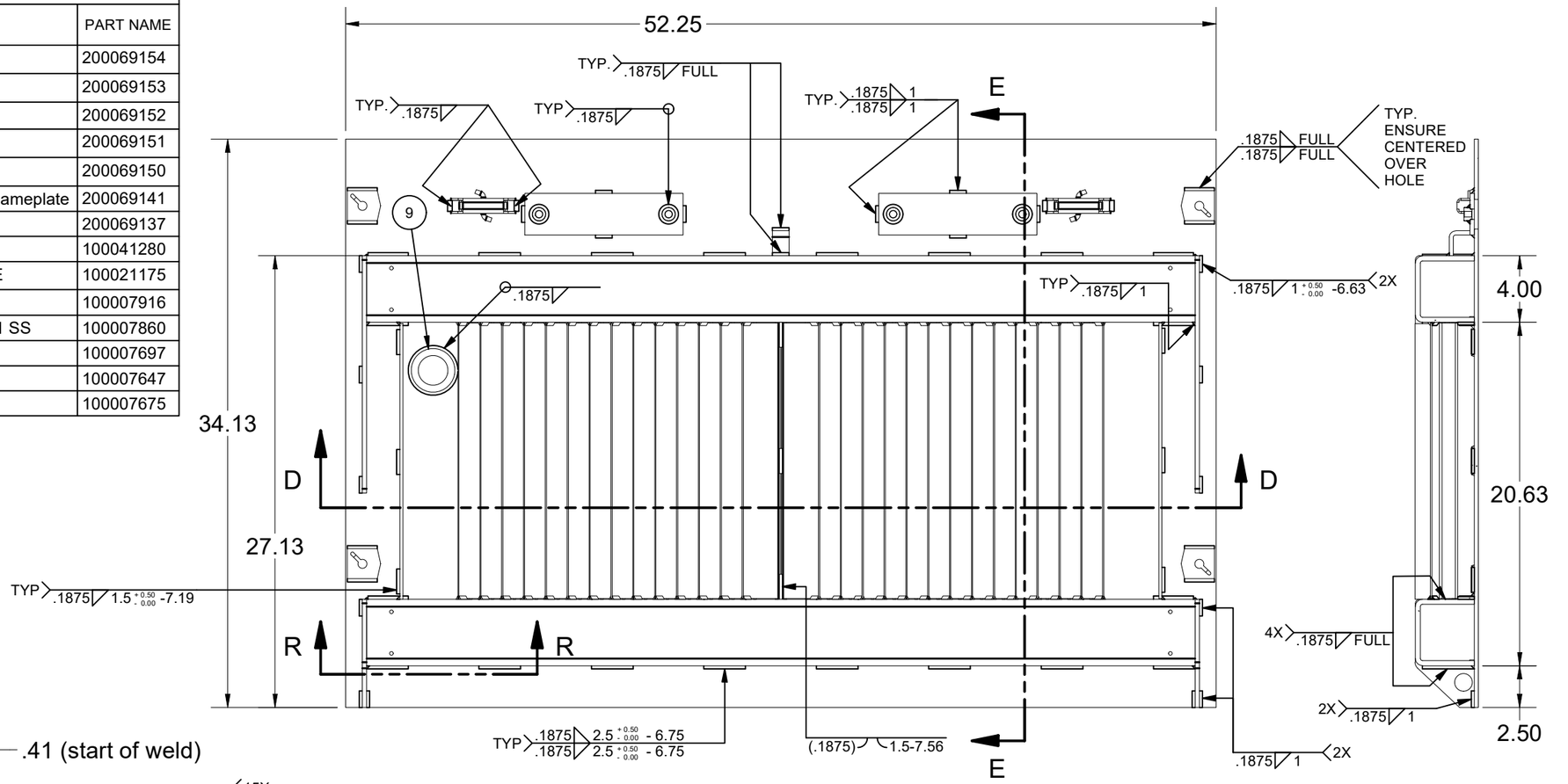

SECTION E-E

USE NOTCHES FOR HOLDING WELDING PATTERN



SECTION R-R
SCALE 1/8

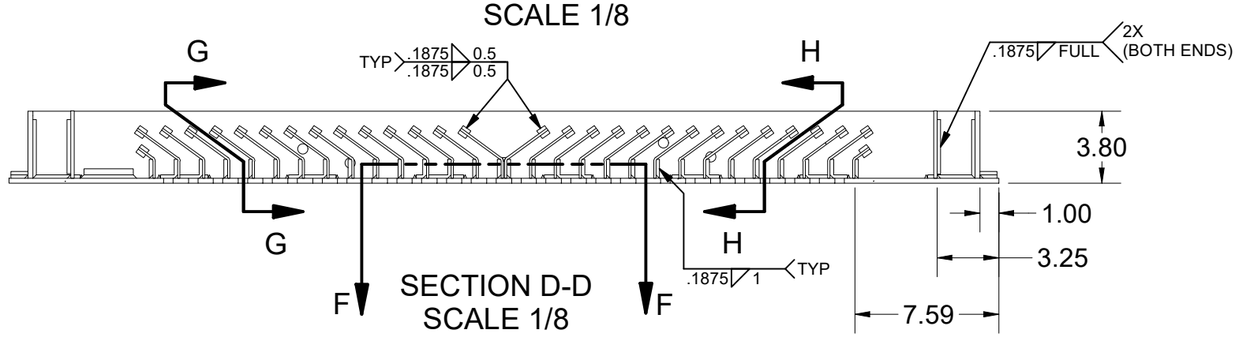

SECTION D-D
SCALE 1/8

MATERIAL FINISH: Galvanized	Infrastructure JENSEN 527 Dunn Circle, Sparks, NV 89431 775-352-2716 FAX: 755-358-8127 *JENSENMETALTECH.COM*	©2026 Jensen Infrastructure - All rights reserved. All materials appearing as Jensen Infrastructure documents and the like are proprietary work product and are protected under U.S. copyright and other laws. Unless in conjunction with business conducted with Jensen Infrastructure , any use of Jensen Infrastructure work product without express, written consent is prohibited, and recipient is prohibited from distributing any and all work product to non-approved third parties under penalty of civil action. This product shall only be produced in a Jensen Infrastructure facility.	PART NUMBER & DESCRIPTION: 200069140 DAS2-T-4878-H-TRX-G-CL-SG-PG&E-TRANSFORMER FVT REV: G-2-2
MATERIAL SURFACE: TraxPlate™			WEIGHT: 284.46 Lbs DRAWN BY: R. Dohr CREATED: 10/6/2022 MODIFIED: 2/2/2026 SHEET: 4

100002423.idw

BILL OF MATERIALS

ITEM	UNIT QTY	QTY	PART NUMBER	DESCRIPTION	PART NAME
1	2.071 lbmass	57.996 lbmass	100007807	Door Component Steel Stiffener, Bar	200069153
2	3.131 lbmass	6.261 lbmass	100007734	Door Component Steel Stiffener, Bar	200069152
3	44.824 lbmass	89.648 lbmass	100007838	Door Component Steel Channel	200069137
5	110.831 lbmass	110.831 lbmass	100007735	Door Component Steel Plate, Top Nameplate	200069138
6	1.331 lbmass	2.661 lbmass	100007735	Door Component Steel Side Bar	200069150
7	1.109 lbmass	2.218 lbmass	100007807	Door Component Steel Stiffener, Plate	200069154
8	3.542 lbmass	7.084 lbmass	100007735	Door Component Steel Side Bar	200069151
9	1	2	100007916	CLIP PICK HOLE 304SS	100007916
10	1	4	100007728	NUT SELF-CLINCH 1/2-13 S-0813-1 RAW	100007728
11	1	2	100007697	LIFT COVER STL	100007697
12	1	1	100007647	LIFTING BRACKET STEEL LEAF	100007647
13	1	2	100007735	PG&E NAME PLATE BACKING PLATE	100021175
14	1	4	100007675	CAM BASE	100007675

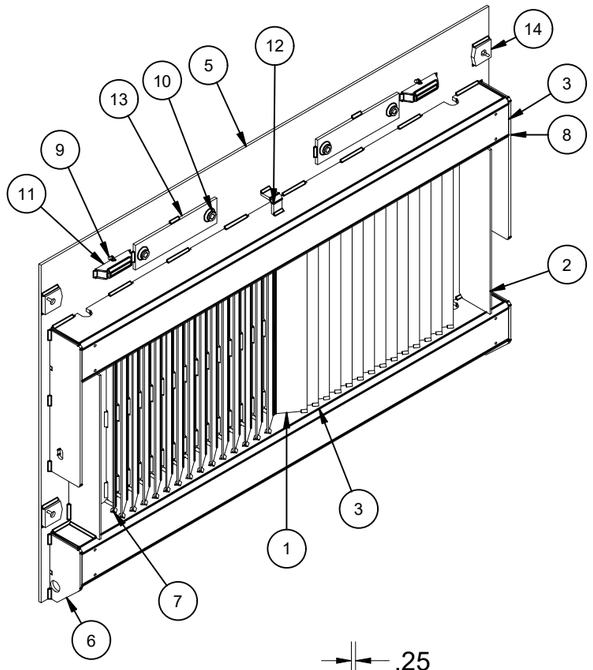

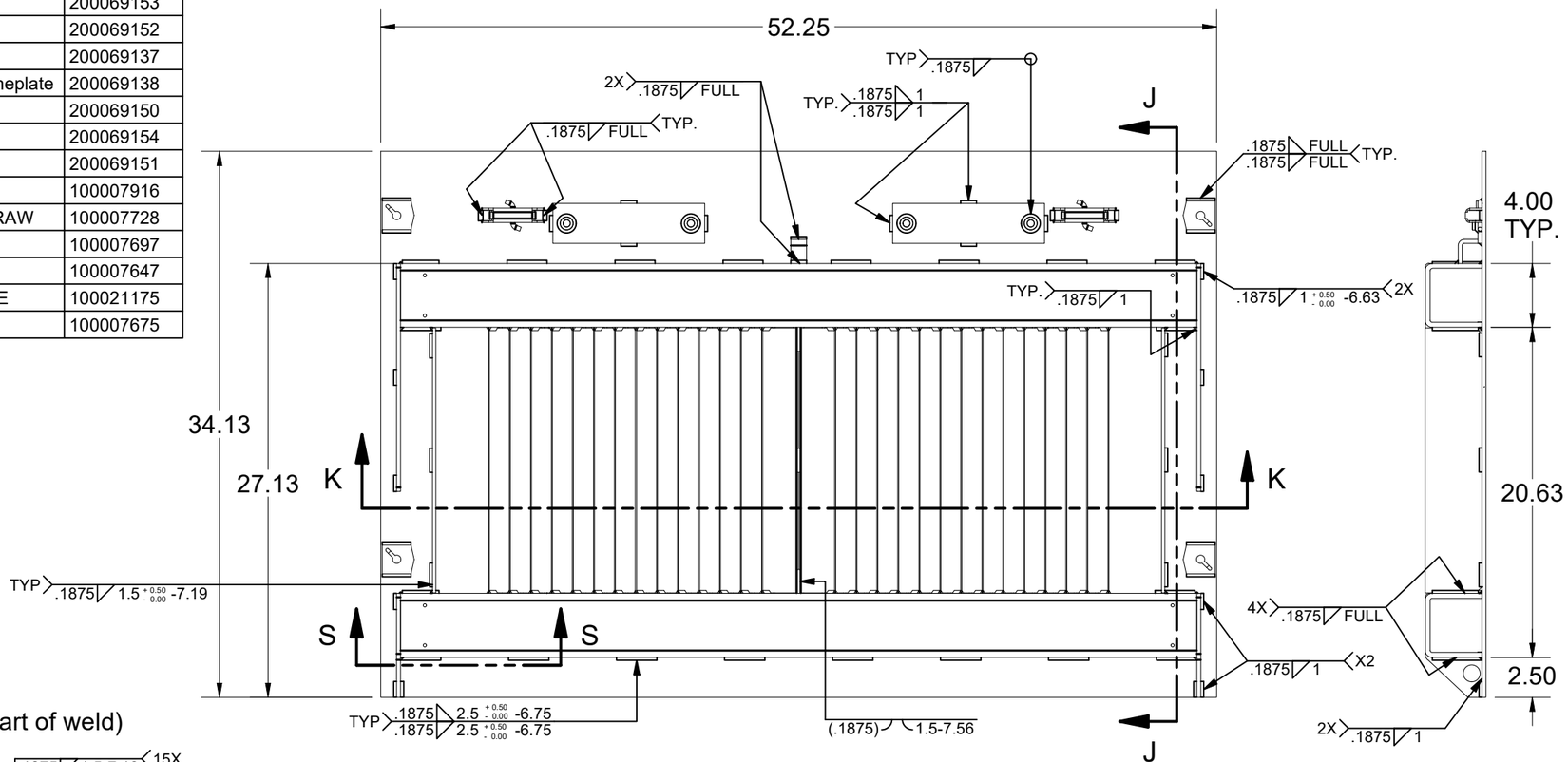

SECTION J-J

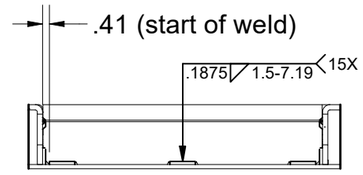

SECTION M-M

USE NOTCHES FOR HOLDING WELDING PATTERN



SECTION S-S

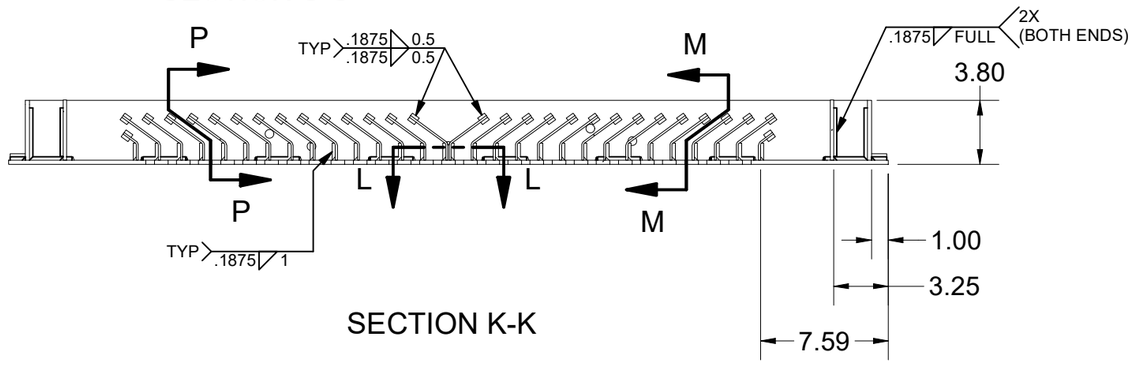

SECTION K-K

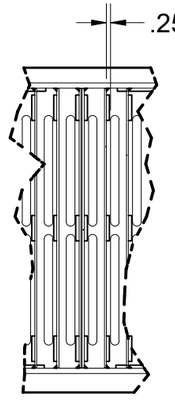

EDGE OF SLOT TO FLANGE EDGE. (200069153)

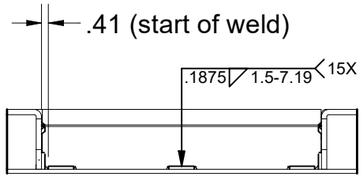

SECTION P-P

MATERIAL FINISH: Galvanized	Infrastructure JENSEN 527 Dunn Circle, Sparks, NV 89431 775-352-2716 FAX: 755-358-8127 *JENSENMETALTECH.COM*	©2026 Jensen Infrastructure - All rights reserved. All materials appearing as Jensen Infrastructure documents and the like are proprietary work product and are protected under U.S. copyright and other laws. Unless in conjunction with business conducted with Jensen Infrastructure , any use of Jensen Infrastructure work product without express, written consent is prohibited, and recipient is prohibited from distributing any and all work product to non-approved third parties under penalty of civil action. This product shall only be produced in a Jensen Infrastructure facility.	PART NUMBER & DESCRIPTION: 200069136 DAS2-T-4878-H-TRX-G-BD-PG&E-TRANSFORMER FVT — REV: G-2-2
MATERIAL SURFACE: TraxPlate™			WEIGHT: 284.26 Lbs — DRAWN BY: R. Dohr — SHEET: 5
			CREATED: 10/6/2022 — MODIFIED: 2/2/2026

100002423.idw

BILL OF MATERIALS

ITEM	UNIT QTY	QTY	PART NUMBER	DESCRIPTION	PART NAME
1	51.508 lbmass	51.508 lbmass	100007735	Door Component Steel Plate, Top	200069134
2	1	2	200018206	PICK HOLE ANGLE	200018206
3	10.230 lbmass	20.460 lbmass	100007735	Door Component Steel Side Bar	200069133
4	1.243 lbmass	11.191 lbmass	100007735	Door Component Steel Stiffener, Bar	200069135
5	1	4	100007675	CAM BASE	100007675

USE INDICATOR NOTCHES FOR HOLDING WELD PATTERNS

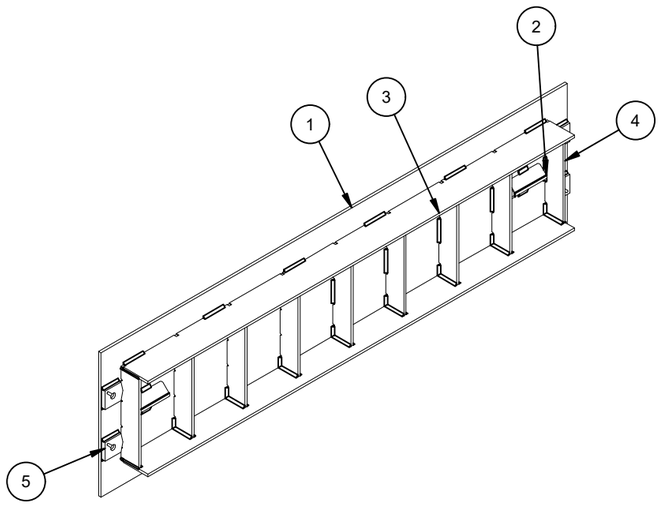

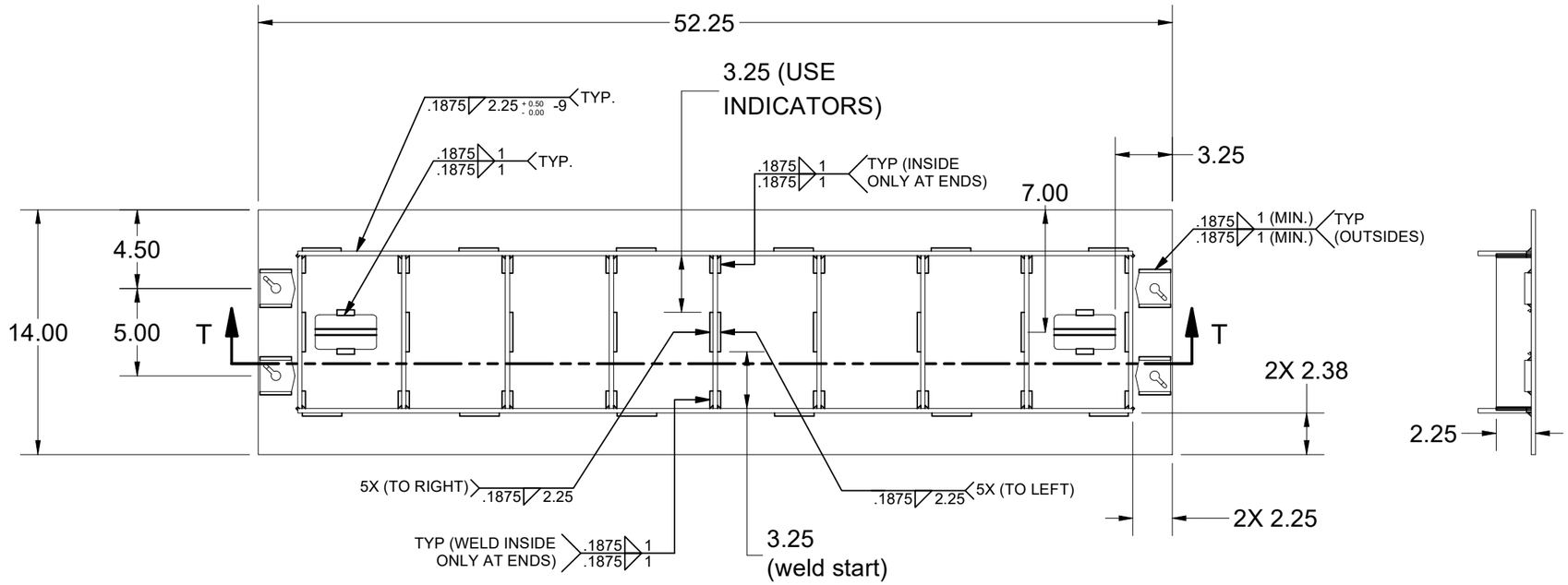

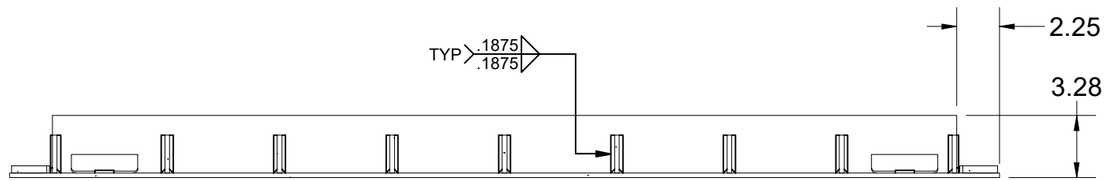

SECTION T-T

MATERIAL FINISH: Galvanized	Infrastructure JENSEN 527 Dunn Circle, Sparks, NV 89431 775-352-2716 FAX: 755-358-8127 *JENSENMETALTECH.COM*	©2026 Jensen Infrastructure - All rights reserved. All materials appearing as Jensen Infrastructure documents and the like are proprietary work product and are protected under U.S. copyright and other laws. Unless in conjunction with business conducted with Jensen Infrastructure , any use of Jensen Infrastructure work product without express, written consent is prohibited, and recipient is prohibited from distributing any and all work product to non-approved third parties under penalty of civil action. This product shall only be produced in a Jensen Infrastructure facility.	PART NUMBER & DESCRIPTION: 200069132 DAS1-T-4878-D-TRX-G-BD-PG&E-FVT
MATERIAL SURFACE: TraxPlate™			WEIGHT: 85.69 Lbs / DRAWN BY: R. Dohr / CREATED: 10/6/2022 / MODIFIED: 2/2/2026

REV: G-2-2

SHEET: 6

100002423.idw

BILL OF MATERIALS

ITEM	ITEM QTY	QTY	PART NUMBER	DESCRIPTION	PART NAME
1	1	51.250 in	200068766	STRUCTURAL STEEL RECTANGULAR TUBE - 6 x 4 x 3/8	200068766
2	2	12.000 in	100005205	STRUCTURAL ANGLE UNEQUAL - A36 STEEL - L 3 x 2 x 3/8	100005205
3	2	88.500 in	100005184	STRUCTURAL ANGLE EQUAL - A36 STEEL - L 1.5 x 1.5 x 1/4	100005184

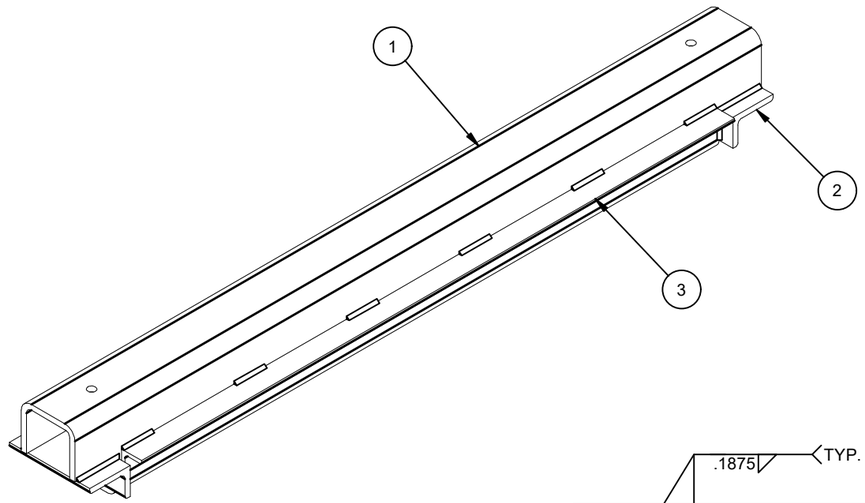

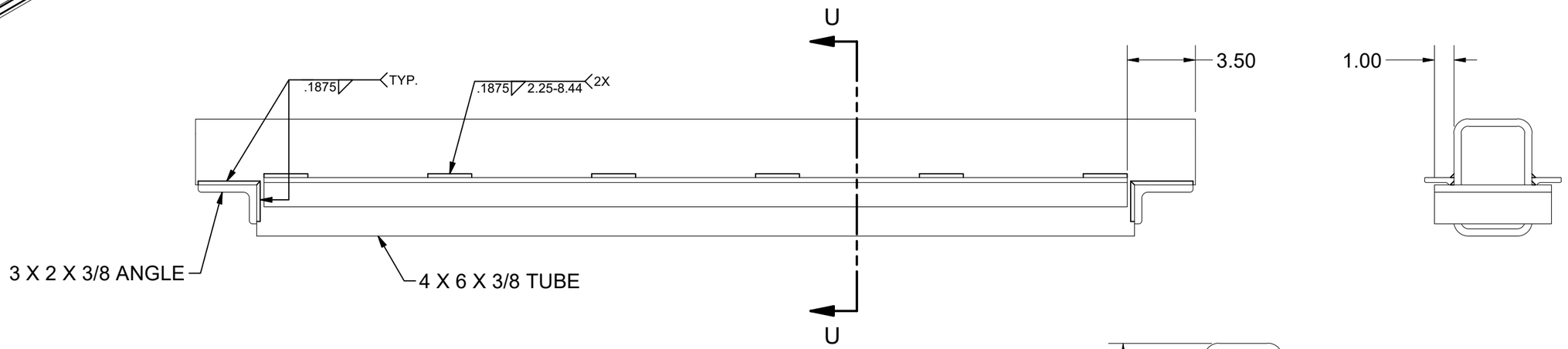

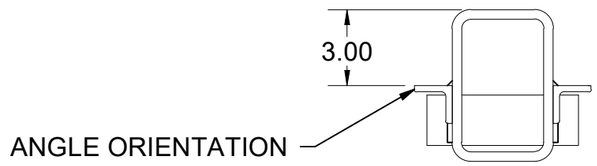

SECTION U-U
SCALE 1/6

100002423.idw

MATERIAL FINISH: Galvanized	Infrastructure JENSEN 527 Dunn Circle, Sparks, NV 89431 775-352-2716 FAX: 755-358-8127 *JENSENMETALTECH.COM*	©2026 Jensen Infrastructure - All rights reserved. All materials appearing as Jensen Infrastructure documents and the like are proprietary work product and are protected under U.S. copyright and other laws. Unless in conjunction with business conducted with Jensen Infrastructure , any use of Jensen Infrastructure work product without express, written consent is prohibited, and recipient is prohibited from distributing any and all work product to non-approved third parties under penalty of civil action. This product shall only be produced in a Jensen Infrastructure facility.	PART NUMBER & DESCRIPTION: 200068767 Support Beam 57.25in W Beam right & left 4878 FVT	REV: G-2-2
MATERIAL SURFACE: Smooth			WEIGHT: 113.72 Lbs CREATED: 10/6/2022	DRAWN BY: R. Dohr MODIFIED: 2/2/2026	SHEET: 7

BURN LIST - BOM

PART NAME	ITEM QTY	QTY	DESCRIPTION	STOCK NUMBER	MATERIAL	MASS	SHEET
200068659	2	2	PG&E FVT SAFETY LATCH SMALL ARM	100007735	STL ASTM A36 SM-HRPO RAW .250	0.695 lbmass	
200068661	2	2	PG&E FVT SAFETY LATCH LONG ARM	100007735	STL ASTM A36 SM-HRPO RAW .250	1.499 lbmass	
200069133	2	20.460 lbmass	Door Component Steel Side Bar	100007735	STL ASTM A36 SM-HRPO RAW .250	10.230 lbmass	10
200069134	1	51.508 lbmass	Door Component Steel Plate, Top	100007735	STL ASTM A36 SM-HRPO RAW .250	51.508 lbmass	11
200069135	9	11.191 lbmass	Door Component Steel Stiffener, Bar	100007735	STL ASTM A36 SM-HRPO RAW .250	1.243 lbmass	12
200069137	4	179.296 lbmass	Door Component Steel Channel	100007838	STL ASTM A36 SM-HRPO RAW .3125	44.824 lbmass	13
200069150	4	5.322 lbmass	Door Component Steel Side Bar	100007735	STL ASTM A36 SM-HRPO RAW .250	1.331 lbmass	14
200069138	1	110.831 lbmass	Door Component Steel Plate, Top Nameplate	100007735	STL ASTM A36 SM-HRPO RAW .250	110.831 lbmass	15
200069141	1	110.497 lbmass	Door Component Steel Plate, Bottom Nameplate	100007735	STL ASTM A36 SM-HRPO RAW .250	110.497 lbmass	16
200069151	4	14.169 lbmass	Door Component Steel Side Bar	100007735	STL ASTM A36 SM-HRPO RAW .250	3.542 lbmass	17
200069154	4	4.436 lbmass	Door Component Steel Stiffener, Plate	100007807	STL ASTM A36 GA-11 SM-HRS RAW .1196	1.109 lbmass	18
200069153	56	115.993 lbmass	Door Component Steel Stiffener, Bar	100007807	STL ASTM A36 GA-11 SM-HRS RAW .1196	2.071 lbmass	19
200069152	4	12.523 lbmass	Door Component Steel Stiffener, Bar	100007734	STL ASTM A36 SM-HRPO 60X120 RAW .1875	3.131 lbmass	20
200069145	2	76.452 lbmass	Frame Component Steel Frame End, Adjustable	100007734	STL ASTM A36 SM-HRPO 60X120 RAW .1875	38.226 lbmass	21
200069146	2	89.906 lbmass	Frame Component Steel Frame Side, Adjustable	100007734	STL ASTM A36 SM-HRPO 60X120 RAW .1875	44.953 lbmass	22
200069144	4	2.200 lbmass	Frame Component Steel	100007734	STL ASTM A36 SM-HRPO 60X120 RAW .1875	0.550 lbmass	23
200069159	12	5.403 lbmass	SQUARE NUT BRACKET-CUSTOM PG&E FVT	100007734	STL ASTM A36 SM-HRPO 60X120 RAW .1875	0.450 lbmass	24
200069158	12	3.755 lbmass	STANDOFF SIDEWALL	100007734	STL ASTM A36 SM-HRPO 60X120 RAW .1875	0.313 lbmass	25
200069890	2	33.947 lbmass	Frame Component - Leveling Bar	100007735	STL ASTM A36 SM-HRPO RAW .250	16.974 lbmass	27

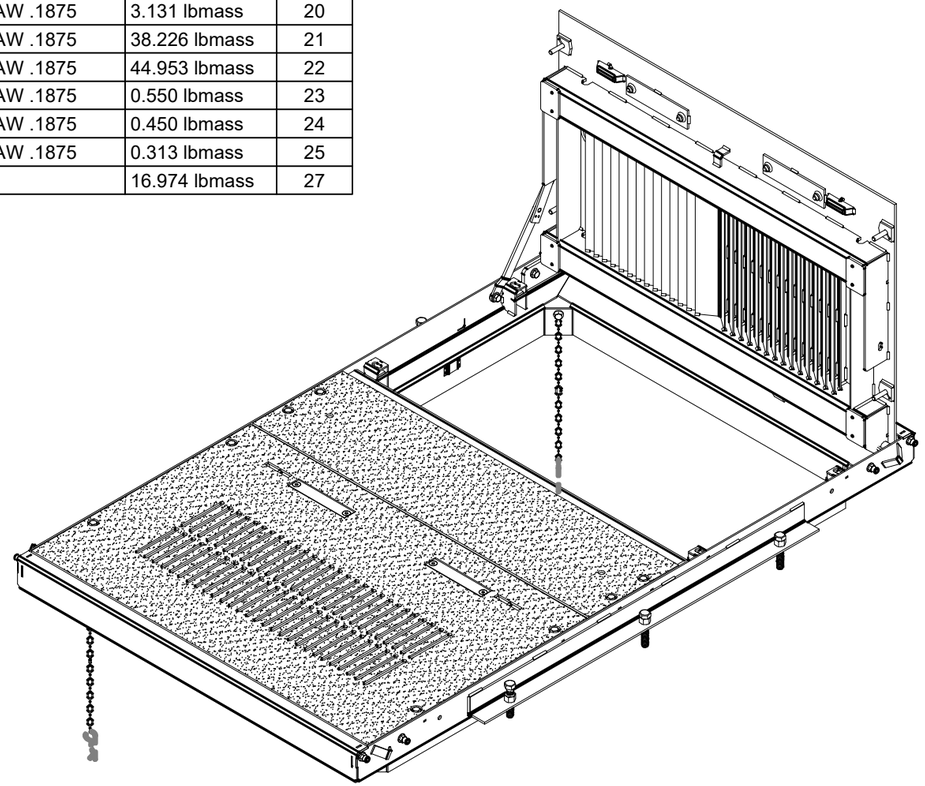

100002423.idw

MATERIAL FINISH: Galvanized

MATERIAL SURFACE: TraxPlate™

Infrastructure JENSEN
527 Dunn Circle, Sparks, NV 89431
775-352-2716 FAX: 755-358-8127
JENSENMETALTECH.COM

©2026 Jensen Infrastructure - All rights reserved.
All materials appearing as Jensen Infrastructure documents and the like are proprietary work product and are protected under U.S. copyright and other laws. Unless in conjunction with business conducted with Jensen Infrastructure , any use of Jensen Infrastructure work product without express, written consent is prohibited, and recipient is prohibited from distributing any and all work product to non-approved third parties under penalty of civil action.
This product shall only be produced in a Jensen Infrastructure facility.

PART NUMBER & DESCRIPTION: 100002423
CAS2-4878-AH-TRX-G-SG-GR-PG&E-OH08-TRANSFORMER FVT

REV: G-2-2

WEIGHT: 1137.48 Lbs

DRAWN BY: R. Dohr

SHEET: 8

CREATED: 10/6/2022

MODIFIED: 2/2/2026

CUT LIST - BOM

PART NAME	ITEM QTY	BASE QTY	QTY	DESCRIPTION	PART NUMBER	MASS	SHEET
100005205	4	6.000 in	24.000 in	STRUCTURAL ANGLE UNEQUAL - A36 STEEL - L 3 x 2 x 3/8	100005205	2.968 lbmass	
100005184	4	44.25 in	177.000 in	STRUCTURAL ANGLE EQUAL - A36 STEEL - L 1.5 x 1.5 x 1/4	100005184	8.681 lbmass	
100005167	2	51.250 in	102.500 in	STRUCTURAL STEEL RECTANGULAR TUBE - 6 x 4 x 3/8	200068766	90.188 lbmass	27

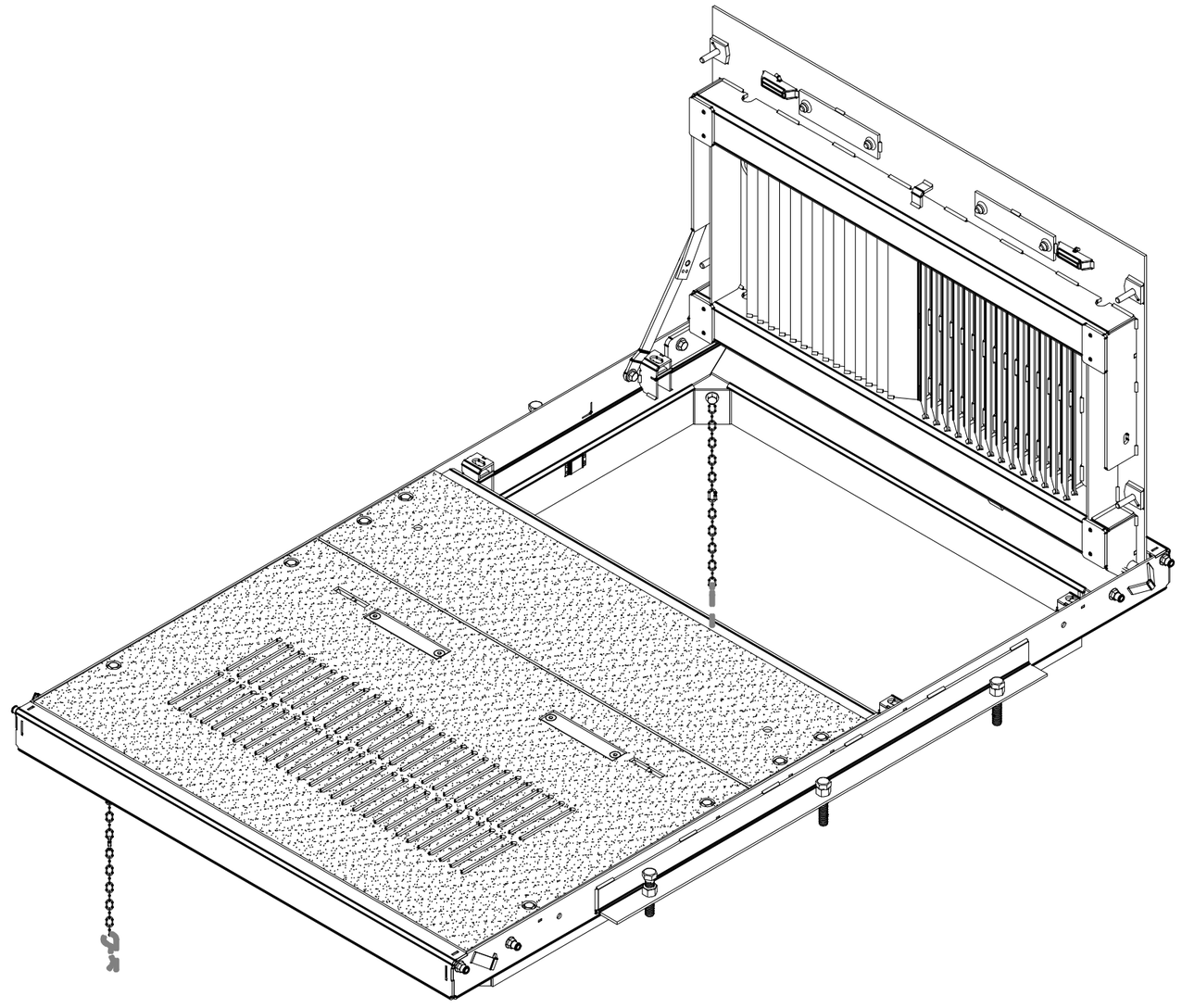

100002423.idw

MATERIAL FINISH: Galvanized	Infrastructure JENSEN 527 Dunn Circle, Sparks, NV 89431 775-352-2716 FAX: 755-358-8127 *JENSENMETALTECH.COM*	©2026 Jensen Infrastructure - All rights reserved. All materials appearing as Jensen Infrastructure documents and the like are proprietary work product and are protected under U.S. copyright and other laws. Unless in conjunction with business conducted with Jensen Infrastructure , any use of Jensen Infrastructure work product without express, written consent is prohibited, and recipient is prohibited from distributing any and all work product to non-approved third parties under penalty of civil action. This product shall only be produced in a Jensen Infrastructure facility.	PART NUMBER & DESCRIPTION: 100002423 CAS2-4878-AH-TRX-G-SG-GR-PG&E-OH08-TRANSFORMER FVT		REV: G-2-2
MATERIAL SURFACE: TraxPlate™			WEIGHT: 1137.48 Lbs	DRAWN BY: R. Dohr	SHEET: 9
			CREATED: 10/6/2022	MODIFIED: 2/2/2026	

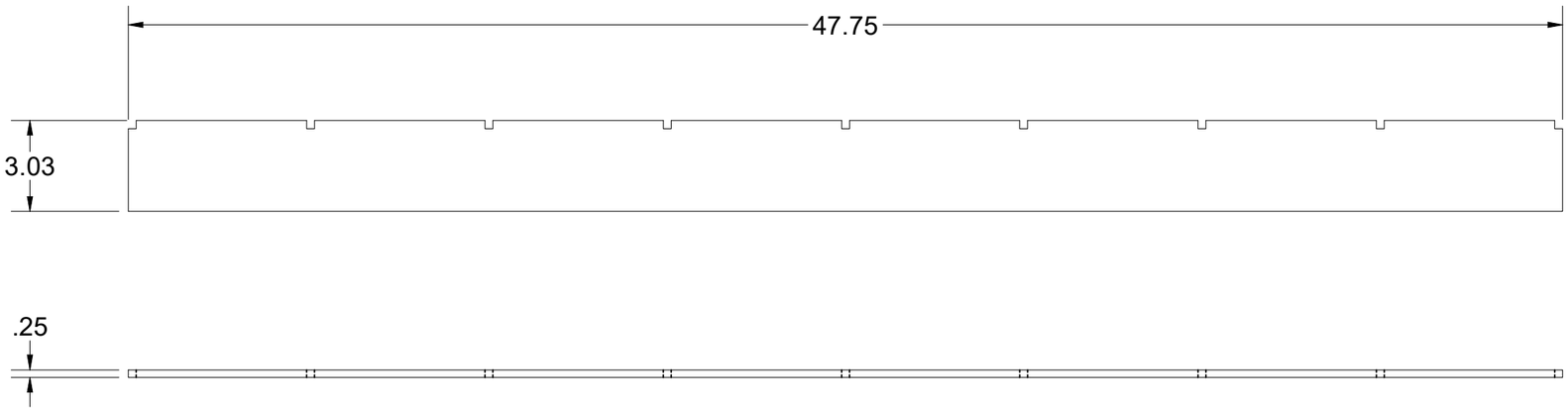

BEND TABLE				MATERIAL IFS: 100007735
BEND RADIUS	V-OPENING	BEND ANGLE	BEND DEDUCTION	MATERIAL THK: 0.25
-	-	-	-	MAT DESCRIPTION: STL ASTM A36 SM-HRPO RAW .250

Infrastructure
JENSEN
527 Dunn Circle, Sparks, NV 89431
775-352-2716 FAX: 755-358-8127
JENSENMETALTECH.COM

©2026 Jensen Infrastructure - All rights reserved.
All materials appearing as Jensen Infrastructure documents and the like are proprietary work product and are protected under U.S. copyright and other laws. Unless in conjunction with business conducted with Jensen Infrastructure , any use of Jensen Infrastructure work product without express, written consent is prohibited, and recipient is prohibited from distributing any and all work product to non-approved third parties under penalty of civil action.
This product shall only be produced in a Jensen Infrastructure facility.

NAME & DESCRIPTION: 200069133 Door Component Steel Side Bar		REV: G-2-2
WEIGHT: 10.230 lbmass	DRAWN BY: R. Dohr	SHEET: 10 OF 27
CREATED: 10/6/2022	MODIFIED: 2/2/2026	

100002423.idw

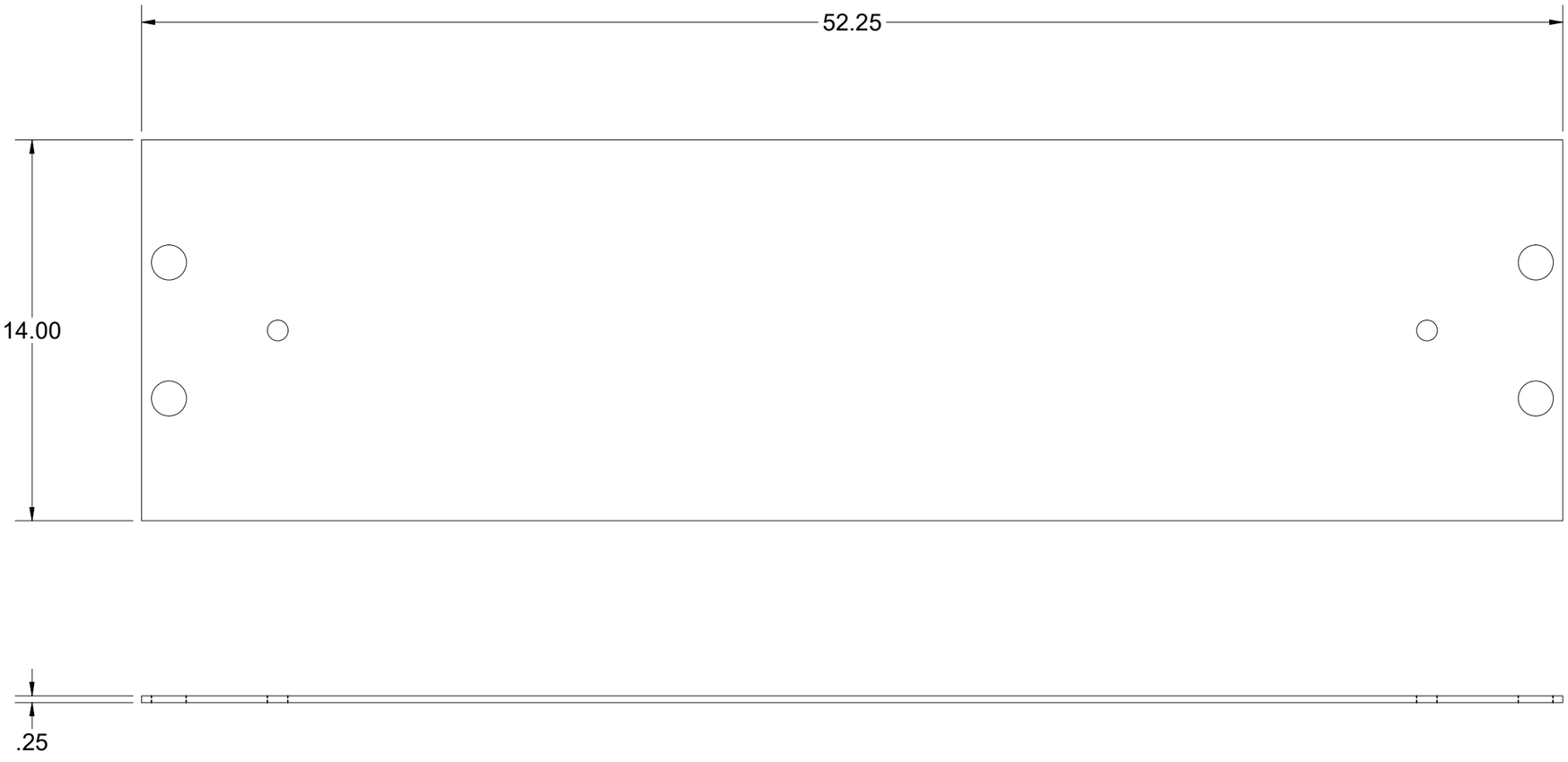

100002423.idw

BEND TABLE				MATERIAL IFS: 100007735
BEND RADIUS	V-OPENING	BEND ANGLE	BEND DEDUCTION	MATERIAL THK: 0.25
-	-	-	-	MAT DESCRIPTION: STL ASTM A36 SM-HRPO RAW .250

Infrastructure
JENSEN
527 Dunn Circle, Sparks, NV 89431
775-352-2716 FAX: 755-358-8127
JENSENMETALTECH.COM

©2026 Jensen Infrastructure - All rights reserved.
All materials appearing as Jensen Infrastructure documents and the like are proprietary work product and are protected under U.S. copyright and other laws. Unless in conjunction with business conducted with Jensen Infrastructure , any use of Jensen Infrastructure work product without express, written consent is prohibited, and recipient is prohibited from distributing any and all work product to non-approved third parties under penalty of civil action.
This product shall only be produced in a Jensen Infrastructure facility.

NAME & DESCRIPTION:	200069134 Door Component Steel Plate, Top		REV: G-2-2
WEIGHT: 51.508 lbmass		DRAWN BY: R. Dohr	SHEET: 11 OF 27
CREATED: 10/6/2022		MODIFIED: 2/2/2026	

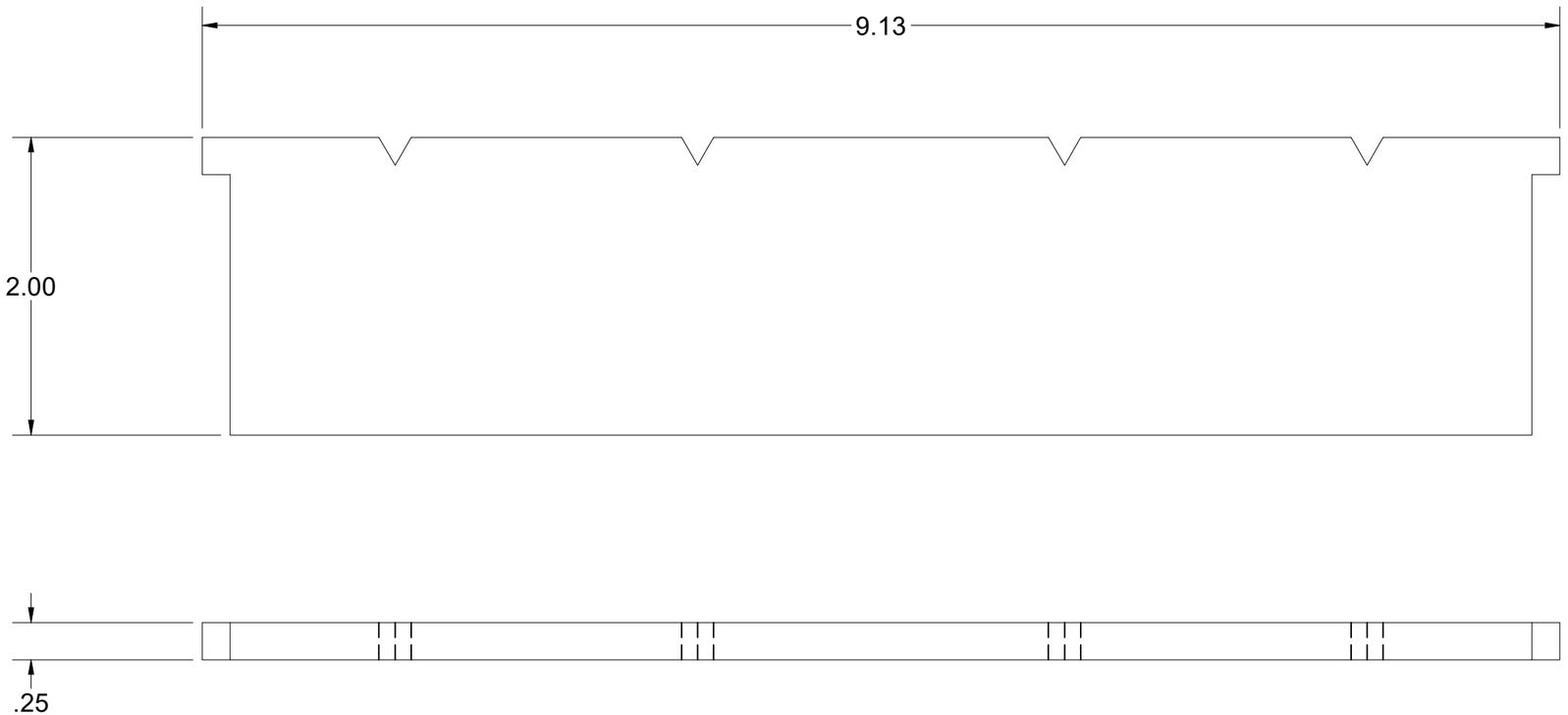

BEND TABLE				MATERIAL IFS: 100007735
BEND RADIUS	V-OPENING	BEND ANGLE	BEND DEDUCTION	MATERIAL THK: 0.25
-	-	-	-	MAT DESCRIPTION: STL ASTM A36 SM-HRPO RAW .250

Infrastructure
JENSEN
527 Dunn Circle, Sparks, NV 89431
775-352-2716 FAX: 755-358-8127
JENSENMETALTECH.COM

©2026 Jensen Infrastructure - All rights reserved.
All materials appearing as Jensen Infrastructure documents and the like are proprietary work product and are protected under U.S. copyright and other laws. Unless in conjunction with business conducted with Jensen Infrastructure , any use of Jensen Infrastructure work product without express, written consent is prohibited, and recipient is prohibited from distributing any and all work product to non-approved third parties under penalty of civil action.
This product shall only be produced in a Jensen Infrastructure facility.

NAME & DESCRIPTION: 200069135 Door Component Steel Stiffener, Bar		REV: G-2-2
WEIGHT: 1.243 lbmass	DRAWN BY: R. Dohr	SHEET: 12 OF 27
CREATED: 10/6/2022	MODIFIED: 2/2/2026	

100002423.idw

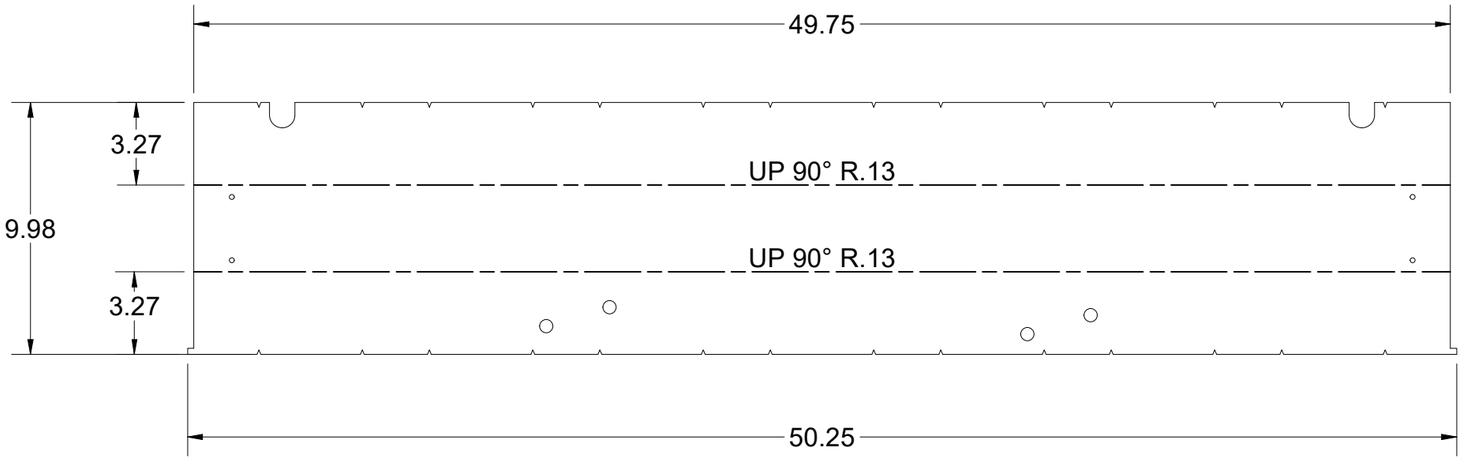

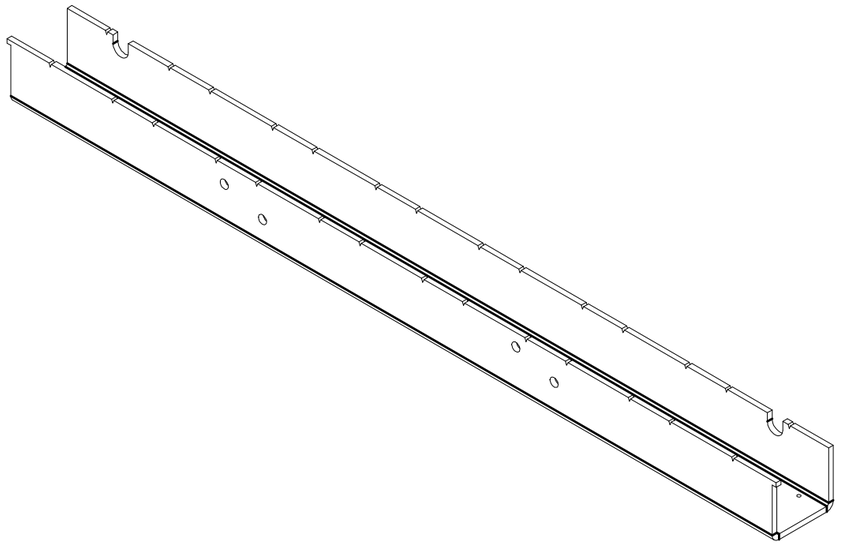

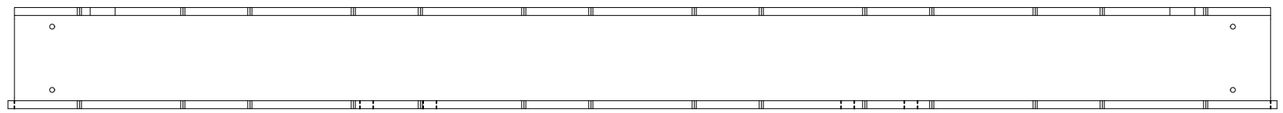

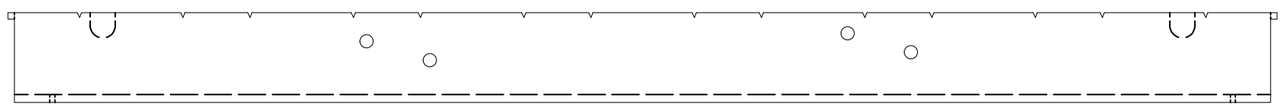

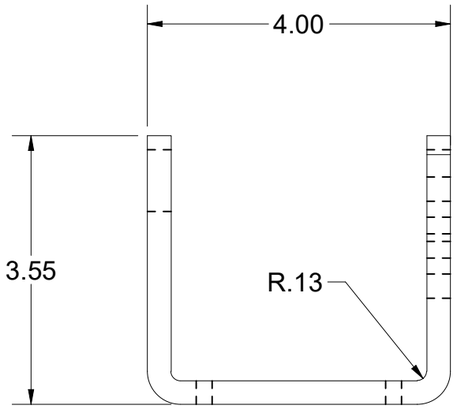

BEND TABLE				MATERIAL IFS: 100007838
BEND RADIUS	V-OPENING	BEND ANGLE	BEND DEDUCTION	MATERIAL THK: 0.3125
0.125	2.5	90	0.5580	MAT DESCRIPTION: STL ASTM A36 SM-HRPO RAW .3125

Infrastructure
JENSEN
527 Dunn Circle, Sparks, NV 89431
775-352-2716 FAX: 755-358-8127
JENSENMETALTECH.COM

©2026 Jensen Infrastructure - All rights reserved.
All materials appearing as Jensen Infrastructure documents and the like are proprietary work product and are protected under U.S. copyright and other laws. Unless in conjunction with business conducted with Jensen Infrastructure , any use of Jensen Infrastructure work product without express, written consent is prohibited, and recipient is prohibited from distributing any and all work product to non-approved third parties under penalty of civil action.
This product shall only be produced in a Jensen Infrastructure facility.

NAME & DESCRIPTION:	200069137 Door Component Steel Channel	REV:
WEIGHT: 44.824 lbmass	DRAWN BY: R. Dohr	SHEET: 13 OF 27
CREATED: 10/6/2022	MODIFIED: 2/2/2026	

100002423.idw

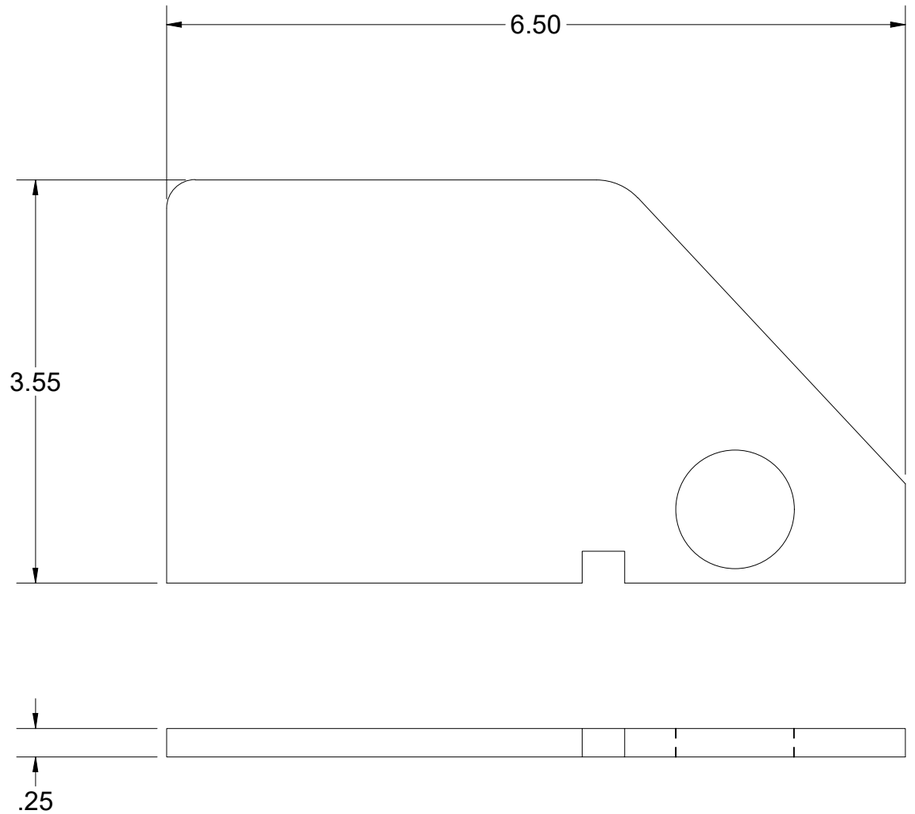

BEND TABLE				MATERIAL IFS: 100007735
BEND RADIUS	V-OPENING	BEND ANGLE	BEND DEDUCTION	MATERIAL THK: 0.25
-	-	-	-	MAT DESCRIPTION: STL ASTM A36 SM-HRPO RAW .250

Infrastructure
JENSEN
527 Dunn Circle, Sparks, NV 89431
775-352-2716 FAX: 755-358-8127
JENSENMETALTECH.COM

©2026 Jensen Infrastructure - All rights reserved.
All materials appearing as Jensen Infrastructure documents and the like are proprietary work product and are protected under U.S. copyright and other laws. Unless in conjunction with business conducted with Jensen Infrastructure , any use of Jensen Infrastructure work product without express, written consent is prohibited, and recipient is prohibited from distributing any and all work product to non-approved third parties under penalty of civil action.
This product shall only be produced in a Jensen Infrastructure facility.

NAME & DESCRIPTION:	200069150 Door Component Steel Side Bar	REV:
WEIGHT: 1.331 lbmass	DRAWN BY: R. Dohr	SHEET: 14 OF 27
CREATED: 10/6/2022	MODIFIED: 2/2/2026	

100002423.idw

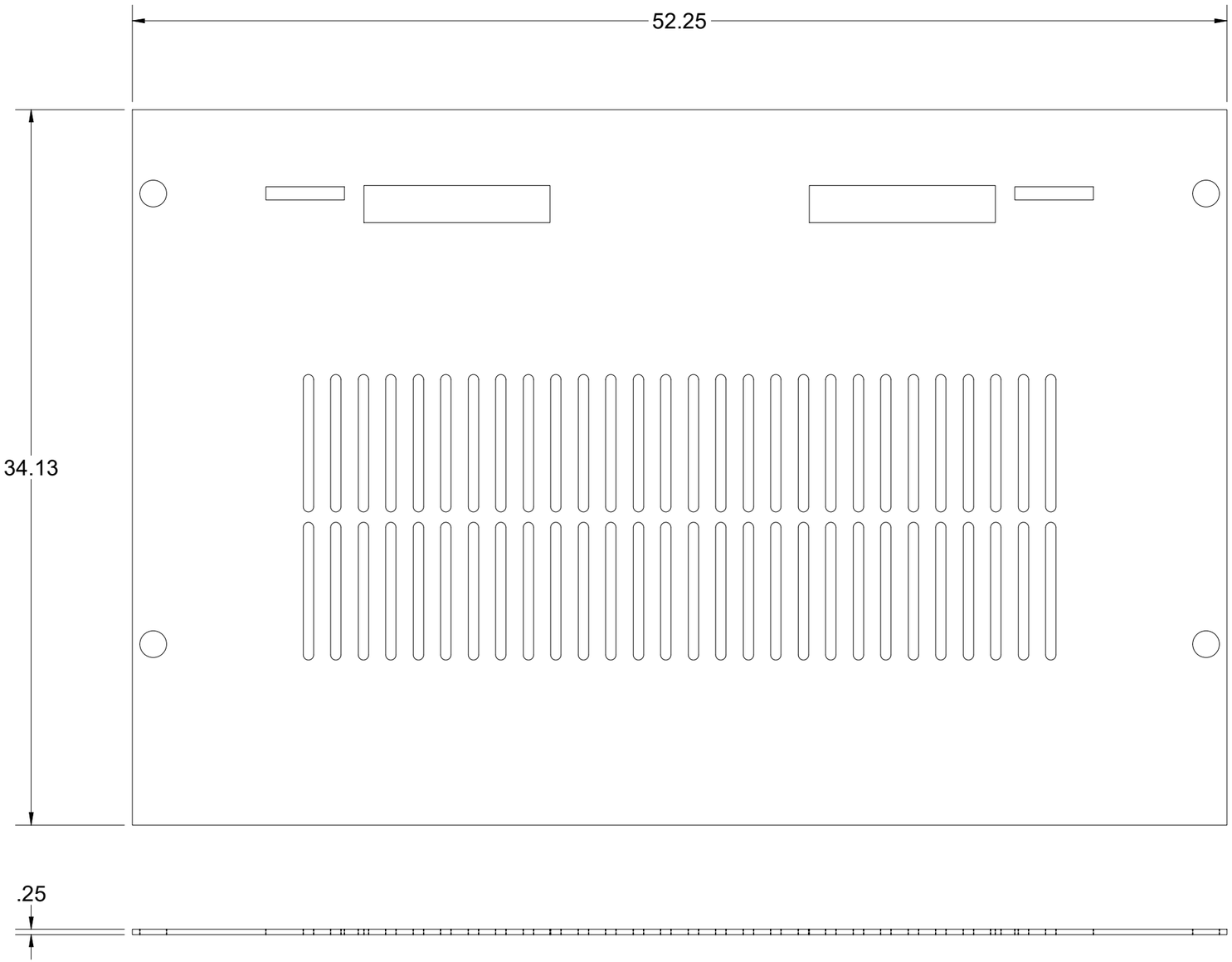

100002423.idw

BEND TABLE				MATERIAL IFS: 100007735
BEND RADIUS	V-OPENING	BEND ANGLE	BEND DEDUCTION	MATERIAL THK: 0.25
-	-	-	-	MAT DESCRIPTION: STL ASTM A36 SM-HRPO RAW .250

Infrastructure
JENSEN
527 Dunn Circle, Sparks, NV 89431
775-352-2716 FAX: 755-358-8127
JENSENMETALTECH.COM

©2026 Jensen Infrastructure - All rights reserved.
All materials appearing as Jensen Infrastructure documents and the like are proprietary work product and are protected under U.S. copyright and other laws. Unless in conjunction with business conducted with Jensen Infrastructure , any use of Jensen Infrastructure work product without express, written consent is prohibited, and recipient is prohibited from distributing any and all work product to non-approved third parties under penalty of civil action.
This product shall only be produced in a Jensen Infrastructure facility.

NAME & DESCRIPTION:	200069138 Door Component Steel Plate, Top Nameplate	REV: G-2-2
WEIGHT: 110.831 lbmass	DRAWN BY: R. Dohr	SHEET: 15 OF 27
CREATED: 10/6/2022	MODIFIED: 2/2/2026	

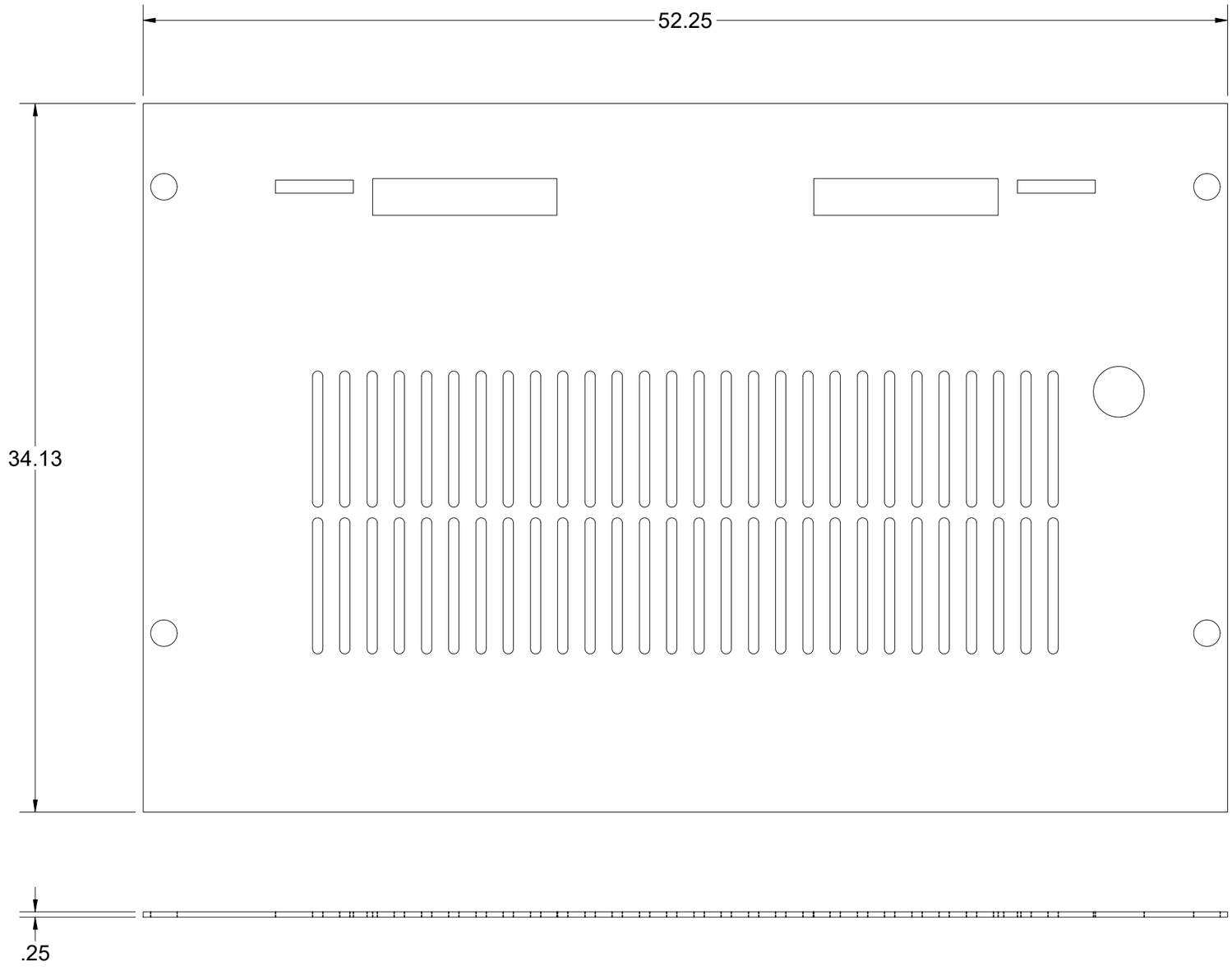

100002423.idw

BEND TABLE				MATERIAL IFS: 100007735
BEND RADIUS	V-OPENING	BEND ANGLE	BEND DEDUCTION	MATERIAL THK: 0.25
-	-	-	-	MAT DESCRIPTION: STL ASTM A36 SM-HRPO RAW .250

Infrastructure
JENSEN
527 Dunn Circle, Sparks, NV 89431
775-352-2716 FAX: 755-358-8127
JENSENMETALTECH.COM

©2026 Jensen Infrastructure - All rights reserved.
All materials appearing as Jensen Infrastructure documents and the like are proprietary work product and are protected under U.S. copyright and other laws. Unless in conjunction with business conducted with Jensen Infrastructure , any use of Jensen Infrastructure work product without express, written consent is prohibited, and recipient is prohibited from distributing any and all work product to non-approved third parties under penalty of civil action.
This product shall only be produced in a Jensen Infrastructure facility.

NAME & DESCRIPTION:	200069141 Door Component Steel Plate, Bottom Nameplate	REV:
WEIGHT: 110.497 lbmass	DRAWN BY: R. Dohr	SHEET: 16 OF 27
CREATED: 10/6/2022	MODIFIED: 2/2/2026	

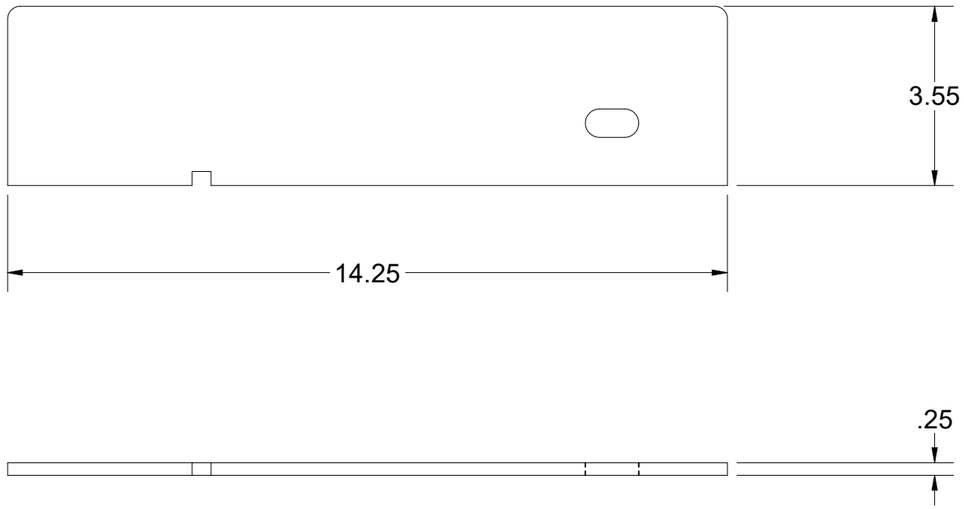

BEND TABLE				MATERIAL IFS: 100007735
BEND RADIUS	V-OPENING	BEND ANGLE	BEND DEDUCTION	MATERIAL THK: 0.25
-	-	-	-	MAT DESCRIPTION: STL ASTM A36 SM-HRPO RAW .250

Infrastructure
JENSEN
527 Dunn Circle, Sparks, NV 89431
775-352-2716 FAX: 755-358-8127
JENSENMETALTECH.COM

©2026 Jensen Infrastructure - All rights reserved.
All materials appearing as Jensen Infrastructure documents and the like are proprietary work product and are protected under U.S. copyright and other laws.
Unless in conjunction with business conducted with Jensen Infrastructure , any use of Jensen Infrastructure work product without express, written consent is prohibited, and recipient is prohibited from distributing any and all work product to non-approved third parties under penalty of civil action.
This product shall only be produced in a Jensen Infrastructure facility.

NAME & DESCRIPTION: 200069151 Door Component Steel Side Bar		REV: G-2-2
WEIGHT: 3.542 lbmass	DRAWN BY: R. Dohr	SHEET: 17 OF 27
CREATED: 10/6/2022	MODIFIED: 2/2/2026	

100002423.idw

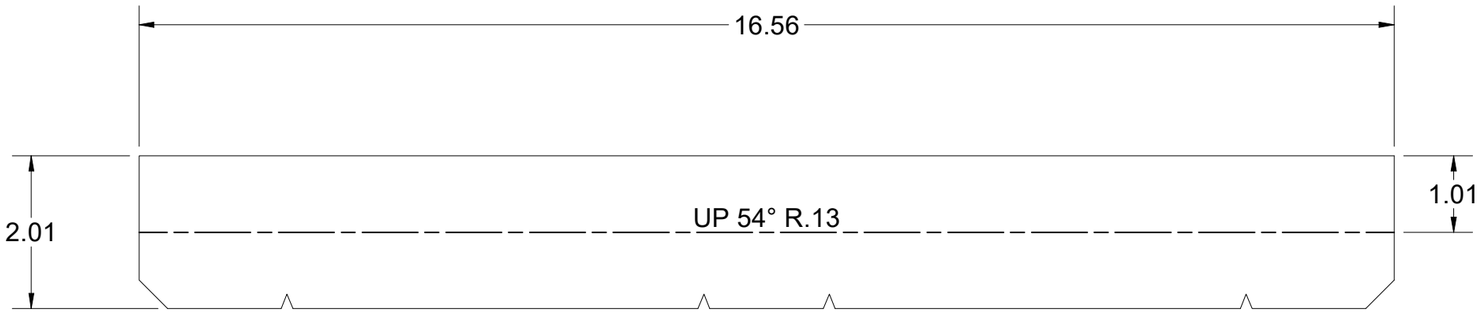

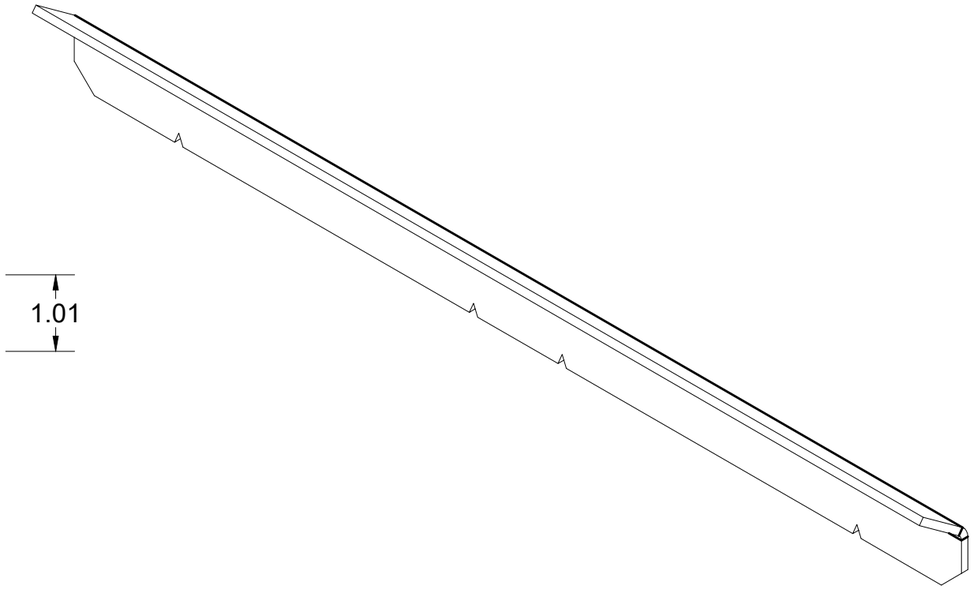

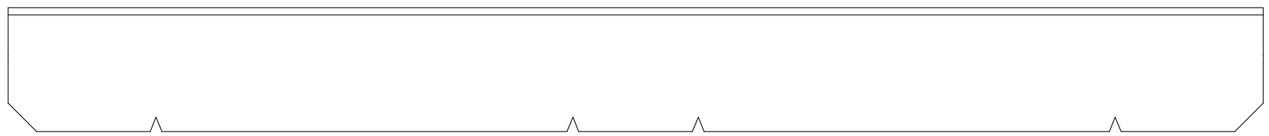

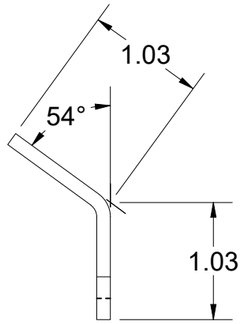

BEND TABLE			
BEND RADIUS	V-OPENING	BEND ANGLE	BEND DEDUCTION
0.125	1	54	0.050

MATERIAL IFS: 100007807

MATERIAL THK: 0.1196

MAT DESCRIPTION: STL ASTM A36 GA-11 SM-HRS RAW .1196

Infrastructure JENSEN
527 Dunn Circle, Sparks, NV 89431
775-352-2716 FAX: 755-358-8127
JENSENMETALTECH.COM

©2026 Jensen Infrastructure - All rights reserved. All materials appearing as Jensen Infrastructure documents and the like are proprietary work product and are protected under U.S. copyright and other laws. Unless in conjunction with business conducted with Jensen Infrastructure , any use of Jensen Infrastructure work product without express, written consent is prohibited, and recipient is prohibited from distributing any and all work product to non-approved third parties under penalty of civil action. This product shall only be produced in a Jensen Infrastructure facility.

NAME & DESCRIPTION: 200069154
Door Component Steel Stiffener, Plate

REV: G-2-2

WEIGHT: 1.109 lbmass

DRAWN BY: R. Dohr

CREATED: 10/6/2022

MODIFIED: 2/2/2026

SHEET: 18 OF 27

100002423.idw

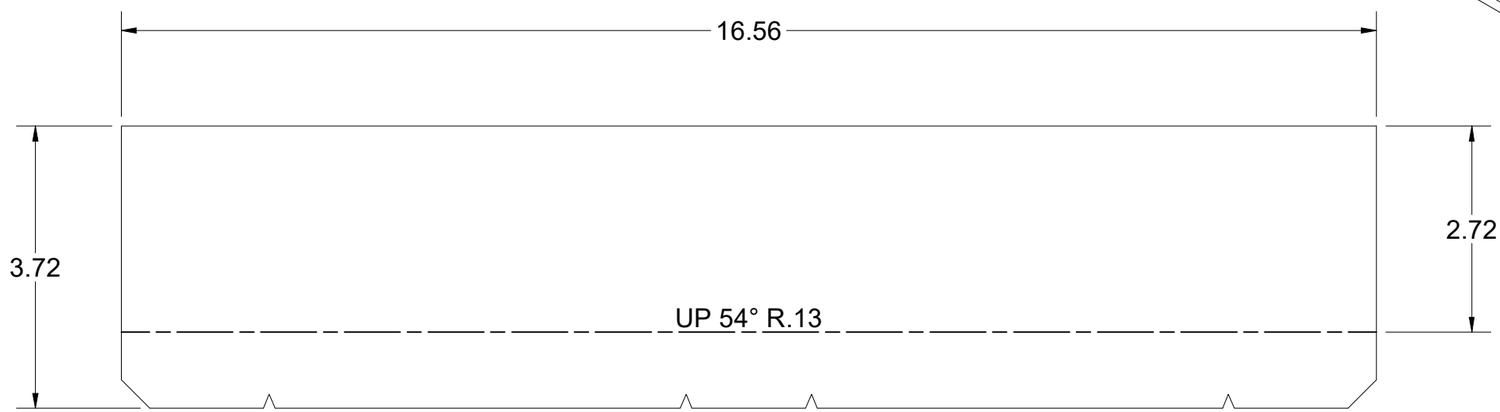

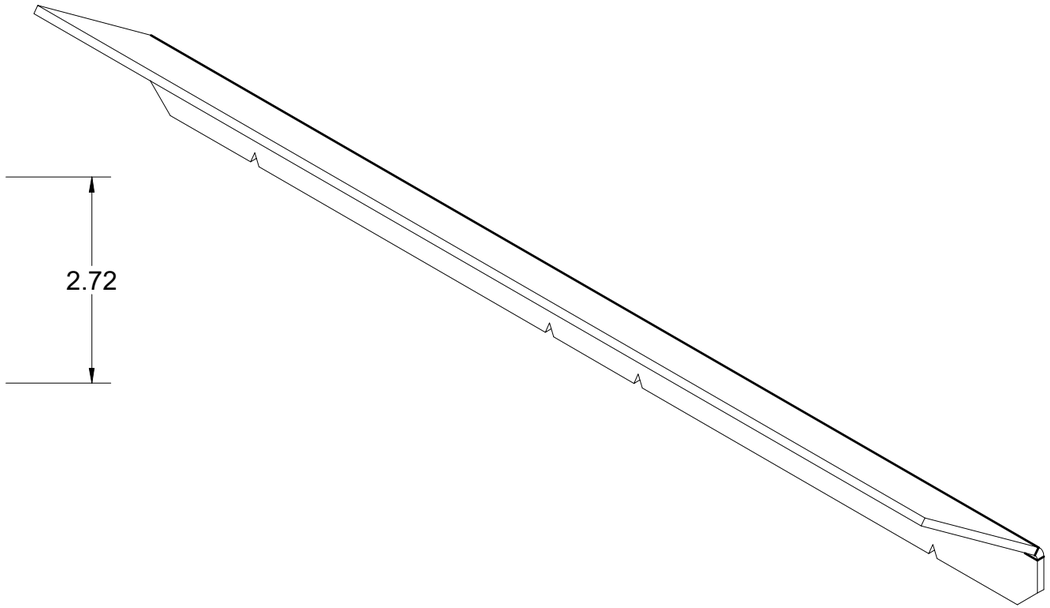

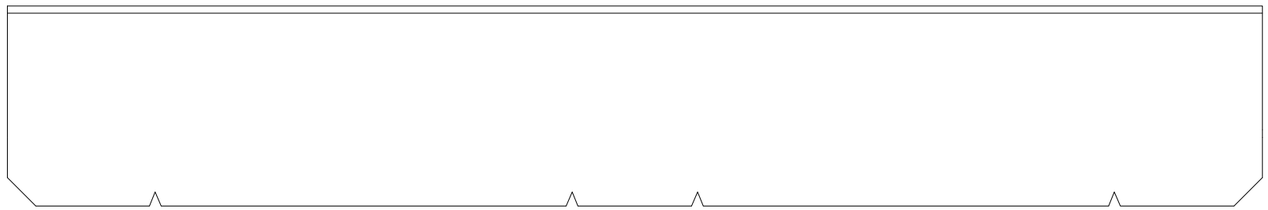

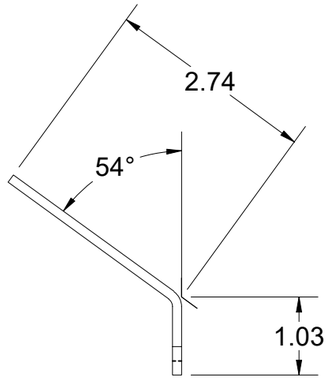

100002423.idw

BEND TABLE				MATERIAL IFS: 100007807
BEND RADIUS	V-OPENING	BEND ANGLE	BEND DEDUCTION	MATERIAL THK: 0.1196
0.125	1	54	0.050	MAT DESCRIPTION: STL ASTM A36 GA-11 SM-HRS RAW .1196

Infrastructure
JENSEN
527 Dunn Circle, Sparks, NV 89431
775-352-2716 FAX: 755-358-8127
JENSENMETALTECH.COM

©2026 Jensen Infrastructure - All rights reserved.
All materials appearing as Jensen Infrastructure documents and the like are proprietary work product and are protected under U.S. copyright and other laws. Unless in conjunction with business conducted with Jensen Infrastructure , any use of Jensen Infrastructure work product without express, written consent is prohibited, and recipient is prohibited from distributing any and all work product to non-approved third parties under penalty of civil action.
This product shall only be produced in a Jensen Infrastructure facility.

NAME & DESCRIPTION: 200069153 Door Component Steel Stiffener, Bar		REV: G-2-2
WEIGHT: 2.071 lbmass	DRAWN BY: R. Dohr	SHEET: 19 OF 27
CREATED: 10/6/2022	MODIFIED: 2/2/2026	

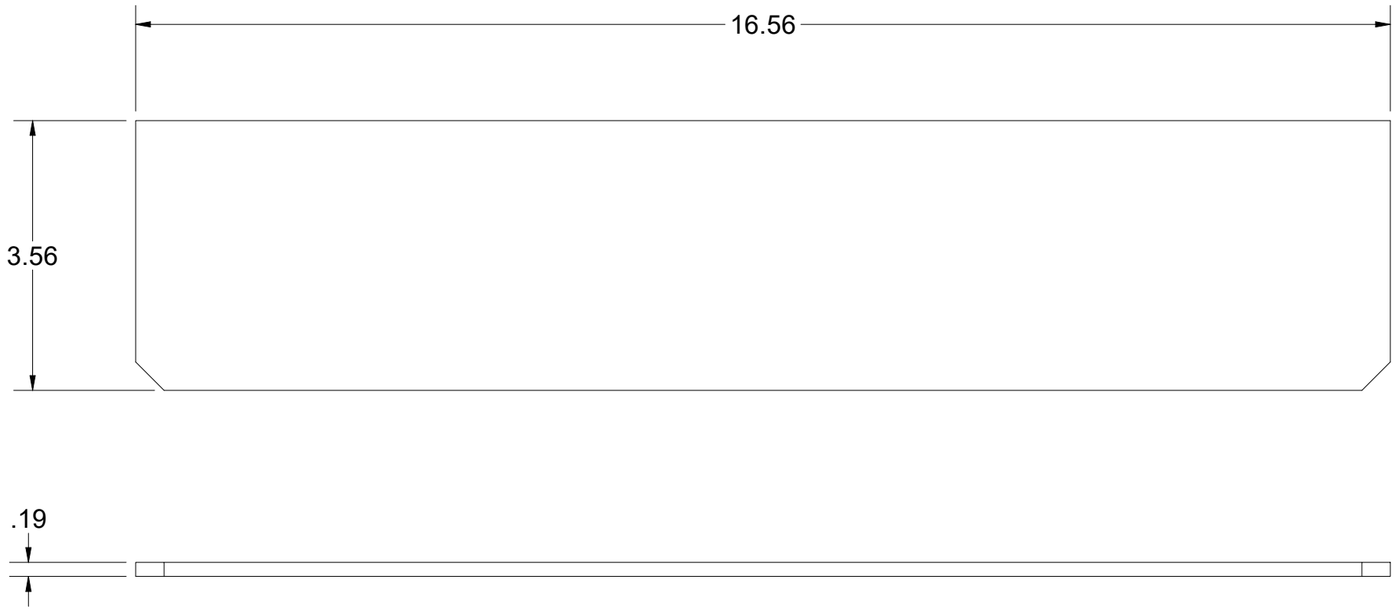

BEND TABLE				MATERIAL IFS: 100007734
BEND RADIUS	V-OPENING	BEND ANGLE	BEND DEDUCTION	MATERIAL THK: 0.1875
-	-	-	-	MAT DESCRIPTION: STL ASTM A36 SM-HRPO 60X120 RAW .1875

Infrastructure
JENSEN
527 Dunn Circle, Sparks, NV 89431
775-352-2716 FAX: 755-358-8127
JENSENMETALTECH.COM

©2026 Jensen Infrastructure - All rights reserved.
All materials appearing as Jensen Infrastructure documents and the like are proprietary work product and are protected under U.S. copyright and other laws. Unless in conjunction with business conducted with Jensen Infrastructure , any use of Jensen Infrastructure work product without express, written consent is prohibited, and recipient is prohibited from distributing any and all work product to non-approved third parties under penalty of civil action.
This product shall only be produced in a Jensen Infrastructure facility.

NAME & DESCRIPTION:		REV:
200069152 Door Component Steel Stiffener, Bar		G-2-2
WEIGHT: 3.131 lbmass	DRAWN BY: R. Dohr	SHEET: 20 OF 27
CREATED: 10/6/2022	MODIFIED: 2/2/2026	

100002423.idw

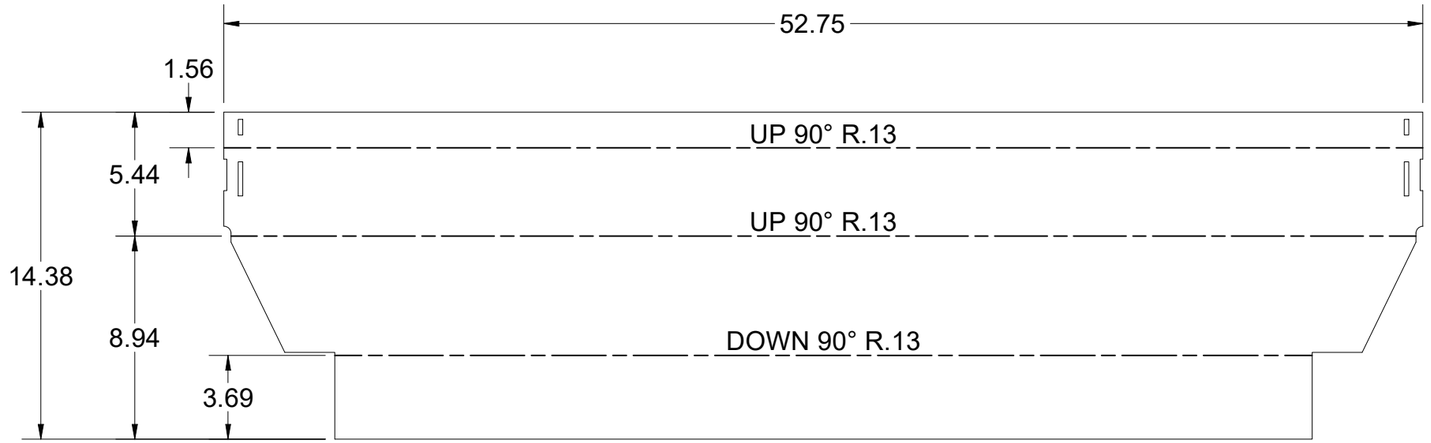

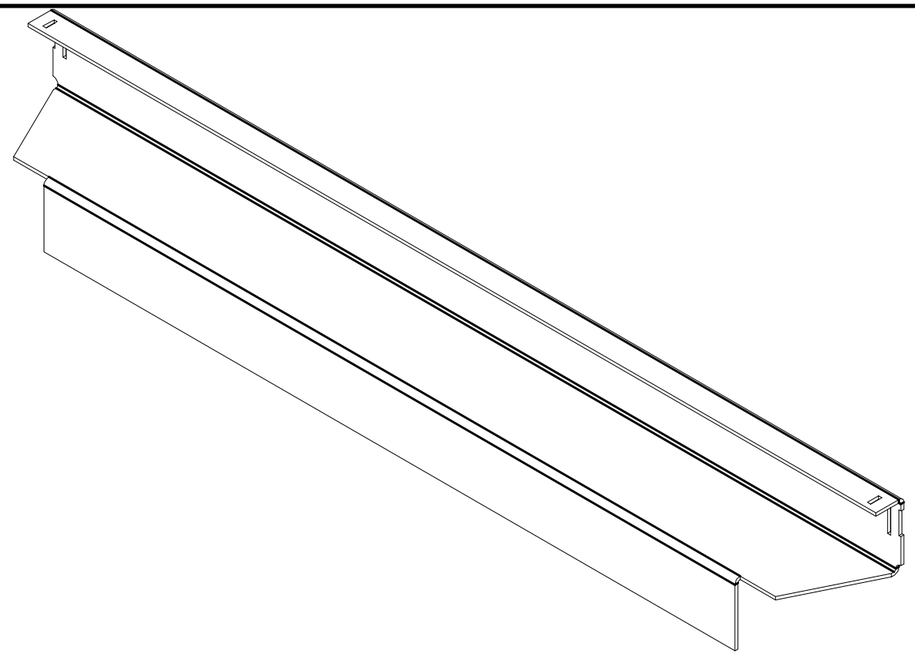

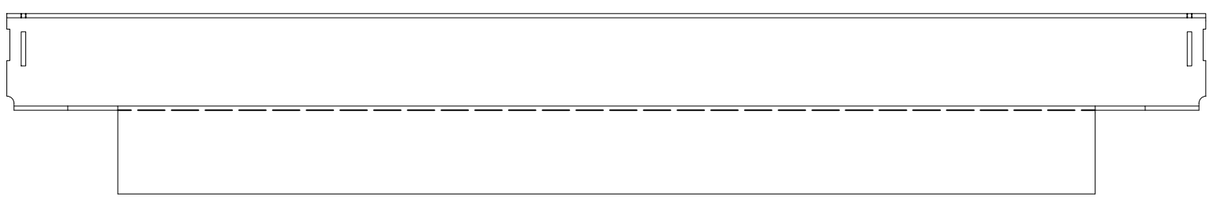

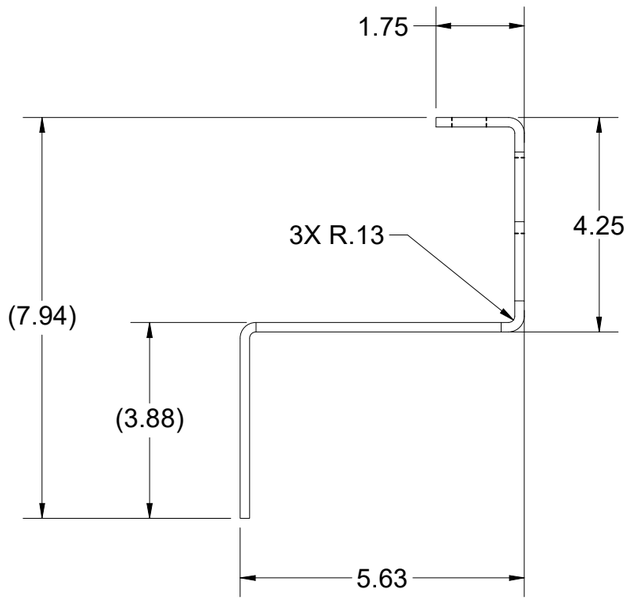

BEND TABLE				MATERIAL IFS: 100007734
BEND RADIUS	V-OPENING	BEND ANGLE	BEND DEDUCTION	MATERIAL THK: 0.1875
0.125	2	90	0.3750	MAT DESCRIPTION: STL ASTM A36 SM-HRPO 60X120 RAW .1875

Infrastructure
JENSEN
527 Dunn Circle, Sparks, NV 89431
775-352-2716 FAX: 755-358-8127
JENSENMETALTECH.COM

©2026 Jensen Infrastructure - All rights reserved.
All materials appearing as Jensen Infrastructure documents and the like are proprietary work product and are protected under U.S. copyright and other laws. Unless in conjunction with business conducted with Jensen Infrastructure , any use of Jensen Infrastructure work product without express, written consent is prohibited, and recipient is prohibited from distributing any and all work product to non-approved third parties under penalty of civil action.
This product shall only be produced in a Jensen Infrastructure facility.

NAME & DESCRIPTION: 200069145 Frame Component Steel Frame End, Adjustable		REV: G-2-2
WEIGHT: 38.226 lbmass	DRAWN BY: R. Dohr	SHEET: 21 OF 27
CREATED: 10/6/2022	MODIFIED: 2/2/2026	

100002423.idw

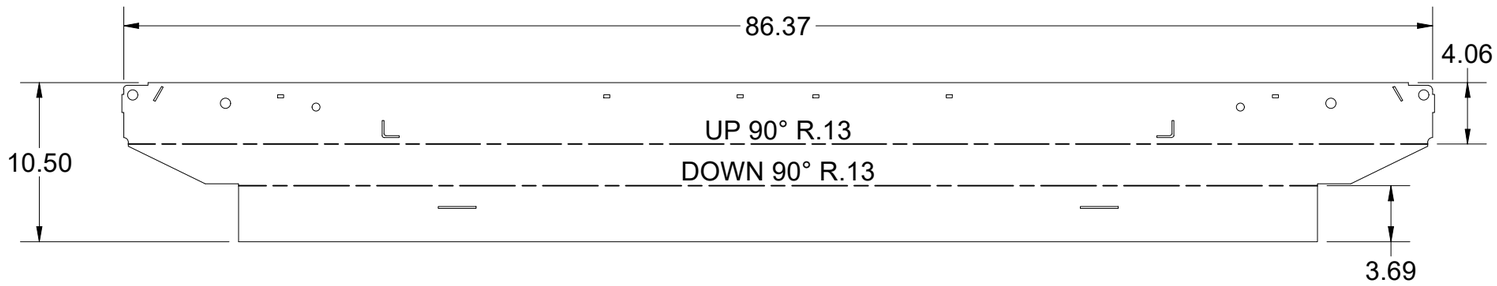

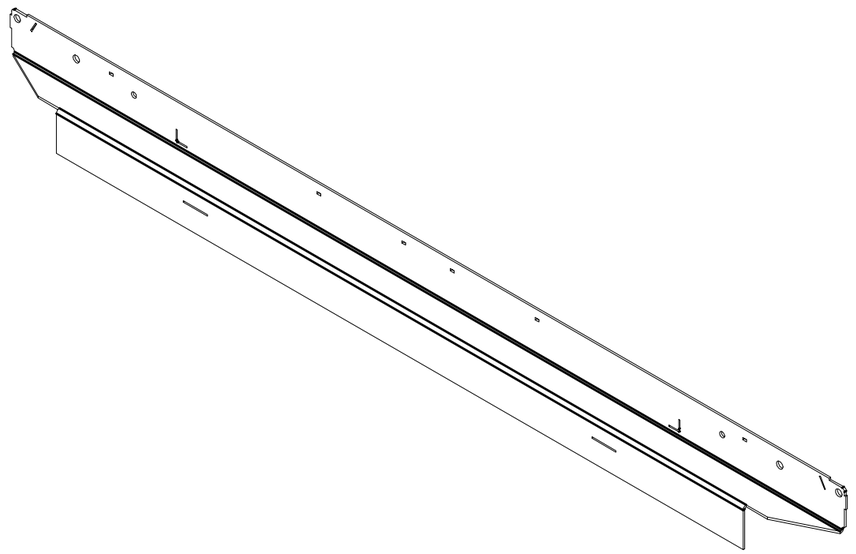



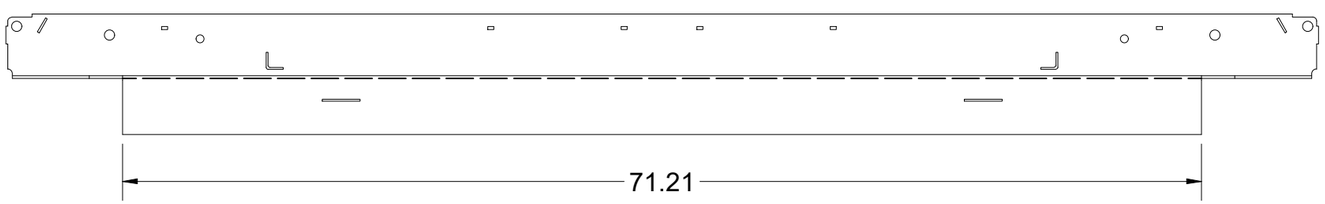

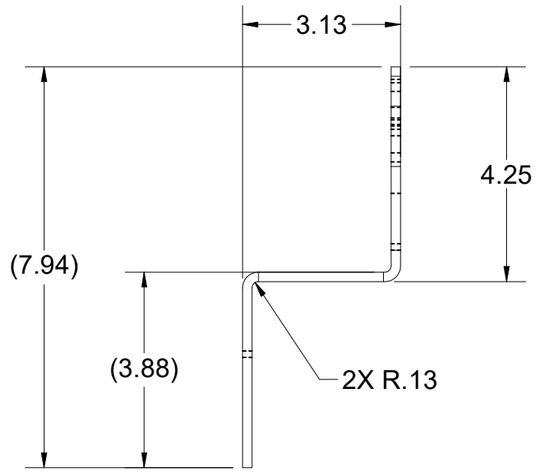

BEND TABLE			
BEND RADIUS	V-OPENING	BEND ANGLE	BEND DEDUCTION
0.125	2	90	0.3750

MATERIAL IFS: 100007734

MATERIAL THK: 0.1875

MAT DESCRIPTION: STL ASTM A36 SM-HRPO 60X120 RAW .1875

Infrastructure JENSEN
527 Dunn Circle, Sparks, NV 89431
775-352-2716 FAX: 755-358-8127
JENSENMETALTECH.COM

©2026 Jensen Infrastructure - All rights reserved.
All materials appearing as Jensen Infrastructure documents and the like are proprietary work product and are protected under U.S. copyright and other laws. Unless in conjunction with business conducted with Jensen Infrastructure , any use of Jensen Infrastructure work product without express, written consent is prohibited, and recipient is prohibited from distributing any and all work product to non-approved third parties under penalty of civil action.
This product shall only be produced in a Jensen Infrastructure facility.

NAME & DESCRIPTION: 200069146 — Frame Component Steel Frame Side, Adjustable

REV: G-2-2

WEIGHT: 44.953 lbmass

DRAWN BY: R. Dohr

CREATED: 10/6/2022

MODIFIED: 2/2/2026

SHEET: 22 OF 27

100002423.idw

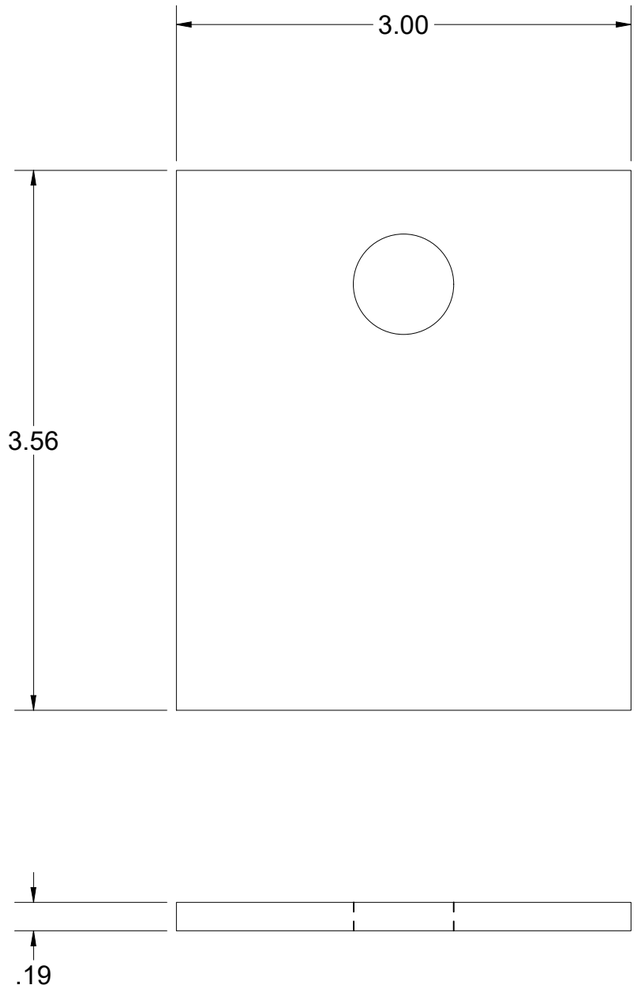

100002423.idw

BEND TABLE				MATERIAL IFS: 100007734
BEND RADIUS	V-OPENING	BEND ANGLE	BEND DEDUCTION	MATERIAL THK: 0.1875
-	-	-	-	MAT DESCRIPTION: STL ASTM A36 SM-HRPO 60X120 RAW .1875

Infrastructure
JENSEN
527 Dunn Circle, Sparks, NV 89431
775-352-2716 FAX: 755-358-8127
JENSENMETALTECH.COM

©2026 Jensen Infrastructure - All rights reserved.
All materials appearing as Jensen Infrastructure documents and the like are proprietary work product and are protected under U.S. copyright and other laws. Unless in conjunction with business conducted with Jensen Infrastructure , any use of Jensen Infrastructure work product without express, written consent is prohibited, and recipient is prohibited from distributing any and all work product to non-approved third parties under penalty of civil action.
This product shall only be produced in a Jensen Infrastructure facility.

NAME & DESCRIPTION:	200069144 Frame Component Steel	REV:
WEIGHT: 0.550 lbmass	DRAWN BY: R. Dohr	SHEET: 23 OF 27
CREATED: 10/6/2022	MODIFIED: 2/2/2026	

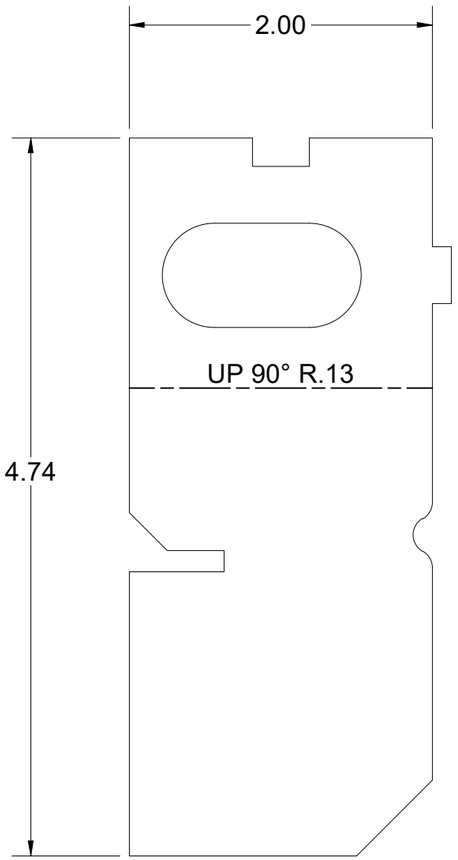

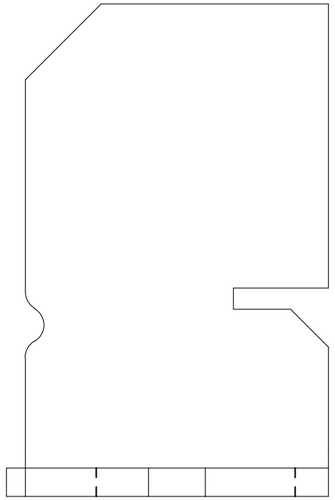

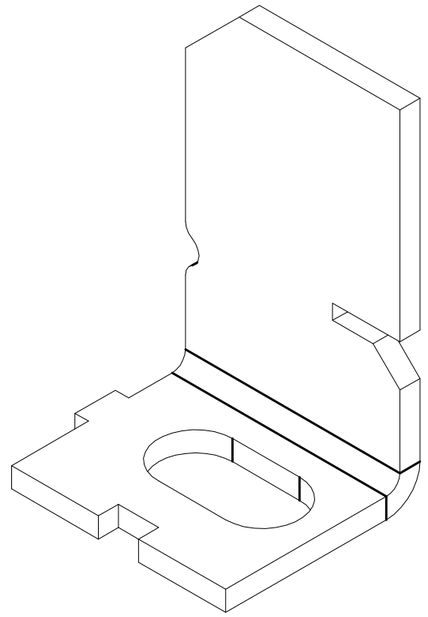

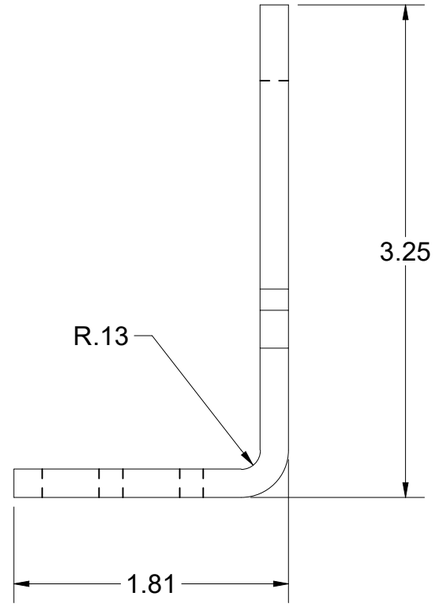

BEND TABLE				MATERIAL IFS: 100007734
BEND RADIUS	V-OPENING	BEND ANGLE	BEND DEDUCTION	MATERIAL THK: 0.1875
0.125	1	90	0.3250	MAT DESCRIPTION: STL ASTM A36 SM-HRPO 60X120 RAW .1875

Infrastructure
JENSEN
527 Dunn Circle, Sparks, NV 89431
775-352-2716 FAX: 755-358-8127
JENSENMETALTECH.COM

©2026 Jensen Infrastructure - All rights reserved.
All materials appearing as Jensen Infrastructure documents and the like are proprietary work product and are protected under U.S. copyright and other laws. Unless in conjunction with business conducted with Jensen Infrastructure , any use of Jensen Infrastructure work product without express, written consent is prohibited, and recipient is prohibited from distributing any and all work product to non-approved third parties under penalty of civil action.
This product shall only be produced in a Jensen Infrastructure facility.

NAME & DESCRIPTION:	200069159 SQUARE NUT BRACKET-CUSTOM PG&E FVT	REV:
WEIGHT: 0.450 lbmass	DRAWN BY: R. Dohr	SHEET: 24 OF 27
CREATED: 10/6/2022	MODIFIED: 2/2/2026	

100002423.idw

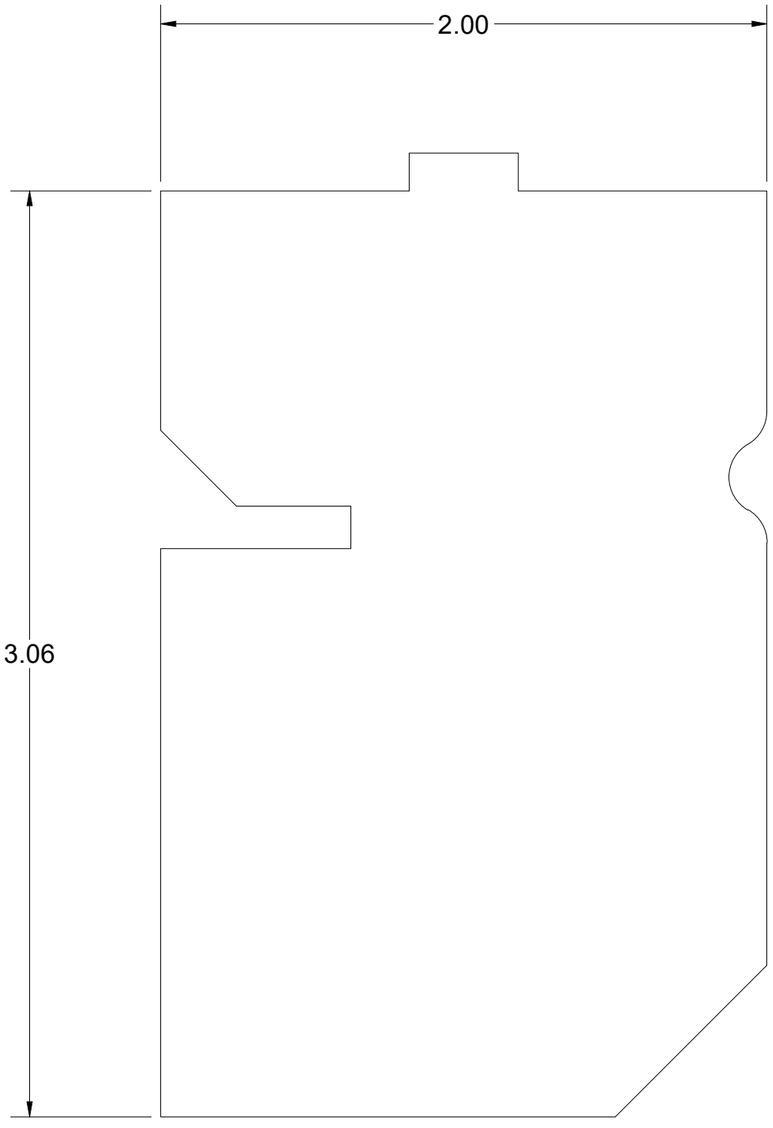

100002423.idw

BEND TABLE				MATERIAL IFS: 100007734
BEND RADIUS	V-OPENING	BEND ANGLE	BEND DEDUCTION	MATERIAL THK: 0.1875
-	-	-	-	MAT DESCRIPTION: STL ASTM A36 SM-HRPO 60X120 RAW .1875

Infrastructure
JENSEN
527 Dunn Circle, Sparks, NV 89431
775-352-2716 FAX: 755-358-8127
JENSENMETALTECH.COM

©2026 Jensen Infrastructure - All rights reserved.
All materials appearing as Jensen Infrastructure documents and the like are proprietary work product and are protected under U.S. copyright and other laws. Unless in conjunction with business conducted with Jensen Infrastructure , any use of Jensen Infrastructure work product without express, written consent is prohibited, and recipient is prohibited from distributing any and all work product to non-approved third parties under penalty of civil action.
This product shall only be produced in a Jensen Infrastructure facility.

NAME & DESCRIPTION:	200069158 STANDOFF SIDEWALL		REV: G-2-2
WEIGHT: 0.313 lbmass	DRAWN BY: R. Dohr		SHEET: 25 OF 27
CREATED: 10/6/2022	MODIFIED: 2/2/2026		

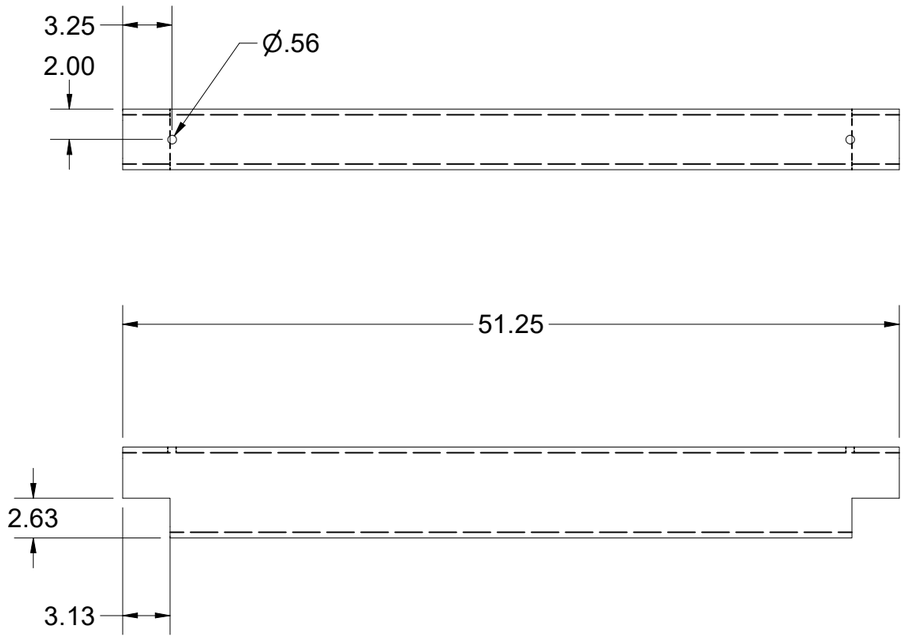

BEND TABLE				MATERIAL IFS: 100005167			
BEND RADIUS	V-OPENING	BEND ANGLE	BEND DEDUCTION	MATERIAL THK: 3/8			
				MAT DESCRIPTION: STRUCTURAL STEEL RECTANGULAR TUBE - 6 x 4 x 3/8			

Infrastructure
JENSEN
527 Dunn Circle, Sparks, NV 89431
775-352-2716 FAX: 755-358-8127
JENSENMETALTECH.COM

©2026 Jensen Infrastructure - All rights reserved.
All materials appearing as Jensen Infrastructure documents and the like are proprietary work product and are protected under U.S. copyright and other laws. Unless in conjunction with business conducted with Jensen Infrastructure , any use of Jensen Infrastructure work product without express, written consent is prohibited, and recipient is prohibited from distributing any and all work product to non-approved third parties under penalty of civil action.
This product shall only be produced in a Jensen Infrastructure facility.

NAME & DESCRIPTION: 200068766 STRUCTURAL STEEL RECTANGULAR TUBE - 6 x 4 x 3/8		REV: G-2-2
WEIGHT: 90.188 lbmass	DRAWN BY: R. Dohr	SHEET: 26 OF 27
CREATED: 10/6/2022	MODIFIED: 2/2/2026	

100002423.idw

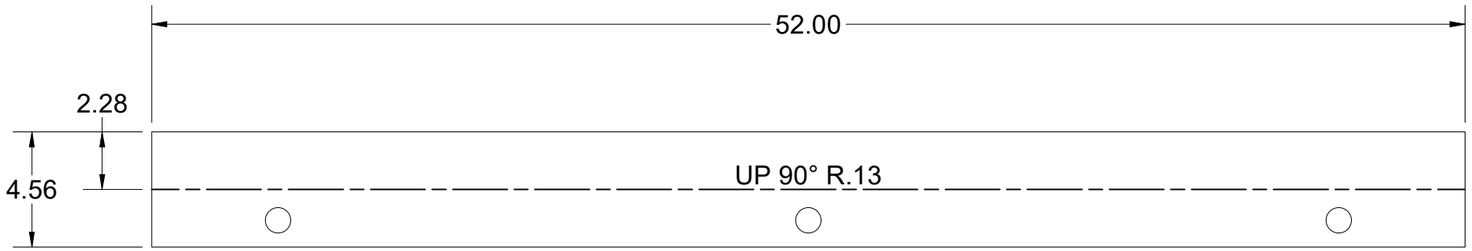

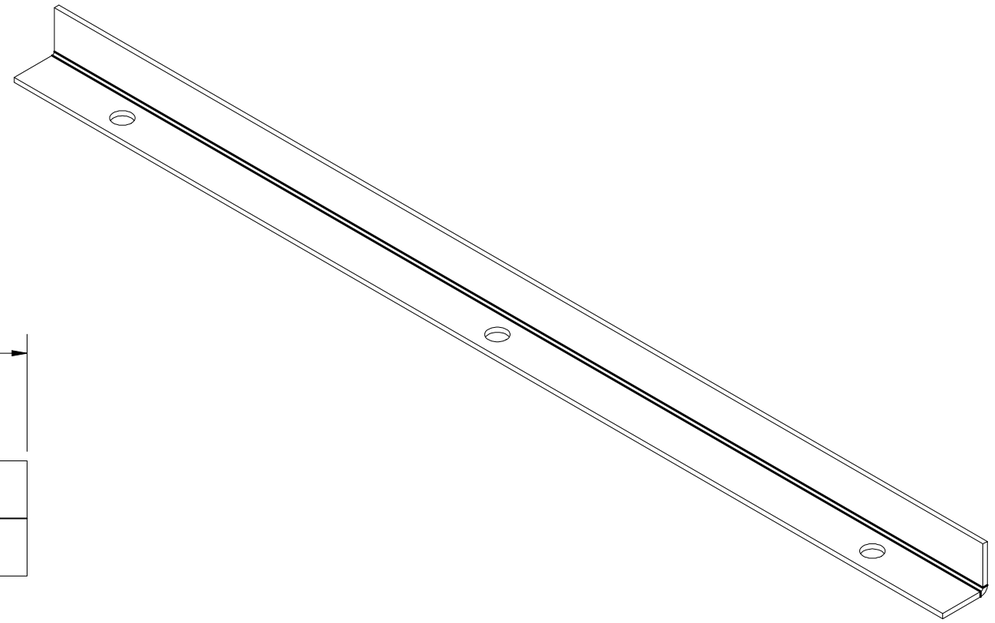

100002423.idw

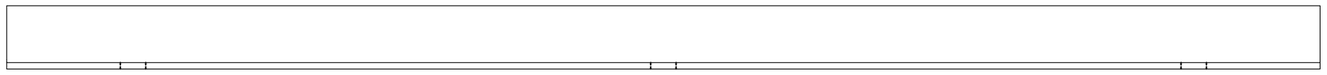

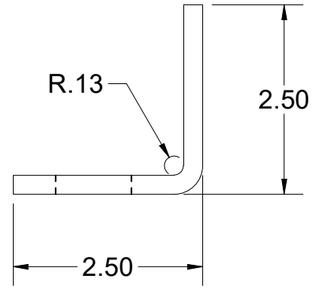

BEND TABLE				MATERIAL IFS: 100007735
BEND RADIUS	V-OPENING	BEND ANGLE	BEND DEDUCTION	MATERIAL THK: 0.25
0.125	2	90	0.440	MAT DESCRIPTION: STL ASTM A36 SM-HRPO RAW .250

Infrastructure
JENSEN
527 Dunn Circle, Sparks, NV 89431
775-352-2716 FAX: 755-358-8127
JENSENMETALTECH.COM

©2026 Jensen Infrastructure - All rights reserved.
All materials appearing as Jensen Infrastructure documents and the like are proprietary work product and are protected under U.S. copyright and other laws. Unless in conjunction with business conducted with Jensen Infrastructure , any use of Jensen Infrastructure work product without express, written consent is prohibited, and recipient is prohibited from distributing any and all work product to non-approved third parties under penalty of civil action.
This product shall only be produced in a Jensen Infrastructure facility.

NAME & DESCRIPTION: 200069890 Frame Component - Leveling Bar		REV: G-2-2
WEIGHT: 16.974 lbmass	DRAWN BY: R. Dohr	SHEET: 27 OF 27
CREATED: 10/6/2022	MODIFIED: 2/2/2026	