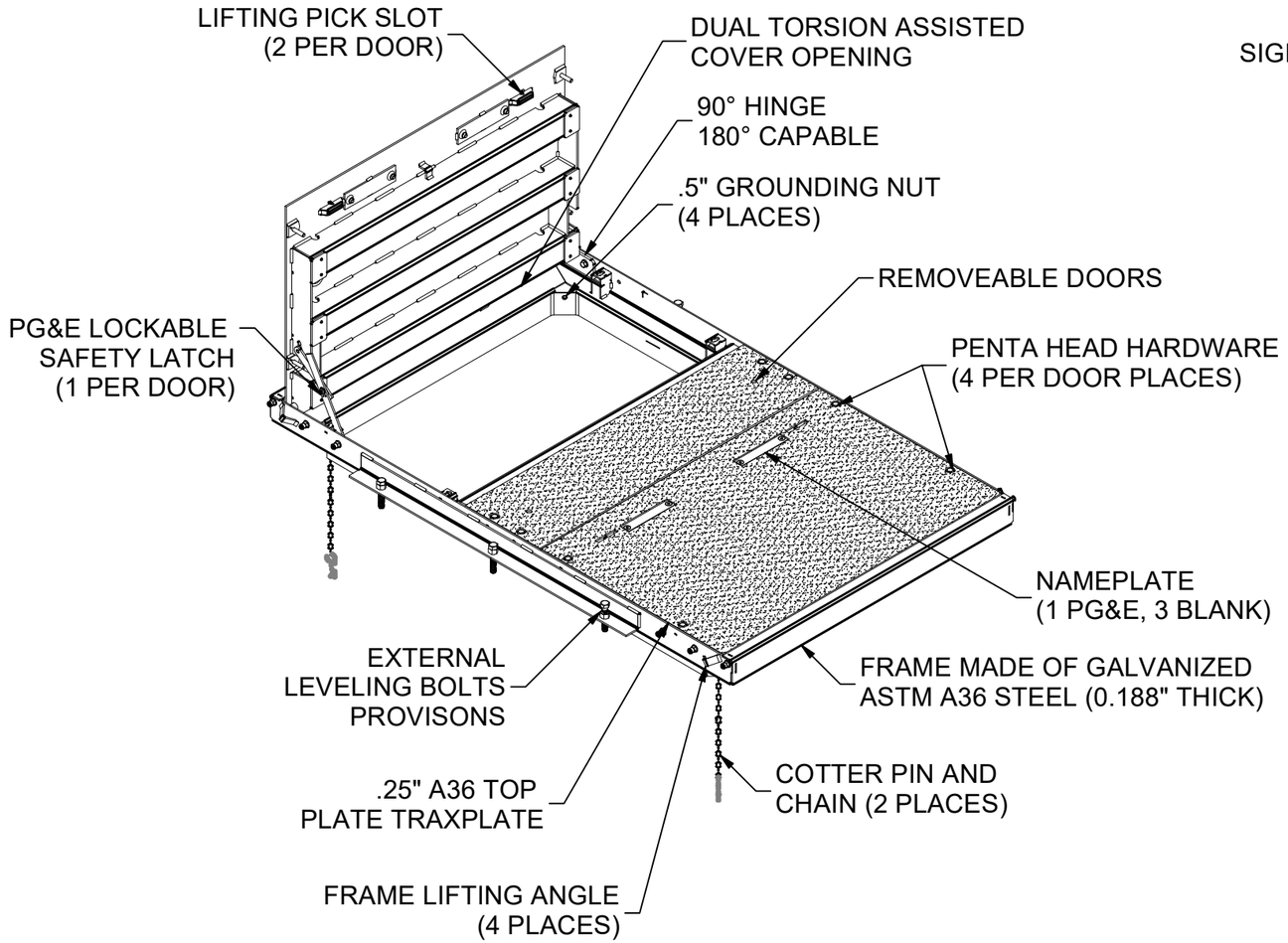

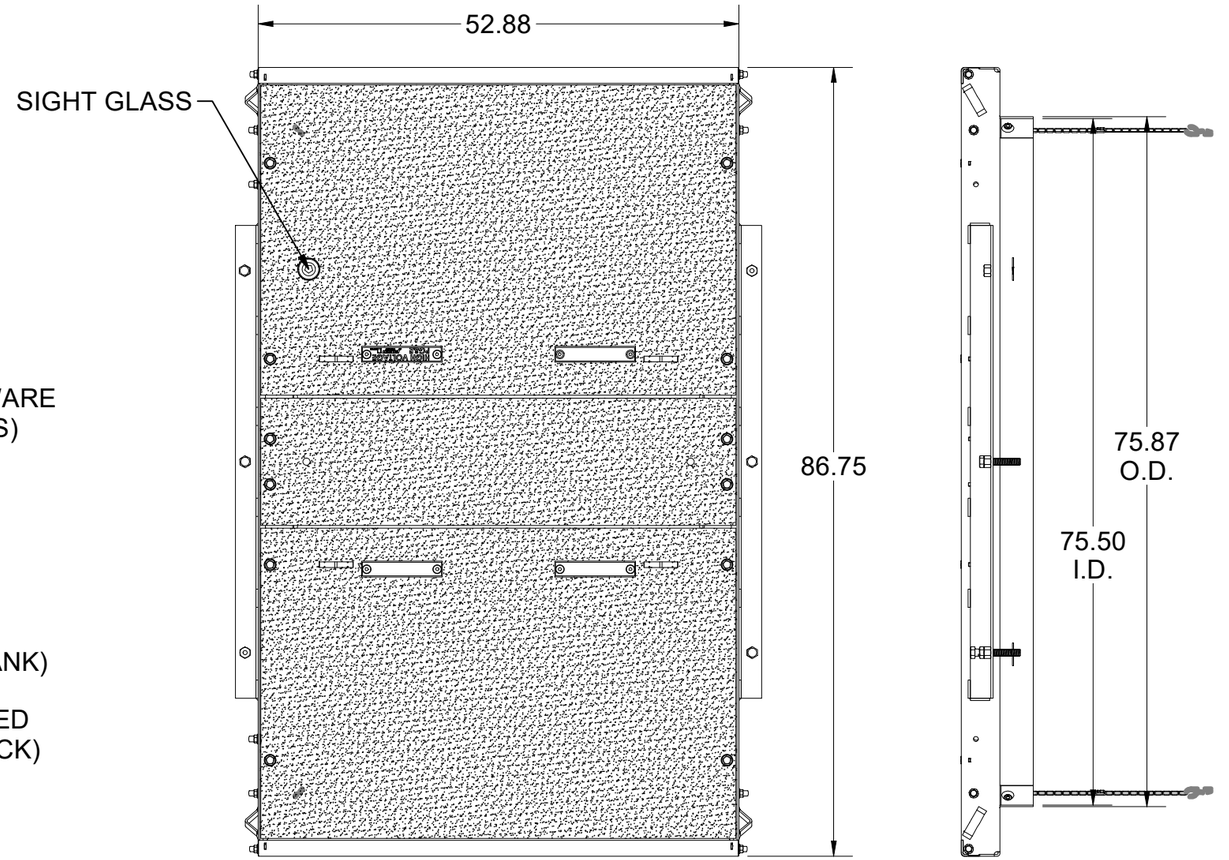

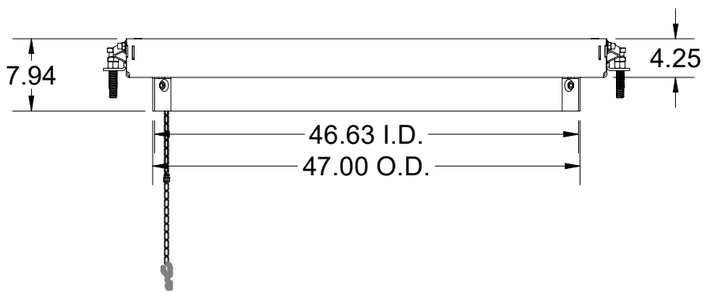

REVISION HISTORY		
REV	DESCRIPTION	DATE
A-1	INITIAL DESIGN CONCEPTE FOR IN HOUSE TESTING	9/23/22
B-1	ADDED LIFTING ANGLES TO FRAMES AND DOORS FOR SAFETY.	10/11/22
C-1	ADDED PEM NUTS TO FRAME CORNERS. SWITCHED .5 TORSION TO USE .4375 TORSION	11/8/22
D-1	PER PG&E REQUEST CHANGED THE SPRING NUT DESIGN TO SQUARE NUT DESIGN SAME AS TRANSFORMER. ADDED WELD FEATURE TO HAVE CONSISTANT WELD PATTERNNS	3/23/23
E-1	UPDATED NOTES AND WELD CALLOUTS PER PG&E COMMENTS DURING TRANSFORMER TESTING; CHANGED TO 2.25" COVER BOLTS; ADDED VISUAL WELDS AND MORE WELD INDICATOR NOTCHES FOR MFG PRECISION; CORRECTED TORSION ASSIST	6/7/23

LOADING: PG&E FVT

SURFACE:	TraxPlate™	FINISH:	Galvanized
WEIGHT:	1078.77 lbs	MARKING:	As Noted

JENSEN METALTECH
450 E. GLENDALE AVE. SPARKS. NV 89431
775-352-2716 FAX: 755-358-8127
JENSENMETALTECH.COM

©2023 Jensen Precast- All rights reserved.
All materials appearing as Jensen Precast documents and the like are proprietary work product and are protected under U.S. copyright and other laws.
Unless in conjunction with business conducted with Jensen Precast, any use of Jensen Precast work product without express, written consent is prohibited, and recipient is prohibited from distributing any and all work product to non-approved third parties under penalty of civil action.

DESCRIPTION: CAS2-4878-AH-TRX-G-SG-GR-PG&E-OH08-SPLICE FVT

48x78 Cover Assembly (ASTM Load N/A, 2 Door, Steel, Hinged, TraxPlate™, Galvanized , Sight Glass Grounding, PG&E) OH 08 SPLICE FVT

REV: E-1

SHEET: 1

PART NUMBER:	100002422	DRAWN BY:	A.Billett
CREATED:	9/23/2022	MODIFIED:	6/7/2023

100002422_Submittal.idw

DESIGN NOTES
- FRAME SIDE & END: ASTM A36
- WELD: GRADE E70
- UNLESS SPECIFIED, WELD LENGTHS ARE FULL LENGTH

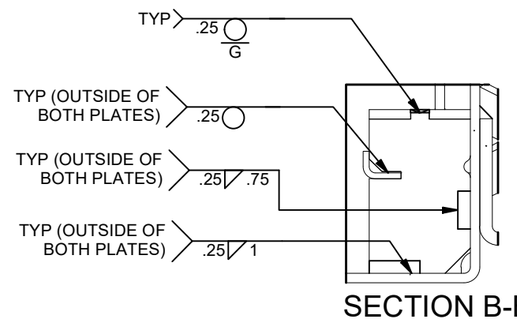

SECTION B-B

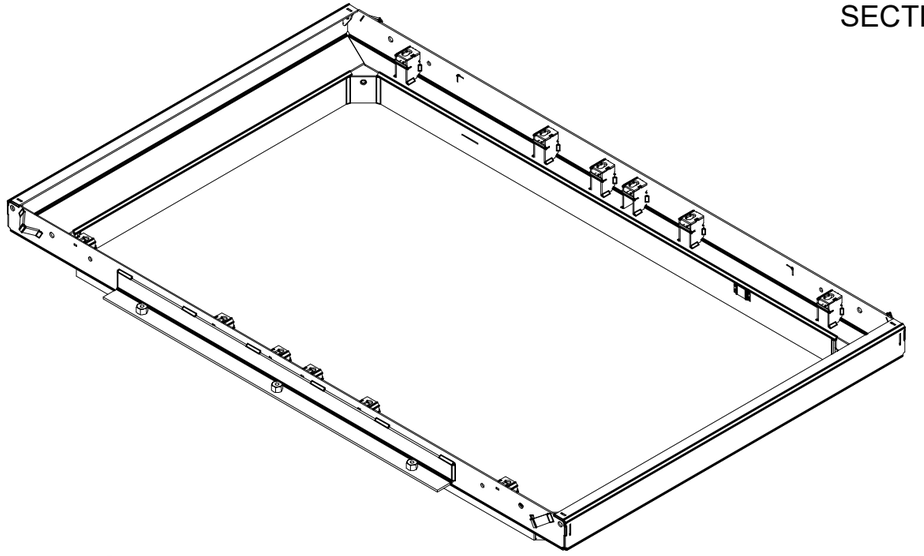

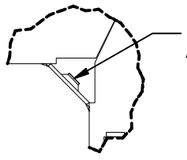

DETAIL C

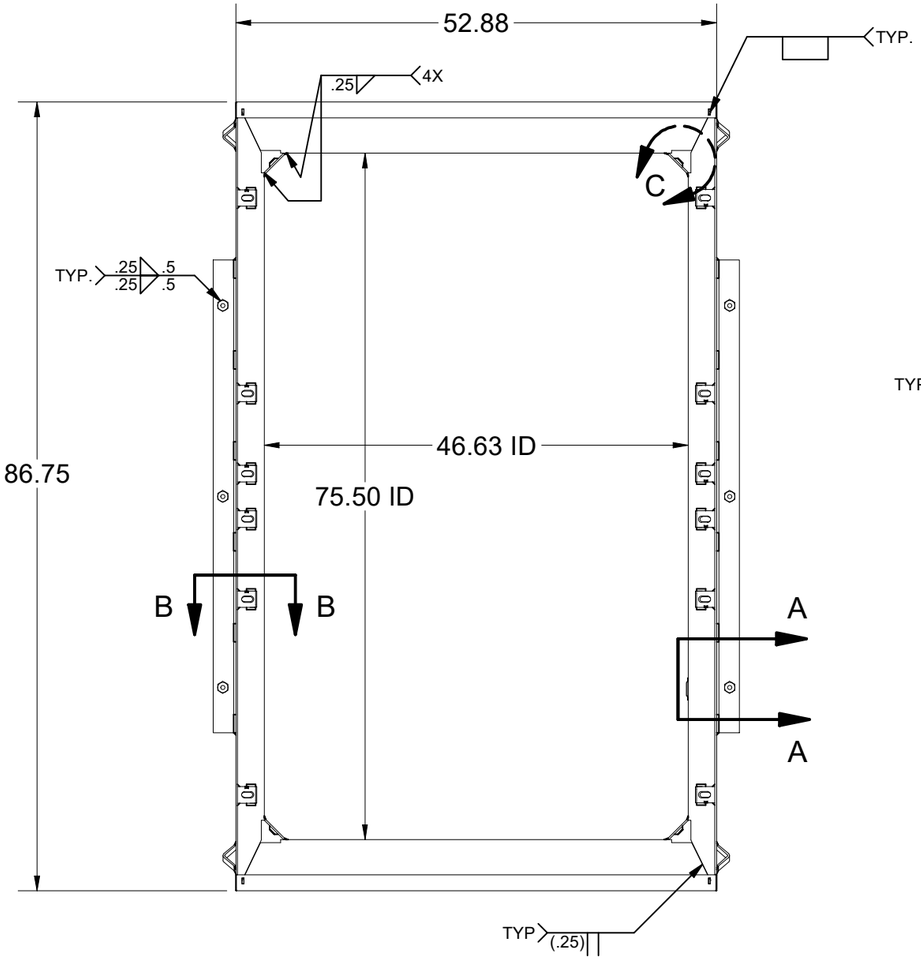

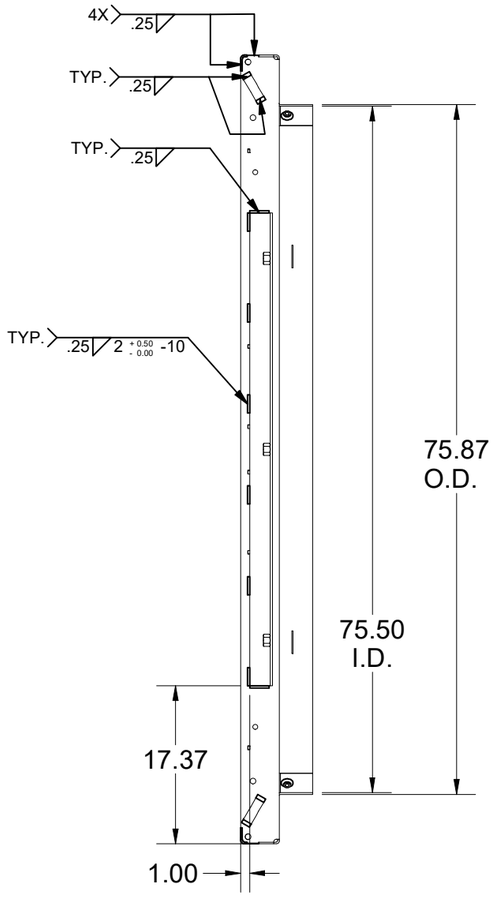

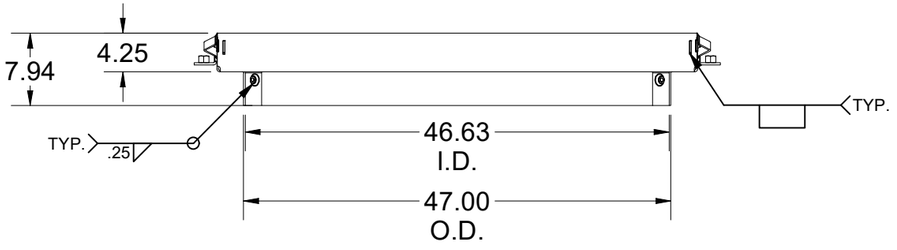

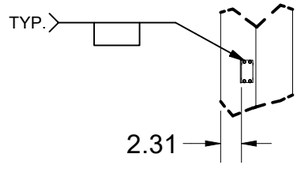

SECTION A-A

REVISION HISTORY		
REV	DESCRIPTION	DATE
A-1	INITIAL DESIGN CONCEPTE FOR IN HOUSE TESTING	9/23/22
B-1	ADDED LIFTING ANGLES TO FRAMES AND DOORS FOR SAFETY.	10/11/22
C-1	ADDED PEM NUTS TO FRAME CORNERS. SWITCHED .5 TORSION TO USE .4375 TORSION	11/8/22
D-1	PER PG&E REQUEST CHANGED THE SPRING NUT DESIGN TO SQUARE NUT DESIGN SAME AS TRANSFORMER. ADDED WELD FEATURE TO HAVE CONSISTANT WELD PATTERNNS	3/23/23
E-1	UPDATED NOTES AND WELD CALLOUTS PER PG&E COMMENTS DURING TRANSFORMER TESTING; CHANGED TO 2.25" COVER BOLTS; ADDED VISUAL WELDS AND MORE WELD INDICATOR NOTCHES FOR MFG PRECISION; CORRECTED TORSION ASSIST	6/7/23

MATERIAL FINISH: Galvanized

MATERIAL SURFACE: Smooth

JENSEN METALTECH

450 E. GLENDALE AVE. SPARKS. NV 89431
775-352-2716 FAX: 755-358-8127
JENSENMETALTECH.COM

©2023 Jensen Precast- All rights reserved. All materials appearing as Jensen Precast documents and the like are proprietary work product and are protected under U.S. copyright and other laws.
Unless in conjunction with business conducted with Jensen Precast, any use of Jensen Precast work product without express, written consent is prohibited, and recipient is prohibited from distributing any and all work product to non-approved third parties under penalty of civil action.

PART NUMBER & DESCRIPTION:	200068757 FAS-4878-AH-G-GR-PG&E-OH08-SPLICE FVT		REV: E-1
WEIGHT:	216.39 Lbs	DRAWN BY: A.Billett	SHEET: 2
CREATED:	4/17/2018	MODIFIED: 6/7/2023	

100002422_Submittal.idw

DESIGN NOTES
- TOP PLATE: ASTM A36
- BOTTOM CHANNEL: ASTM A36
- BEARING BAR: ASTM A36
- WELD: GRADE E70
- UNLESS SPECIFIED, WELD LENGTHS ARE FULL LENGTH

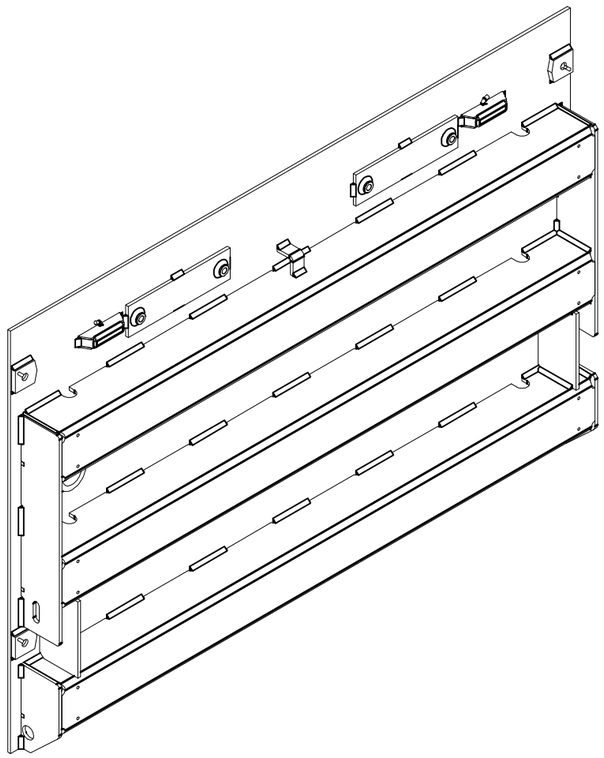

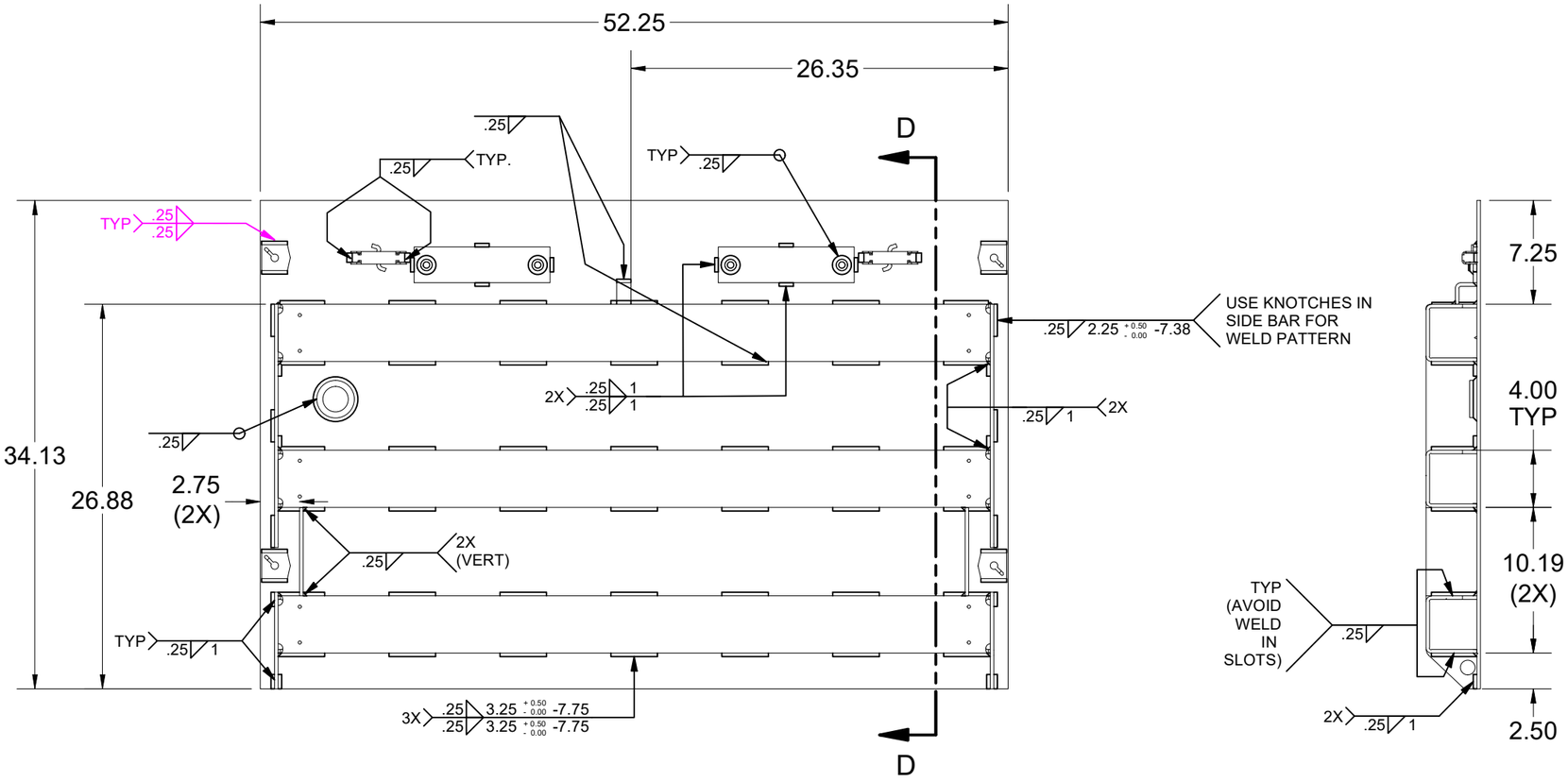

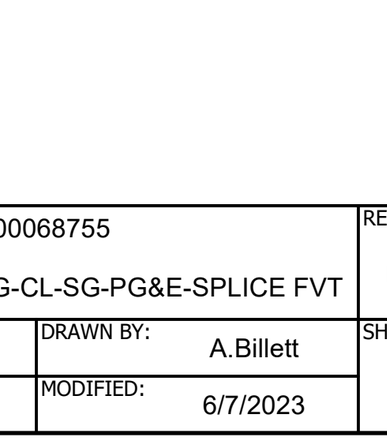

SECTION D-D

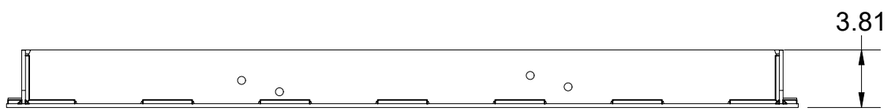

REVISION HISTORY		
REV	DESCRIPTION	DATE
A-1	INITIAL DESIGN CONCEPTE FOR IN HOUSE TESTING	9/23/22
B-1	ADDED LIFTING ANGLES TO FRAMES AND DOORS FOR SAFETY.	10/11/22
C-1	ADDED PEM NUTS TO FRAME CORNERS. SWITCHED .5 TORSION TO USE .4375 TORSION	11/8/22
D-1	PER PG&E REQUEST CHANGED THE SPRING NUT DESIGN TO SQUARE NUT DESIGN SAME AS TRANSFORMER. ADDED WELD FEATURE TO HAVE CONSISTANT WELD PATTERNNS	3/23/23
E-1	UPDATED NOTES AND WELD CALLOUTS PER PG&E COMMENTS DURING TRANSFORMER TESTING; CHANGED TO 2.25" COVER BOLTS; ADDED VISUAL WELDS AND MORE WELD INDICATOR NOTCHES FOR MFG PRECISION; CORRECTED TORSION ASSIST	6/7/23

MATERIAL FINISH: Galvanized

MATERIAL SURFACE: TraxPlate™

JENSEN METALTECH
450 E. GLENDALE AVE. SPARKS. NV 89431
775-352-2716 FAX: 755-358-8127
JENSENMETALTECH.COM

©2023 Jensen Precast- All rights reserved. All materials appearing as Jensen Precast documents and the like are proprietary work product and are protected under U.S. copyright and other laws.
Unless in conjunction with business conducted with Jensen Precast, any use of Jensen Precast work product without express, written consent is prohibited, and recipient is prohibited from distributing any and all work product to non-approved third parties under penalty of civil action.

PART NUMBER & DESCRIPTION: 200068755
DAS2-T-4878-H-TRX-G-CL-SG-PG&E-SPLICE FVT

REV: E-1

WEIGHT: 255.33 Lbs

DRAWN BY: A.Billett

CREATED: 9/23/2022

MODIFIED: 6/7/2023

SHEET: 3

100002422_Submittal.idw

DESIGN NOTES
- TOP PLATE: ASTM A36
- BOTTOM CHANNEL: ASTM A36
- BEARING BAR: ASTM A36
- WELD: GRADE E70
- UNLESS SPECIFIED, WELD LENGTHS ARE FULL LENGTH

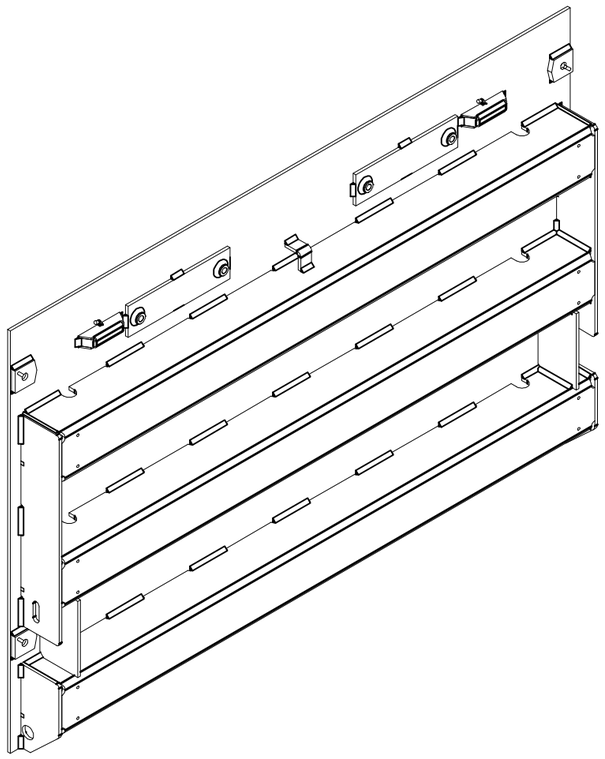

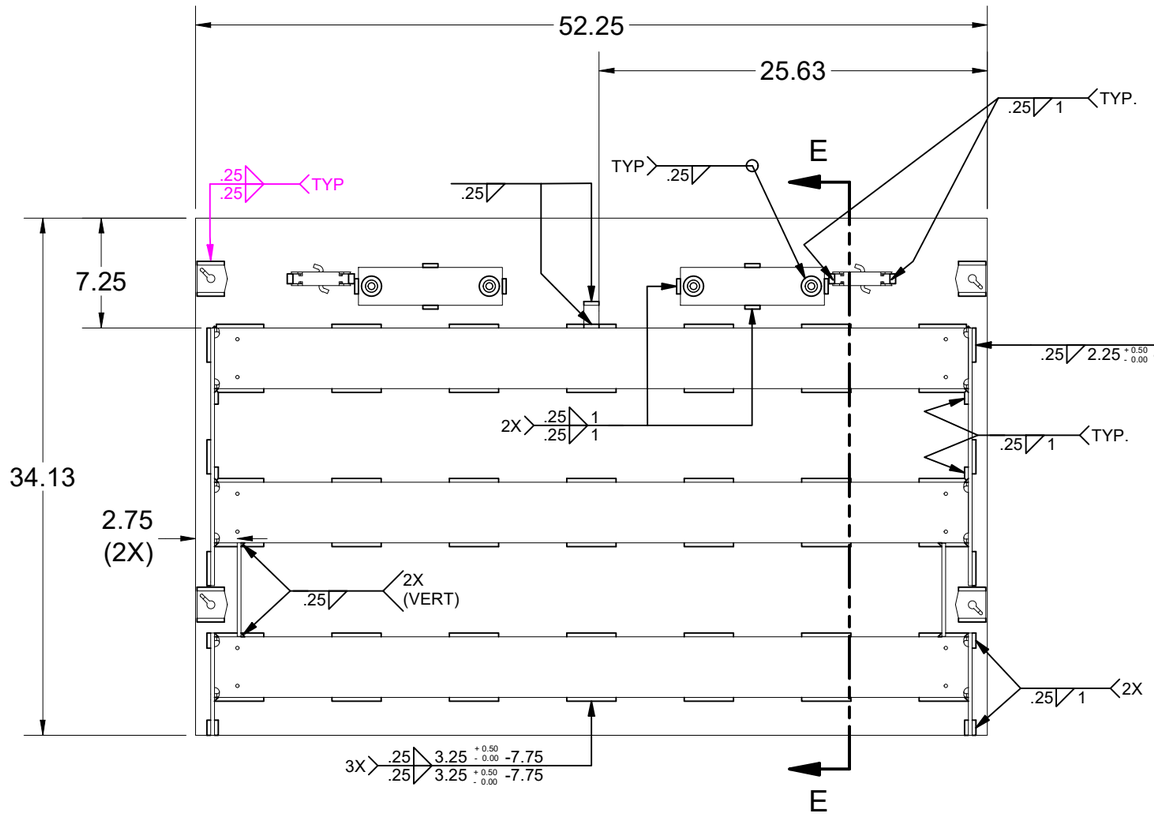

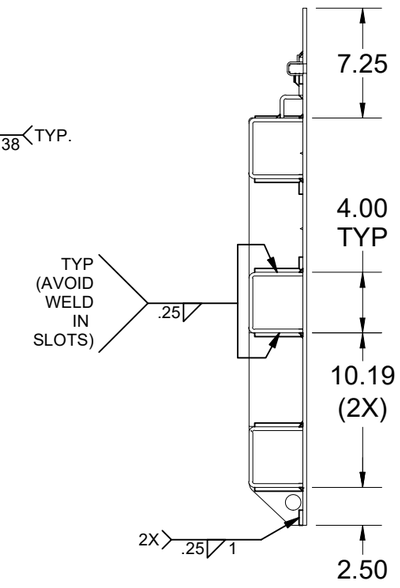

SECTION E-E



REVISION HISTORY		
REV	DESCRIPTION	DATE
A-1	INITIAL DESIGN CONCEPTE FOR IN HOUSE TESTING	9/23/22
B-1	ADDED LIFTING ANGLES TO FRAMES AND DOORS FOR SAFETY.	10/11/22
C-1	ADDED PEM NUTS TO FRAME CORNERS. SWITCHED .5 TORSION TO USE .4375 TORSION	11/8/22
D-1	PER PG&E REQUEST CHANGED THE SPRING NUT DESIGN TO SQUARE NUT DESIGN SAME AS TRANSFORMER. ADDED WELD FEATURE TO HAVE CONSISTANT WELD PATTERNNS	3/23/23
E-1	UPDATED NOTES AND WELD CALLOUTS PER PG&E COMMENTS DURING TRANSFORMER TESTING; CHANGED TO 2.25" COVER BOLTS; ADDED VISUAL WELDS AND MORE WELD INDICATOR NOTCHES FOR MFG PRECISION; CORRECTED TORSION ASSIST	6/7/23

MATERIAL FINISH: Galvanized

MATERIAL SURFACE: TraxPlate™

JENSEN METALTECH
450 E. GLENDALE AVE. SPARKS. NV 89431
775-352-2716 FAX: 755-358-8127
JENSENMETALTECH.COM

©2023 Jensen Precast- All rights reserved. All materials appearing as Jensen Precast documents and the like are proprietary work product and are protected under U.S. copyright and other laws. Unless in conjunction with business conducted with Jensen Precast, any use of Jensen Precast work product without express, written consent is prohibited, and recipient is prohibited from distributing any and all work product to non-approved third parties under penalty of civil action.

PART NUMBER & DESCRIPTION: 200068751 DAS2-T-4878-H-TRX-G-PG&E-SPLICE FVT

REV: E-1

WEIGHT: 254.64 Lbs

DRAWN BY: A.Billett

SHEET: 4

CREATED: 4/23/2018

MODIFIED: 6/7/2023

100002422_Submittal.idw

DESIGN NOTES
- TOP PLATE: ASTM A36
- STIFFENER PLATE: ASTM A36
- BEARING BAR: ASTM A36
- WELD: GRADE E70
- UNLESS SPECIFIED, WELD LENGTHS ARE FULL LENGTH

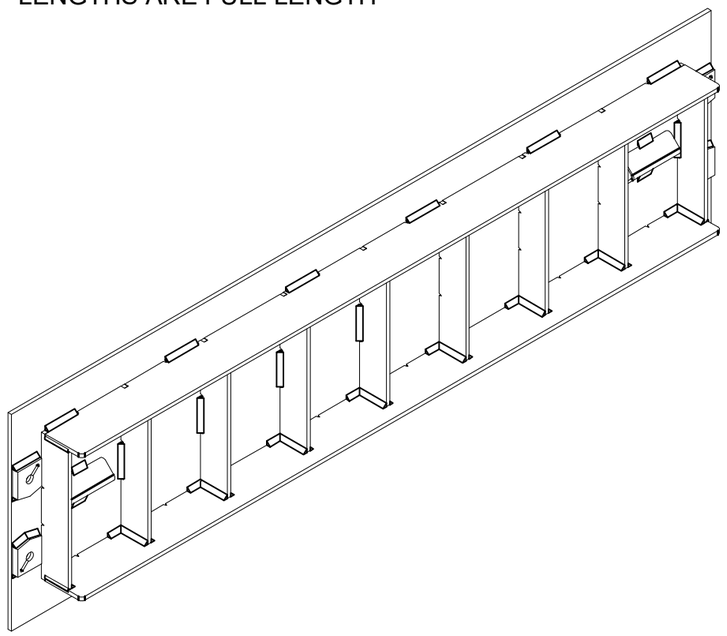

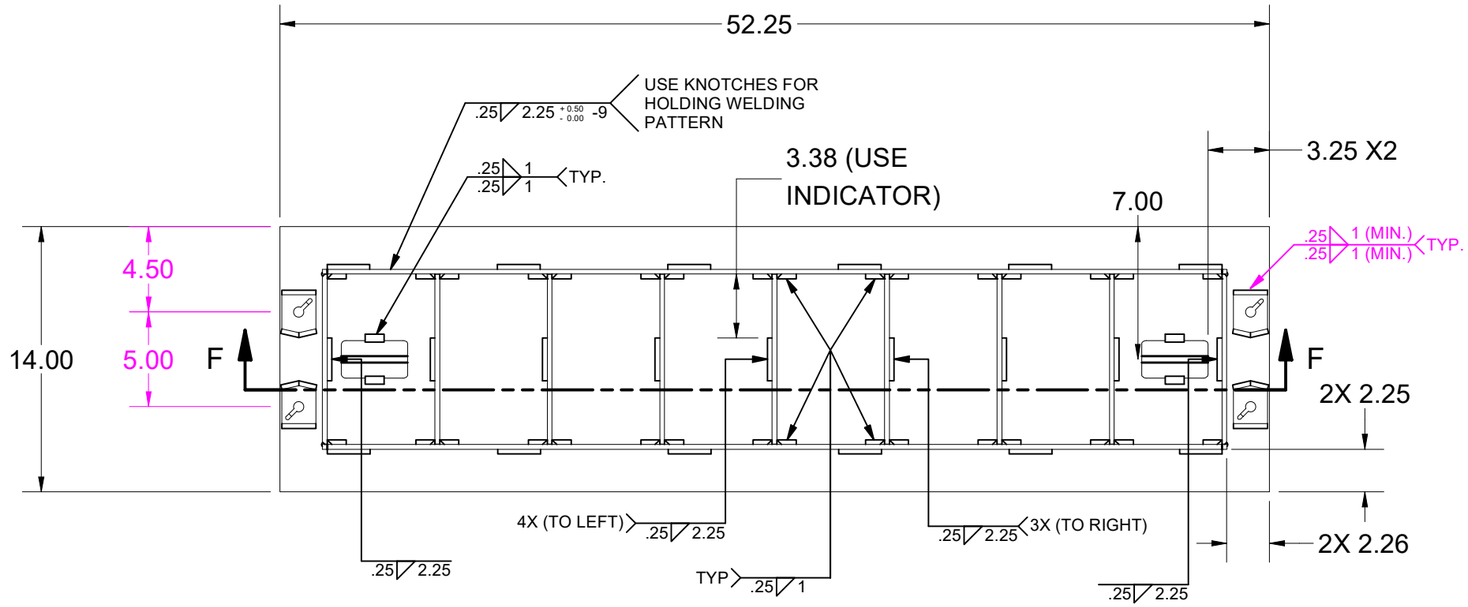

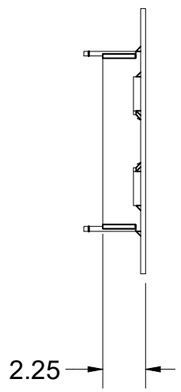

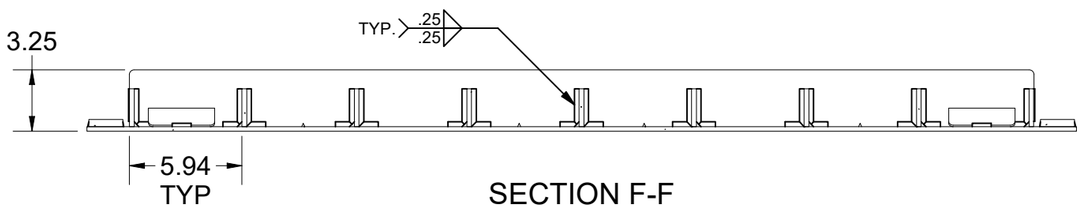

SECTION F-F
SCALE 1 / 8

REVISION HISTORY		
REV	DESCRIPTION	DATE
A-1	INITIAL DESIGN CONCEPTE FOR IN HOUSE TESTING	9/23/22
B-1	ADDED LIFTING ANGLES TO FRAMES AND DOORS FOR SAFETY.	10/11/22
C-1	ADDED PEM NUTS TO FRAME CORNERS. SWITCHED .5 TORSION TO USE .4375 TORSION	11/8/22
D-1	PER PG&E REQUEST CHANGED THE SPRING NUT DESIGN TO SQUARE NUT DESIGN SAME AS TRANSFORMER. ADDED WELD FEATURE TO HAVE CONSISTANT WELD PATTERNNS	3/23/23
E-1	UPDATED NOTES AND WELD CALLOUTS PER PG&E COMMENTS DURING TRANSFORMER TESTING; CHANGED TO 2.25" COVER BOLTS; ADDED VISUAL WELDS AND MORE WELD INDICATOR NOTCHES FOR MFG PRECISION; CORRECTED TORSION ASSIST	6/7/23

MATERIAL FINISH: Galvanized

MATERIAL SURFACE: TraxPlate™

JENSEN METALTECH
450 E. GLENDALE AVE. SPARKS. NV 89431
775-352-2716 FAX: 755-358-8127
JENSENMETALTECH.COM

©2023 Jensen Precast- All rights reserved. All materials appearing as Jensen Precast documents and the like are proprietary work product and are protected under U.S. copyright and other laws. Unless in conjunction with business conducted with Jensen Precast, any use of Jensen Precast work product without express, written consent is prohibited, and recipient is prohibited from distributing any and all work product to non-approved third parties under penalty of civil action.

PART NUMBER & DESCRIPTION: 200068747
DAS1-T-4878-D-TRX-G-PG&E-SPLICE FVT

REV: E-1

WEIGHT: 86.37 Lbs

DRAWN BY: A.Billett

CREATED: 9/23/2022

MODIFIED: 6/7/2023

SHEET: 5

100002422_Submittal.idw

DESIGN NOTES
- HSS TUBING: ASTM A500 GRADE B
- ANGLES: ASTM A36
- WELD: GRADE E70
- UNLESS SPECIFIED, WELD LENGTHS ARE FULL LENGTH

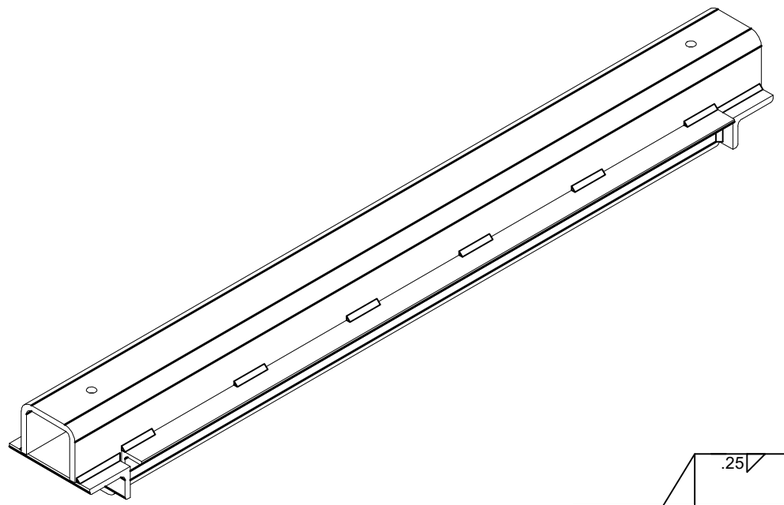

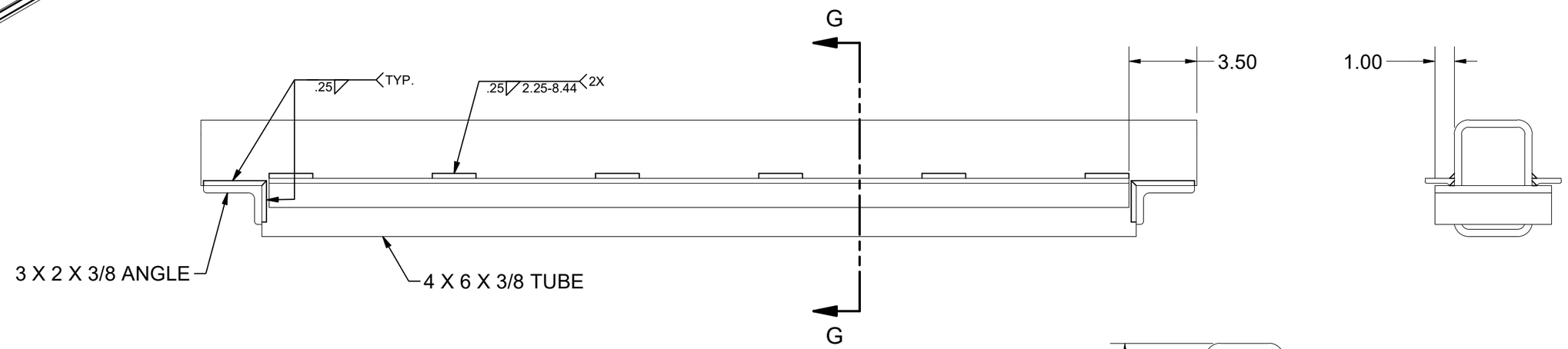

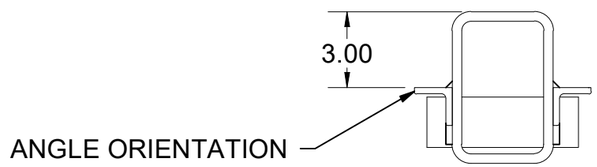

SECTION G-G
SCALE 1/6

REVISION HISTORY		
REV	DESCRIPTION	DATE
A-1	INITIAL DESIGN CONCEPTE FOR IN HOUSE TESTING	9/23/22
B-1	ADDED LIFTING ANGLES TO FRAMES AND DOORS FOR SAFETY.	10/11/22
C-1	ADDED PEM NUTS TO FRAME CORNERS. SWITCHED .5 TORSION TO USE .4375 TORSION	11/8/22
D-1	PER PG&E REQUEST CHANGED THE SPRING NUT DESIGN TO SQUARE NUT DESIGN SAME AS TRANSFORMER. ADDED WELD FEATURE TO HAVE CONSISTANT WELD PATTERNNS	3/23/23
E-1	UPDATED NOTES AND WELD CALLOUTS PER PG&E COMMENTS DURING TRANSFORMER TESTING; CHANGED TO 2.25" COVER BOLTS; ADDED VISUAL WELDS AND MORE WELD INDICATOR NOTCHES FOR MFG PRECISION; CORRECTED TORSION ASSIST	6/7/23

MATERIAL FINISH: Galvanized

MATERIAL SURFACE: Smooth

JENSEN METALTECH
450 E. GLENDALE AVE. SPARKS. NV 89431
775-352-2716 FAX: 755-358-8127
JENSENMETALTECH.COM

©2023 Jensen Precast- All rights reserved. All materials appearing as Jensen Precast documents and the like are proprietary work product and are protected under U.S. copyright and other laws. Unless in conjunction with business conducted with Jensen Precast, any use of Jensen Precast work product without express, written consent is prohibited, and recipient is prohibited from distributing any and all work product to non-approved third parties under penalty of civil action.

PART NUMBER & DESCRIPTION: 200076143 Support Beam 57.25in W Beam right & left 4878 FVT

REV: E-1

WEIGHT: 113.9 Lbs

DRAWN BY: A.Billett

SHEET: 6

CREATED: 6/4/2023

MODIFIED: 6/7/2023

100002422_Submittal.idw