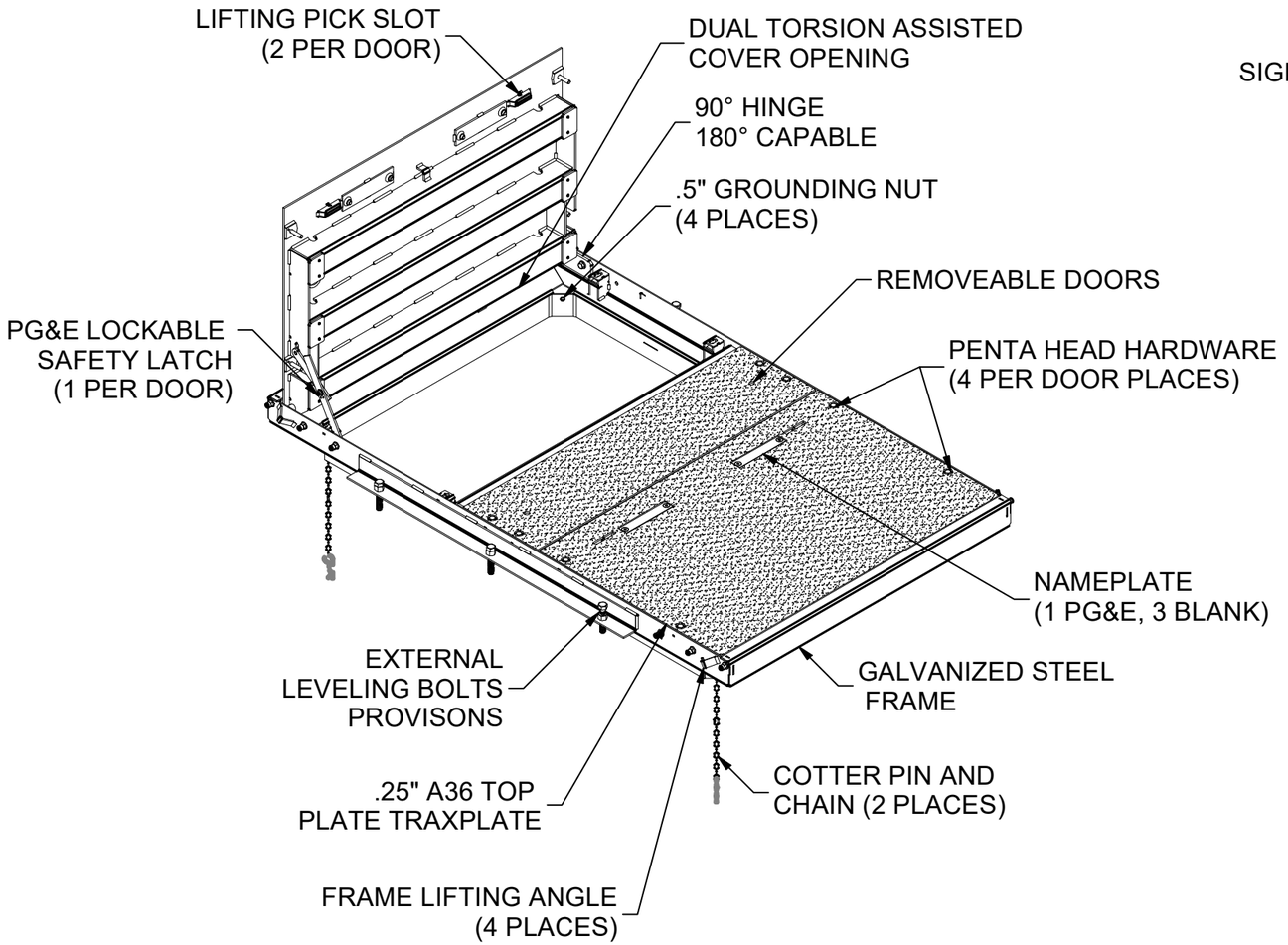

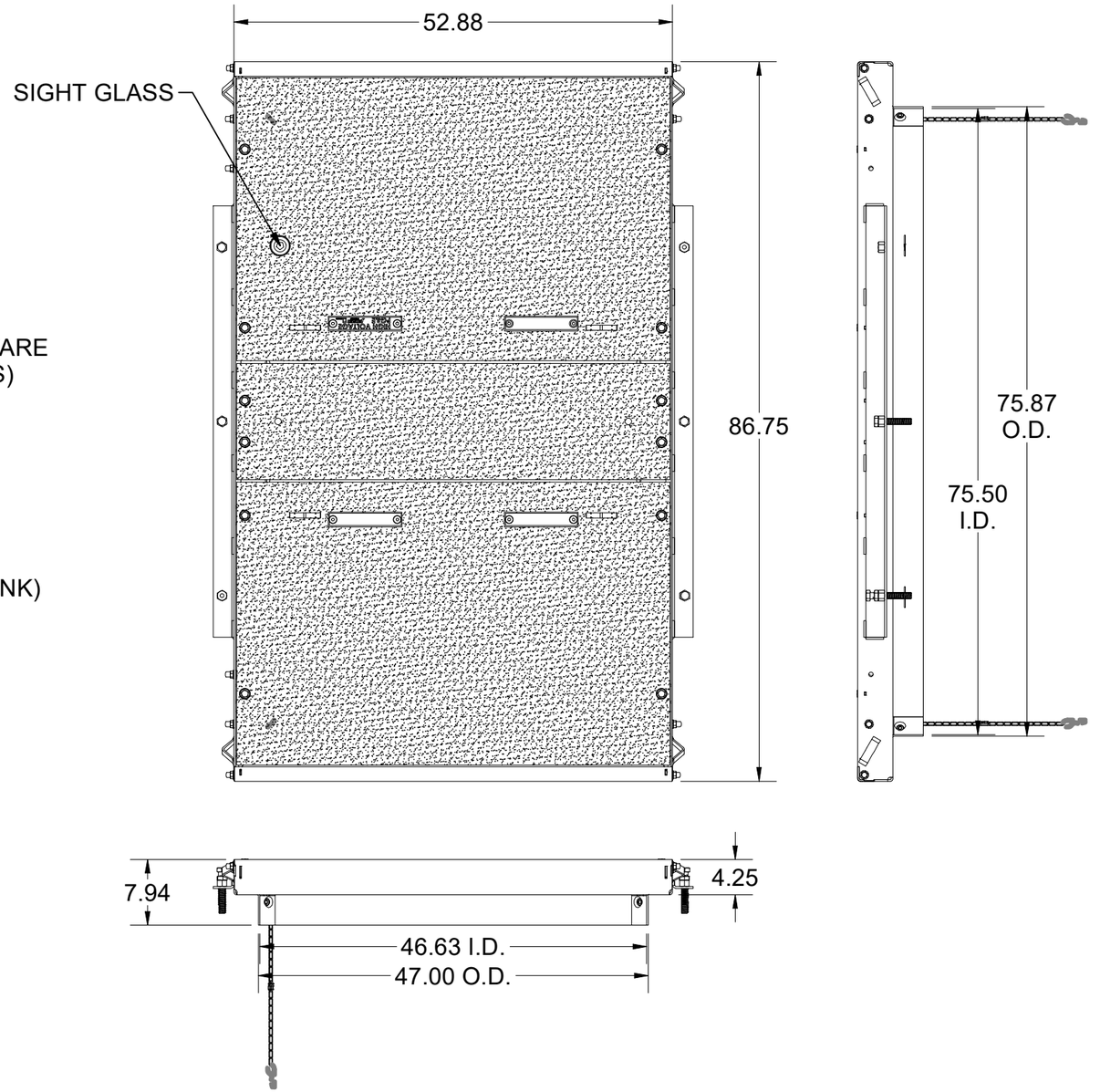

100002422.idw

LOADING CRITERIA: PG&E FVT

SURFACE:	TraxPlate™	FINISH:	Galvanized
WEIGHT:	1078.77 lbs	MARKING:	

Infrastructure
JENSEN
527 Dunn Circle, Sparks, NV 89431
775-352-2716 FAX: 755-358-8127
JENSENMETALTECH.COM

©2026 Jensen Infrastructure - All rights reserved.
All materials appearing as Jensen Infrastructure documents and the like are proprietary work product and are protected under U.S. copyright and other laws. Unless in conjunction with business conducted with Jensen Infrastructure , any use of Jensen Infrastructure work product without express, written consent is prohibited, and recipient is prohibited from distributing any and all work product to non-approved third parties under penalty of civil action.
This product shall only be produced in a Jensen Infrastructure facility.

DESCRIPTION: CAS2-4878-AH-TRX-G-SG-GR-PG&E-OH08-SPLICE FVT

48x78 Cover Assembly (ASTM Load N/A, 2 Door, Steel, Hinged, TraxPlate™, Galvanized , Sight Glass Grounding, PG&E) OH 08 SPLICE FVT

PART NUMBER:	100002422	DRAWN BY:	R. Dohr
CREATED:	9/23/2022	MODIFIED:	2/3/2026

REV: E-1-2

SHEET: 1

BILL OF MATERIALS

ITEM	ITEM QTY	QTY	PART NUMBER	DESCRIPTION	PART NAME
1	1	1	200068751	DAS2-T-4878-H-TRX-G-PG&E-SPLICE FVT	200068751
2	1	1	200068755	DAS2-T-4878-H-TRX-G-SG-PG&E-SPLICE FVT	200068755
3	1	1	200068757	FAS-4878-AH-G-GR-PG&E-OH08-SPLICE FVT	200068757
4	1	1	200068747	DAS1-T-4878-D-TRX-G-PG&E-SPLICE FVT	200068747
5	2	2	200076143	Support Beam 57.25in W Beam right & left 4878 FVT	200076143
6	2	2	200069179	HINGE ASSY PG&E FVT RIGHT .4375	200069179
7	2	2	200076142	HINGE ASSY PG&E FVT LEFT .5000	200069493
8	10	10	100026256	LOW-STRENGTH STEEL FLANGE NUT, 1/2" - 13 THREAD SIZE	100026256
9	26	26	100011418	WASHER FLAT 1/2 NARROW ZINC	100011418
10	2	2	100008010	BOLT HEX 1/2-13 UNC 1.75 ZINC	100008010
11	10	10	100007939	CAP VINYL .467 X 1/2	100007939
12	1	1	100007928	SIGHT GLASS	100007928
13	12	12	100007925	PAD INSULATING POLYURETHANE LARGE 4.00 X 2.75	100007925
14	24	24	100007882	Rivet Blind Grip .1875" Large Domed Head Range-0.376-0.5" Steel	100007882
15	8	8	100007873	BOLT SHCS 3/8-16 X 1-1/4 PLATED	100007873
16	4	4	100007869	BOLT SHCS 1/2-13 X 1-3/4 SS	100007869
17	8	8	100007859	RIVET NUT 3/8-16 FLAT KNURLED	100007859
18	8	8	100007733	Bolt Socket Flat Countersunk Head - 1/2-13 UNC - Grade 5 - Zinc - FT - 1"	100007733
19	2	2	100007726	TORSION HEX ROD 7/16 X 36 RAW	100007726
20	3	3	100007562	NAME PLATE PLEXI PG&E	100007562
21	2	2	100007492	HEX NUT NYLOCK - 1/2-13 UNC - GR5 - ZINC	100007492
22	1	1	100005058	NAME PLATE CAST ALUM PG&E - HIGH VOLTAGE	100005058
23	12	12	100007749	BOLT PENTA 1/2-13 UNC 0.875 HEAD 2.25L SS DRILLED	100004452
24	4	4	100003823	Hex Bolt 1/2-13 UNC ZINC - PT - 1.5"	100003823
25	6	6	100003782	HEX COIL BOLT 3/4 X 4 PLAIN	100003782
26	2	2	100003484	Hex Bolt 1/2-13 UNC ZINC - FT - 0.75"	100003484
27	2	2	200068923	PG&E FVT SAFETY LATCH	200068923
28	2	2	100041563	16" CHAIN SAFETY W/WASHER	100041563
29	8	8	200072509	Square Strut Channel Nut, 1/2"-13 Thread Size	200072509
30	2	2	100007681	OFFSET SPRING MOUNT .50	100007681
31	2	2	100007670	SPRING MOUNT ASSY .438	100007670
32	2	2	100007727	TORSION HEX ROD .5 x 36in RAW	100007727

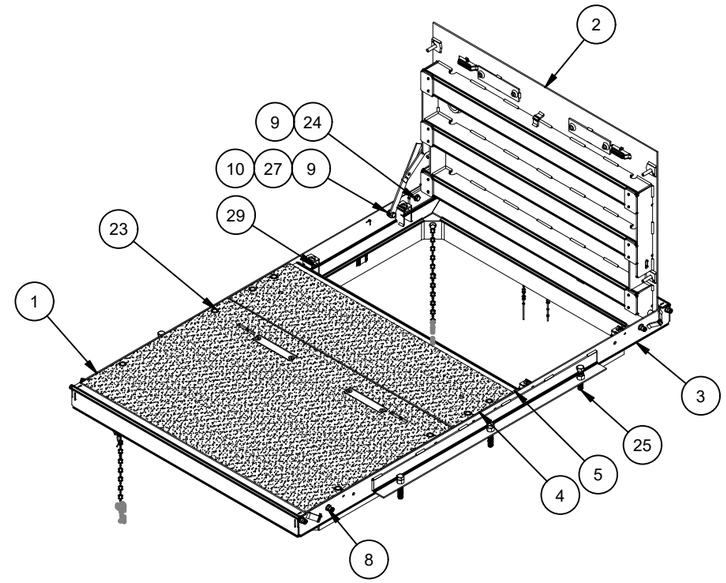

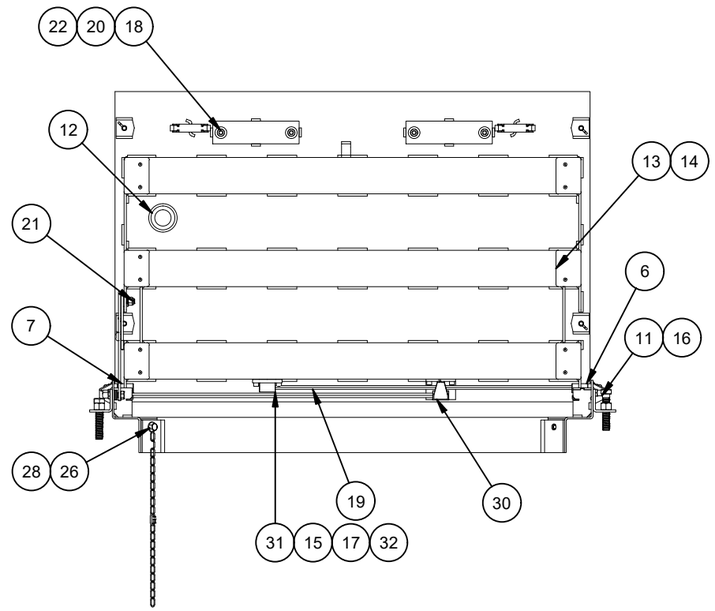

100002422.idw

REVISION HISTORY		
REV	DESCRIPTION	DATE
A-1	INITIAL DESIGN CONCEPTE FOR IN HOUSE TESTING	9/23/22
B-1	ADDED LIFTING ANGLES TO FRAMES AND DOORS FOR SAFETY.	10/11/22
C-1	ADDED PEM NUTS TO FRAME CORNERS. SWITCHED .5 TORSION TO USE .4375 TORSION	11/8/22
D-1	PER PG&E REQUEST CHANGED THE SPRING NUT DESIGN TO SQUARE NUT DESIGN SAME AS TRANSFORMER. ADDED WELD FEATURE TO HAVE CONSISTANT WELD PATTERNNS; CORRECTED TORSION ASSIST	3/23/23
E-1	UPDATED NOTES AND WELD CALLOUTS PER PG&E COMMENTS DURING TRANSFORMER TESTING; CHANGED TO 2.25" COVER BOLTS; ADDED VISUAL WELDS AND MORE WELD INDICATOR NOTCHES FOR MFG PRECISION; CORRECTED TORSION ASSIST	6/5/23
E-1-1	ADDED GALV DRAIN NOTCHES TO STIFFENERS, UPDATED WASHERS	10/13/2025
E-1-2	SWAPPED J CONE BASES TO CAM TOWER BASES	2/3/2026

MATERIAL FINISH: Galvanized

MATERIAL SURFACE: TraxPlate™

Infrastructure
JENSEN

527 Dunn Circle, Sparks, NV 89431
775-352-2716 FAX: 755-358-8127
JENSENMETALTECH.COM

©2026 Jensen Infrastructure - All rights reserved.
All materials appearing as Jensen Infrastructure documents and the like are proprietary work product and are protected under U.S. copyright and other laws. Unless in conjunction with business conducted with Jensen Infrastructure , any use of Jensen Infrastructure work product without express, written consent is prohibited, and recipient is prohibited from distributing any and all work product to non-approved third parties under penalty of civil action.
This product shall only be produced in a Jensen Infrastructure facility.

PART NUMBER & DESCRIPTION: 100002422 CAS2-4878-AH-TRX-G-SG-GR-PG&E-OH08-SPLICE FVT

REV: E-1-2

WEIGHT: 1078.77 Lbs

DRAWN BY: R. Dohr

SHEET: 2

CREATED: 9/23/2022

MODIFIED: 2/3/2026

BILL OF MATERIALS

ITEM	UNIT QTY	QTY	PART NUMBER	DESCRIPTION	PART NAME
1	16.974 lbmass	33.947 lbmass	200069890	Frame Component - Leveling Bar	200069890
2	0.550 lbmass	2.200 lbmass	100007734	Frame Component Steel	200068759
3	1	4	200018691	FRAME BOLT DOUBLER SLOT	200018691
4	44.958 lbmass	89.915 lbmass	100007734	Frame Component Steel Frame Side, Adjustable	200068761
5	1	12	200069094	STANDOFF BOLTING PLATFORM	200069094
6	38.226 lbmass	76.452 lbmass	100007734	Frame Component Steel Frame End, Adjustable	200068760
7	0.313 lbmass	3.755 lbmass	100007734	STANDOFF SIDEWALL	200069158
8	0.450 lbmass	5.403 lbmass	100007734	SQUARE NUT BRACKET-CUSTOM PG&E FVT	200069159
9	1	4	100007728	NUT SELF-CLINCH 1/2-13 S-0813-1 RAW	100007728
10	1	1	100007700	SIGHT GLASS LIGHT CLIP	100007700
11	1	4	100007641	FRAME LIFTING BRACKET	100007641
12	1	6	100007011	HEX COIL NUT 3/4-4.5 PLAIN	100007011

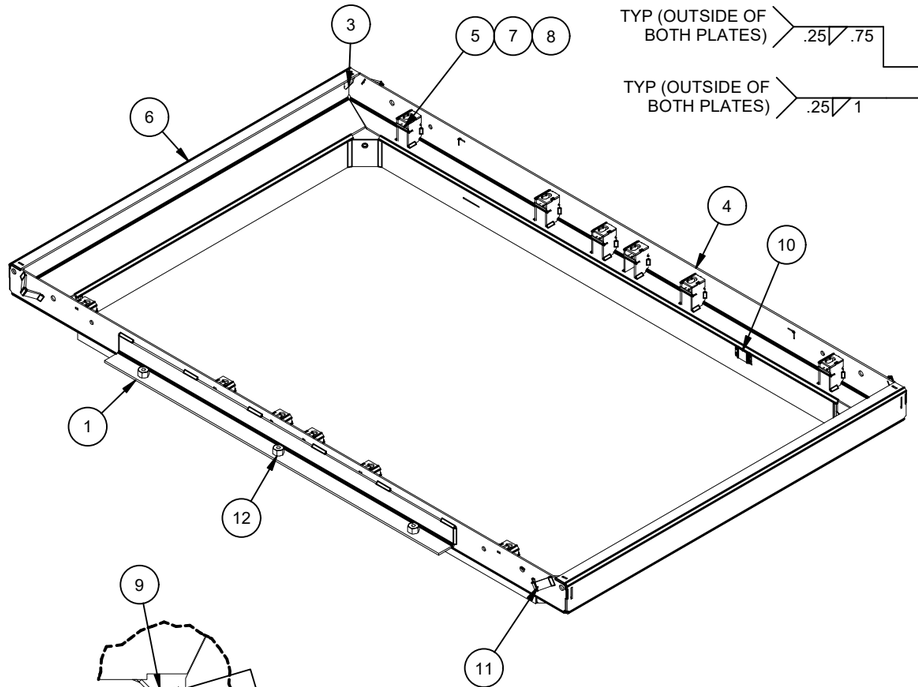

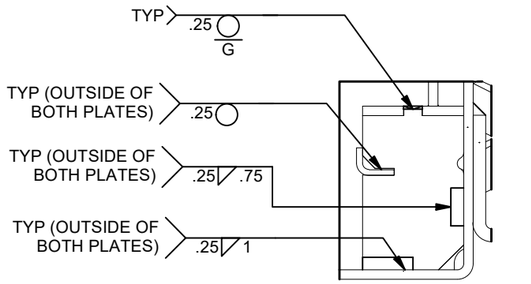

SECTION T-T

DETAIL Y

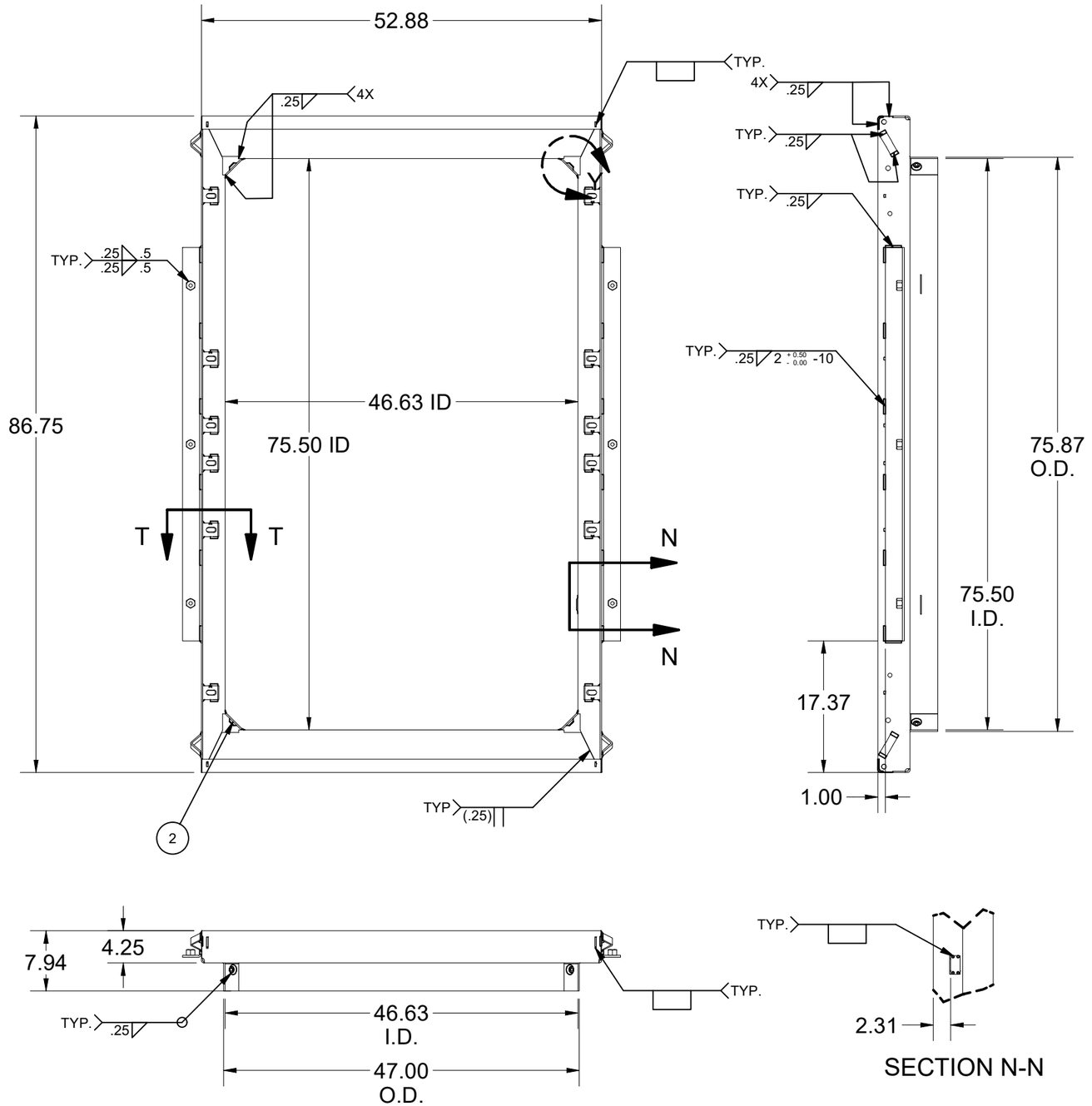

SECTION N-N

100002422.idw

MATERIAL FINISH: Galvanized	Infrastructure JENSEN 527 Dunn Circle, Sparks, NV 89431 775-352-2716 FAX: 755-358-8127 *JENSENMETALTECH.COM*	©2026 Jensen Infrastructure - All rights reserved. All materials appearing as Jensen Infrastructure documents and the like are proprietary work product and are protected under U.S. copyright and other laws. Unless in conjunction with business conducted with Jensen Infrastructure , any use of Jensen Infrastructure work product without express, written consent is prohibited, and recipient is prohibited from distributing any and all work product to non-approved third parties under penalty of civil action. This product shall only be produced in a Jensen Infrastructure facility.	PART NUMBER & DESCRIPTION: 200068757 FAS-4878-AH-G-GR-PG&E-OH08-SPLICE FVT
MATERIAL SURFACE: Smooth			WEIGHT: 216.39 Lbs / DRAWN BY: R. Dohr / CREATED: 9/23/2022 / MODIFIED: 2/3/2026

REV: E-1-2

SHEET: 3

BILL OF MATERIALS

ITEM	UNIT QTY	QTY	PART NUMBER	DESCRIPTION	PART NAME
1	123.330 lbmass	123.330 lbmass	100007735	Door Component Steel Plate, Bottom Nameplate	200068756
2	4.220 lbmass	8.440 lbmass	100007735	Door Component Steel Side Bar	200068754
3	36.509 lbmass	109.528 lbmass	100007735	Door Component Steel Channel	200068752
4	1.395 lbmass	2.791 lbmass	100007735	Door Component Steel Side Bar	200074044
6	1.547 lbmass	3.095 lbmass	100007735	Door Component Steel Lap Bar	200074061
7	1	1	100041280	SIGHT GLASS BUSHING STL	100041280
8	1.638 lbmass	3.276 lbmass	100007735	PG&E NAME PLATE BACKING PLATE	100021175
9	1	2	100007916	CLIP PICK HOLE 304SS	100007916
10	1	4	100007860	NUT SELF-CLINCH 1/2-13 CLS-0813-1 SS	100007860
11	1	2	100007697	LIFT COVER STL	100007697
12	1	1	100007647	LIFTING BRACKET STEEL LEAF	100007647
13	1	4	100007675	CAM BASE	100007675

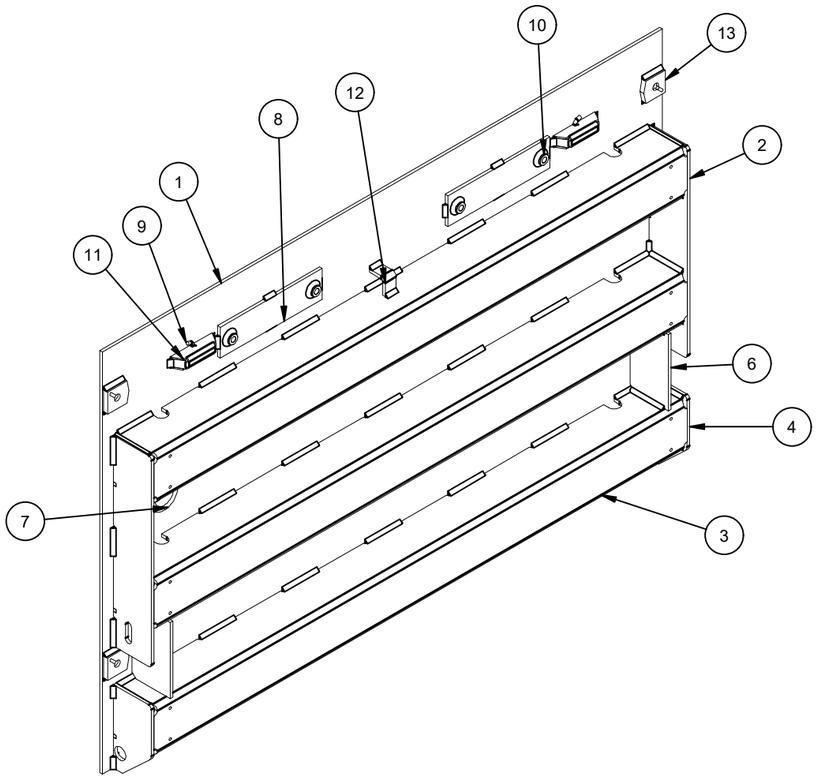

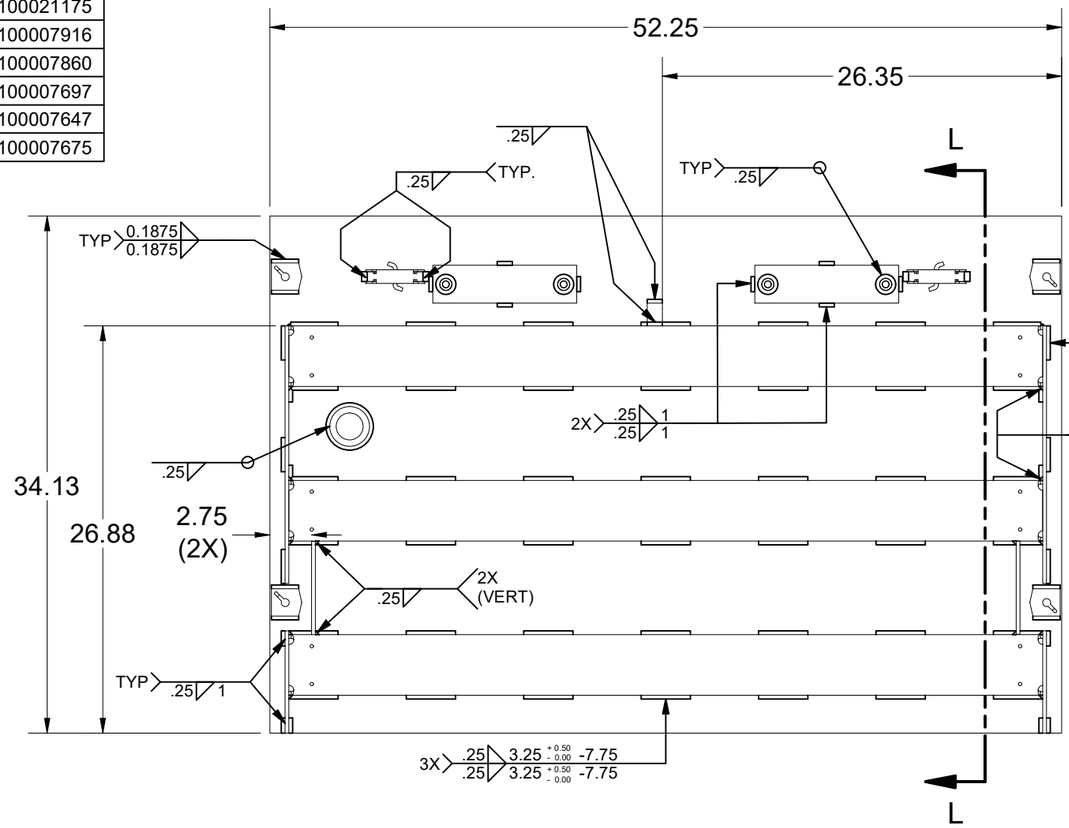

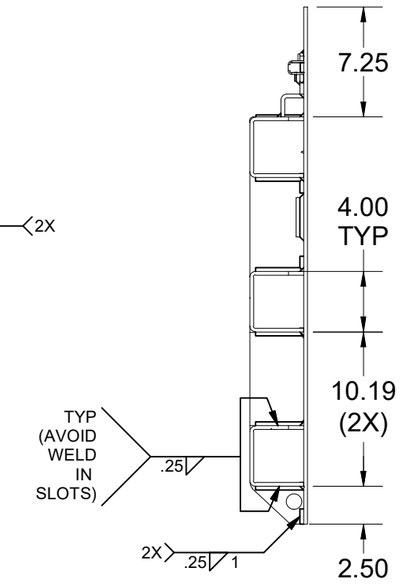

SECTION L-L

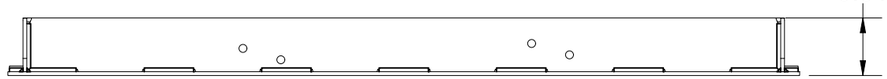

MATERIAL FINISH: Galvanized	Infrastructure JENSEN 527 Dunn Circle, Sparks, NV 89431 775-352-2716 FAX: 755-358-8127 *JENSENMETALTECH.COM*	©2026 Jensen Infrastructure - All rights reserved. All materials appearing as Jensen Infrastructure documents and the like are proprietary work product and are protected under U.S. copyright and other laws. Unless in conjunction with business conducted with Jensen Infrastructure , any use of Jensen Infrastructure work product without express, written consent is prohibited, and recipient is prohibited from distributing any and all work product to non-approved third parties under penalty of civil action. This product shall only be produced in a Jensen Infrastructure facility.	PART NUMBER & DESCRIPTION: 200068755 DAS2-T-4878-H-TRX-G-CL-SG-PG&E-SPLICE FVT
MATERIAL SURFACE: TraxPlate™			WEIGHT: 255.33 Lbs / DRAWN BY: R. Dohr / CREATED: 9/23/2022 / MODIFIED: 2/3/2026

REV: E-1-2

SHEET: 4

100002422.idw

BILL OF MATERIALS

ITEM	UNIT QTY	QTY	PART NUMBER	DESCRIPTION	PART NAME
1	123.664 lbmass	123.664 lbmass	100007735	Door Component Steel Plate, Top Nameplate	200068753
2	4.220 lbmass	8.440 lbmass	100007735	Door Component Steel Side Bar	200068754
3	36.509 lbmass	109.528 lbmass	100007735	Door Component Steel Channel	200068752
4	1.395 lbmass	2.791 lbmass	100007735	Door Component Steel Side Bar	200074044
5	1.547 lbmass	3.095 lbmass	100007735	Door Component Steel Lap Bar	200074061
6	1	2	100007916	CLIP PICK HOLE 304SS	100007916
7	1	4	100007728	NUT SELF-CLINCH 1/2-13 S-0813-1 RAW	100007728
8	1	2	100007697	LIFT COVER STL	100007697
9	1	1	100007647	LIFTING BRACKET STEEL LEAF	100007647
10	1.638 lbmass	3.276 lbmass	100007735	PG&E NAME PLATE BACKING PLATE	100021175
11	1	4	100007675	CAM BASE	100007675

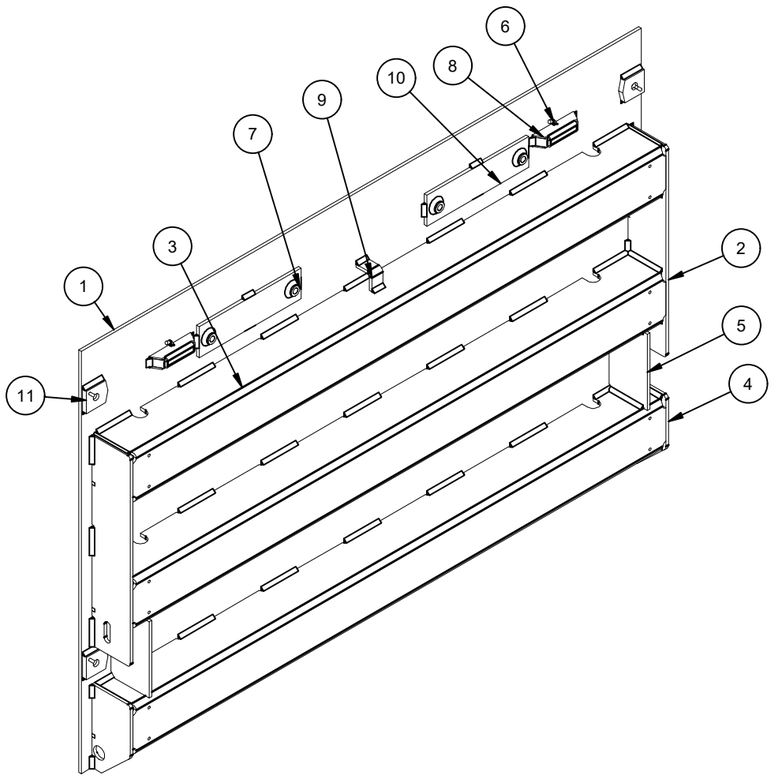

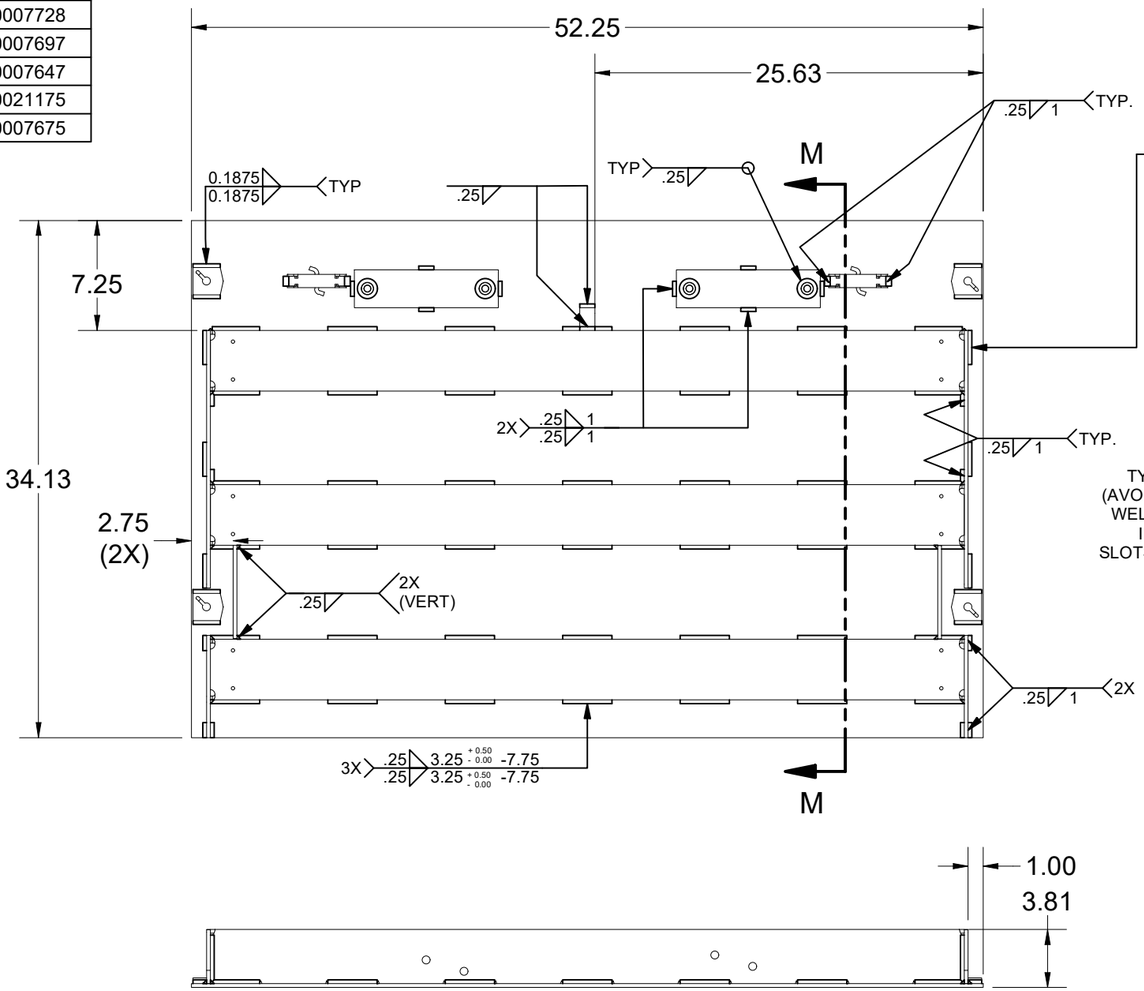

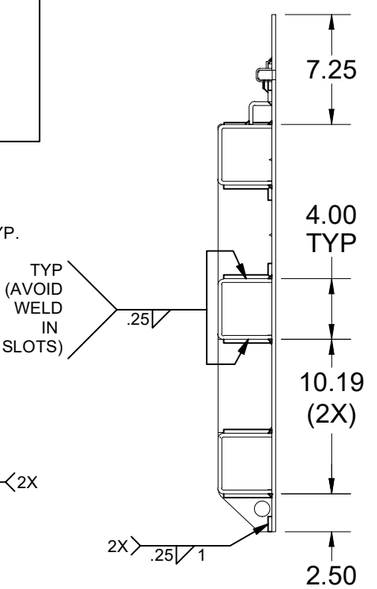

SECTION M-M

100002422.idw

MATERIAL FINISH: Galvanized	Infrastructure JENSEN 527 Dunn Circle, Sparks, NV 89431 775-352-2716 FAX: 755-358-8127 *JENSENMETALTECH.COM*	©2026 Jensen Infrastructure - All rights reserved. All materials appearing as Jensen Infrastructure documents and the like are proprietary work product and are protected under U.S. copyright and other laws. Unless in conjunction with business conducted with Jensen Infrastructure , any use of Jensen Infrastructure work product without express, written consent is prohibited, and recipient is prohibited from distributing any and all work product to non-approved third parties under penalty of civil action. This product shall only be produced in a Jensen Infrastructure facility.	PART NUMBER & DESCRIPTION: 200068751 DAS2-T-4878-H-TRX-G-PG&E-SPLICE FVT	REV: E-1-2
MATERIAL SURFACE: TraxPlate™			WEIGHT: 254.64 Lbs CREATED: 9/23/2022	DRAWN BY: R. Dohr MODIFIED: 2/3/2026	SHEET: 5

BILL OF MATERIALS

ITEM	UNIT QTY	QTY	PART NUMBER	DESCRIPTION	PART NAME
1	51.508 lbmass	51.508 lbmass	100007735	Door Component Steel Plate, Top	200068749
2	1	2	200018206	PICK HOLE ANGLE	200018206
3	1	4	100007675	CAM BASE	100007675
4	10.114 lbmass	20.227 lbmass	100007735	Door Component Steel Side Bar	200068748
5	1.280 lbmass	11.523 lbmass	100007735	Door Component Steel Lap Bar	200068750

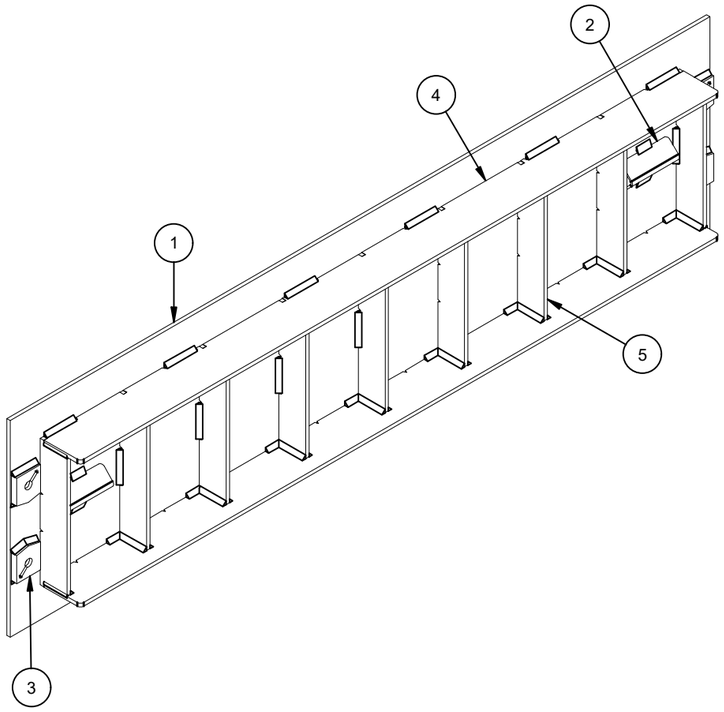

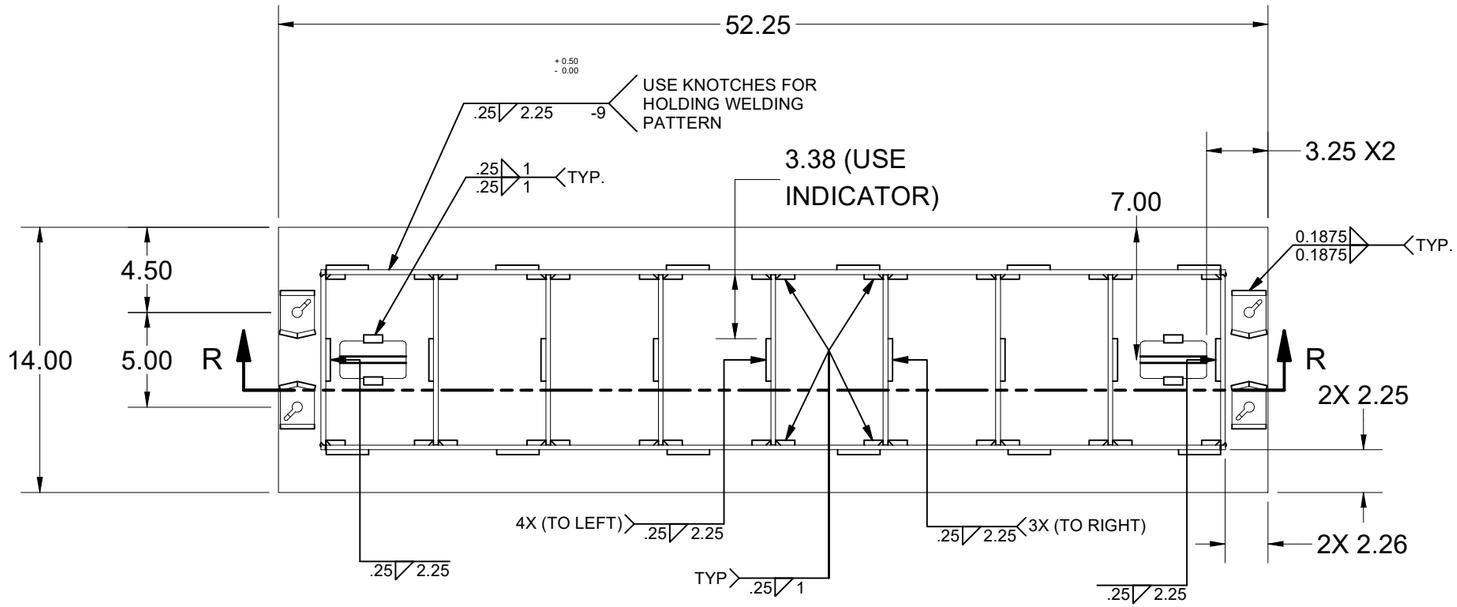

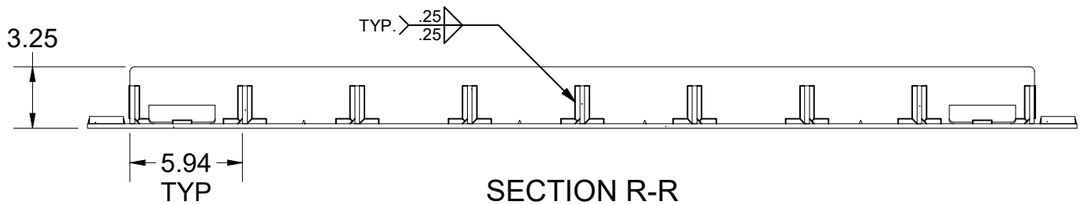

SECTION R-R
SCALE 1 / 8

MATERIAL FINISH: Galvanized	Infrastructure JENSEN 527 Dunn Circle, Sparks, NV 89431 775-352-2716 FAX: 755-358-8127 *JENSENMETALTECH.COM*	©2026 Jensen Infrastructure - All rights reserved. All materials appearing as Jensen Infrastructure documents and the like are proprietary work product and are protected under U.S. copyright and other laws. Unless in conjunction with business conducted with Jensen Infrastructure , any use of Jensen Infrastructure work product without express, written consent is prohibited, and recipient is prohibited from distributing any and all work product to non-approved third parties under penalty of civil action. This product shall only be produced in a Jensen Infrastructure facility.	PART NUMBER & DESCRIPTION: 200068747 DAS1-T-4878-D-TRX-G-PG&E-SPLICE FVT	REV: E-1-2
MATERIAL SURFACE: TraxPlate™			WEIGHT: 86.37 Lbs CREATED: 9/23/2022	DRAWN BY: R. Dohr MODIFIED: 2/3/2026	SHEET: 6

100002422.idw

BILL OF MATERIALS

ITEM	ITEM QTY	QTY	PART NUMBER	DESCRIPTION	PART NAME
1	1	51.250 in	200068766	STRUCTURAL STEEL RECTANGULAR TUBE - 6 x 4 x 3/8	200068766
2	2	12.000 in	100005205	STRUCTURAL ANGLE UNEQUAL - A36 STEEL - L 3 x 2 x 3/8	100005205
3	2	88.500 in	100005184	STRUCTURAL ANGLE EQUAL - A36 STEEL - L 1.5 x 1.5 x 1/4	100005184

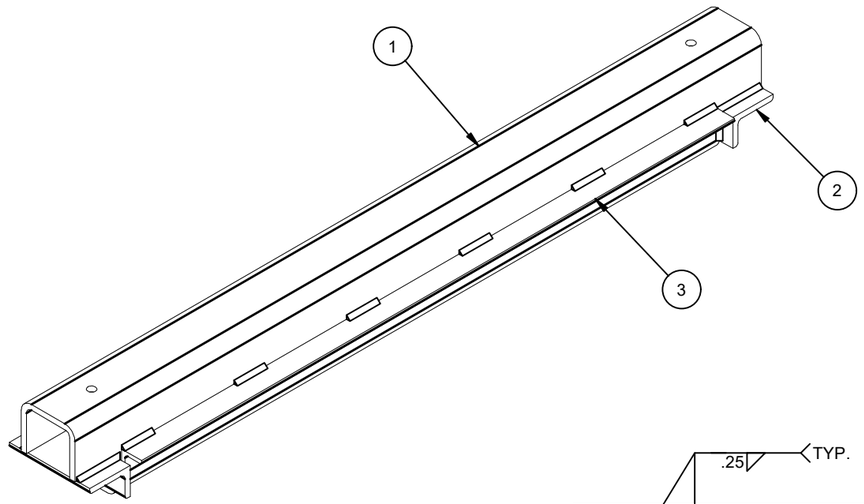

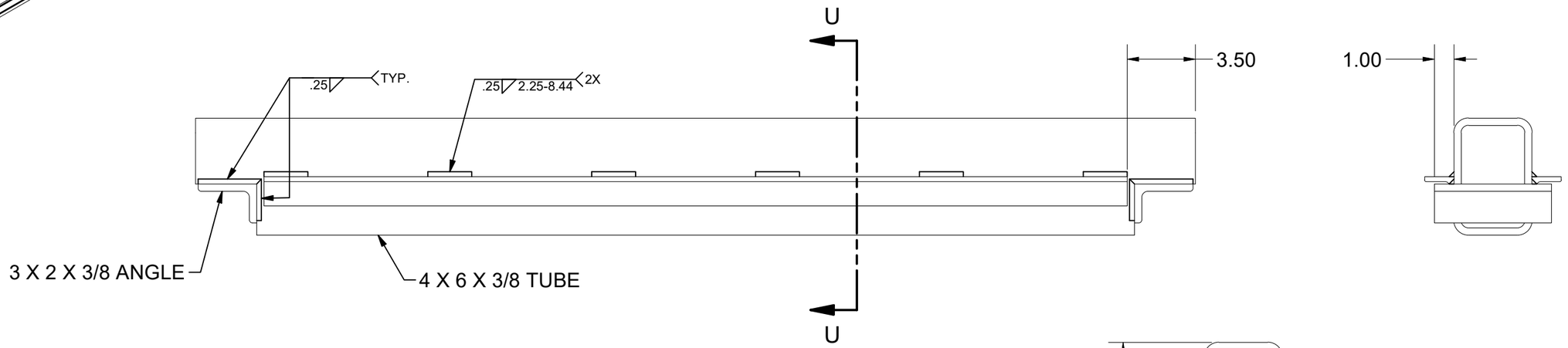

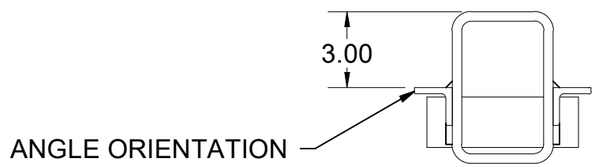

SECTION U-U
SCALE 1/6

100002422.idw

MATERIAL FINISH: Galvanized	Infrastructure JENSEN 527 Dunn Circle, Sparks, NV 89431 775-352-2716 FAX: 755-358-8127 *JENSENMETALTECH.COM*	©2026 Jensen Infrastructure - All rights reserved. All materials appearing as Jensen Infrastructure documents and the like are proprietary work product and are protected under U.S. copyright and other laws. Unless in conjunction with business conducted with Jensen Infrastructure , any use of Jensen Infrastructure work product without express, written consent is prohibited, and recipient is prohibited from distributing any and all work product to non-approved third parties under penalty of civil action. This product shall only be produced in a Jensen Infrastructure facility.	PART NUMBER & DESCRIPTION: 200076143 Support Beam 57.25in W Beam right & left 4878 FVT REV: E-1-2
MATERIAL SURFACE: Smooth			WEIGHT: 113.9 Lbs DRAWN BY: R. Dohr CREATED: 9/23/2022 MODIFIED: 2/3/2026 SHEET: 7

BURN LIST - BOM

PART NAME	PART NUMBER	ITEM QTY	DESCRIPTION	STOCK NUMBER	MATERIAL	MASS	SHEET
200068748	100007735	2	Door Component Steel Side Bar	100007735	STL ASTM A36 SM-HRPO RAW .250	10.114 lbmass	10
200068749	100007735	1	Door Component Steel Plate, Top	100007735	STL ASTM A36 SM-HRPO RAW .250	51.508 lbmass	11
200068750	100007735	9	Door Component Steel Lap Bar	100007735	STL ASTM A36 SM-HRPO RAW .250	1.280 lbmass	12
200068752	100007735	6	Door Component Steel Channel	100007735	STL ASTM A36 SM-HRPO RAW .250	36.509 lbmass	13
200068753	100007735	1	Door Component Steel Plate, Top Nameplate	100007735	STL ASTM A36 SM-HRPO RAW .250	123.664 lbmass	14
200068754	100007735	4	Door Component Steel Side Bar	100007735	STL ASTM A36 SM-HRPO RAW .250	4.220 lbmass	15
200074061	100007735	4	Door Component Steel Lap Bar	100007735	STL ASTM A36 SM-HRPO RAW .250	1.547 lbmass	16
200074044	100007735	4	Door Component Steel Side Bar	100007735	STL ASTM A36 SM-HRPO RAW .250	1.395 lbmass	17
200068756	100007735	1	Door Component Steel Plate, Bottom Nameplate	100007735	STL ASTM A36 SM-HRPO RAW .250	123.330 lbmass	18
200068759	100007734	4	Frame Component Steel	100007734	STL ASTM A36 SM-HRPO 60X120 RAW .1875	0.550 lbmass	19
200068760	100007734	2	Frame Component Steel Frame End, Adjustable	100007734	STL ASTM A36 SM-HRPO 60X120 RAW .1875	38.226 lbmass	20
200068761	100007734	2	Frame Component Steel Frame Side, Adjustable	100007734	STL ASTM A36 SM-HRPO 60X120 RAW .1875	44.958 lbmass	21
200069890	200069890	2	Frame Component - Leveling Bar	100007735	STL ASTM A36 SM-HRPO RAW .250	16.974 lbmass	23
200069159	100007734	12	SQUARE NUT BRACKET-CUSTOM PG&E FVT	100007734	STL ASTM A36 SM-HRPO 60X120 RAW .1875	0.450 lbmass	24
200069158	100007734	12	STANDOFF SIDEWALL	100007734	STL ASTM A36 SM-HRPO 60X120 RAW .1875	0.313 lbmass	25

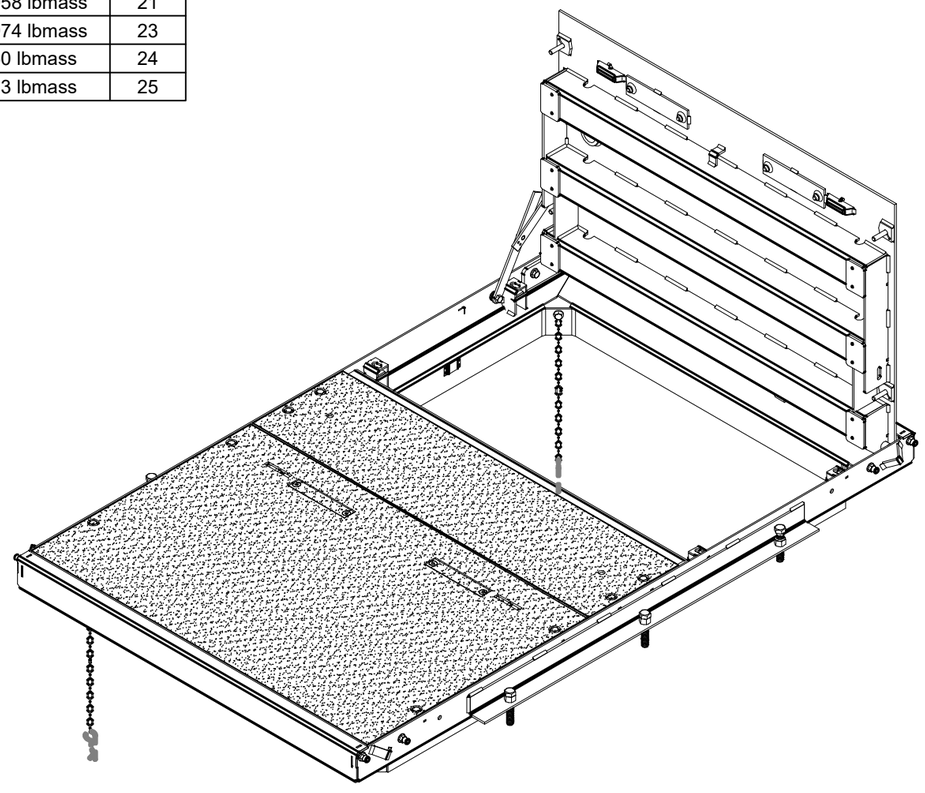

100002422.idw

MATERIAL FINISH: Galvanized

MATERIAL SURFACE: TraxPlate™

Infrastructure JENSEN
527 Dunn Circle, Sparks, NV 89431
775-352-2716 FAX: 755-358-8127
JENSENMETALTECH.COM

©2026 Jensen Infrastructure - All rights reserved.
All materials appearing as Jensen Infrastructure documents and the like are proprietary work product and are protected under U.S. copyright and other laws. Unless in conjunction with business conducted with Jensen Infrastructure , any use of Jensen Infrastructure work product without express, written consent is prohibited, and recipient is prohibited from distributing any and all work product to non-approved third parties under penalty of civil action.
This product shall only be produced in a Jensen Infrastructure facility.

PART NUMBER & DESCRIPTION: 100002422 CAS2-4878-AH-TRX-G-SG-GR-PG&E-OH08-SPLICE FVT

REV: E-1-2

WEIGHT: 1078.77 Lbs

DRAWN BY: R. Dohr

SHEET: 8

CREATED: 9/23/2022

MODIFIED: 2/3/2026

CUT LIST - BOM

PART NAME	PART NUMBER	ITEM QTY	BASE QTY	QTY	DESCRIPTION	Material IFS #	MATERIAL IFS DESCRIPTION	MASS	SHEET
100005205	100005205	4	6.000 in	24.000 in	STRUCTURAL ANGLE UNEQUAL - A36 STEEL - L 3 x 2 x 3/8	100005205	STRUCTURAL ANGLE UNEQUAL - A36 STEEL - L 3 x 2 x 3/8	2.968 lbmass	
100005184	100005184	4	44.25 in	177.000 in	STRUCTURAL ANGLE EQUAL - A36 STEEL - L 1.5 x 1.5 x 1/4	100005184	STRUCTURAL ANGLE EQUAL - A36 STEEL - L 1.5 x 1.5 x 1/4	8.681 lbmass	
200068766	200068766	2	51.250 in	102.500 in	STRUCTURAL STEEL RECTANGULAR TUBE - 6 x 4 x 3/8	100005167	STRUCTURAL STEEL RECTANGULAR TUBE - 6 x 4 x 3/8	90.188 lbmass	22

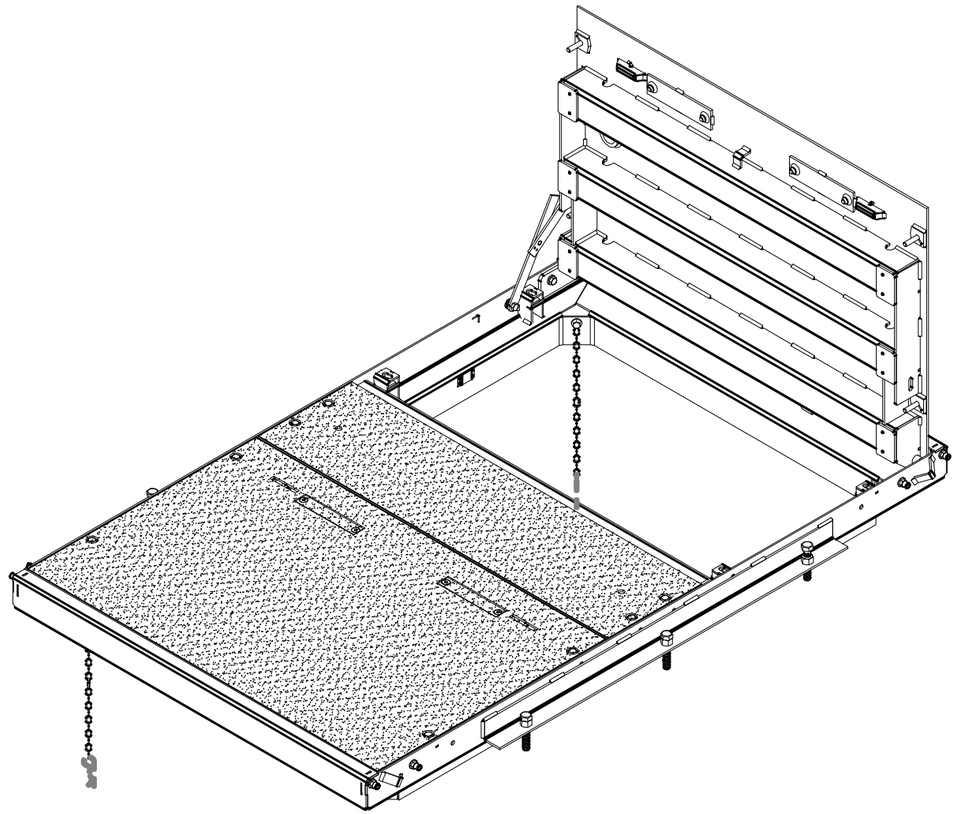

100002422.idw

MATERIAL FINISH:
Galvanized

MATERIAL SURFACE:
TraxPlate™

Infrastructure
JENSEN
527 Dunn Circle, Sparks, NV 89431
775-352-2716 FAX: 755-358-8127
JENSENMETALTECH.COM

©2026 Jensen Infrastructure - All rights reserved.
All materials appearing as Jensen Infrastructure documents and the like are proprietary work product and are protected under U.S. copyright and other laws. Unless in conjunction with business conducted with Jensen Infrastructure , any use of Jensen Infrastructure work product without express, written consent is prohibited, and recipient is prohibited from distributing any and all work product to non-approved third parties under penalty of civil action.
This product shall only be produced in a Jensen Infrastructure facility.

PART NUMBER & DESCRIPTION: 100002422
CAS2-4878-AH-TRX-G-SG-GR-PG&E-OH08-SPLICE FVT

REV: E-1-2

WEIGHT: 1078.77 Lbs

DRAWN BY: R. Dohr

SHEET: 9

CREATED: 9/23/2022

MODIFIED: 2/3/2026

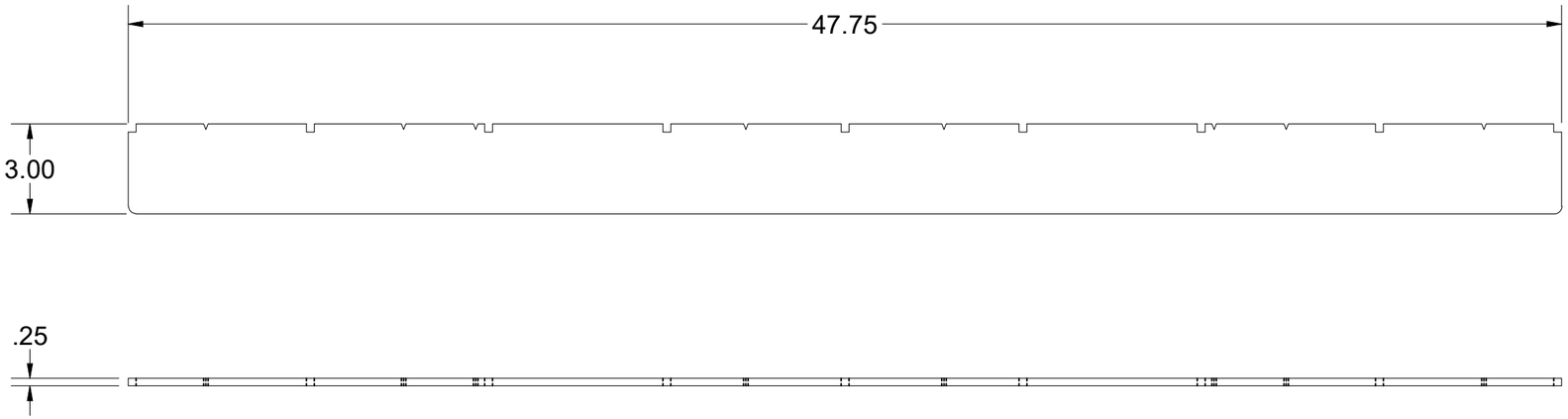

BEND TABLE				MATERIAL IFS: 100007735
BEND RADIUS	V-OPENING	BEND ANGLE	BEND DEDUCTION	MATERIAL THK: 0.25
-	-	-	-	MAT DESCRIPTION: STL ASTM A36 SM-HRPO RAW .250

Infrastructure
JENSEN
527 Dunn Circle, Sparks, NV 89431
775-352-2716 FAX: 755-358-8127
JENSENMETALTECH.COM

©2026 Jensen Infrastructure - All rights reserved.
All materials appearing as Jensen Infrastructure documents and the like are proprietary work product and are protected under U.S. copyright and other laws. Unless in conjunction with business conducted with Jensen Infrastructure , any use of Jensen Infrastructure work product without express, written consent is prohibited, and recipient is prohibited from distributing any and all work product to non-approved third parties under penalty of civil action.
This product shall only be produced in a Jensen Infrastructure facility.

NAME & DESCRIPTION:	200068748 Door Component Steel Side Bar	REV:	E-1-2
WEIGHT:	10.114 lbmass	DRAWN BY:	R. Dohr
CREATED:	9/23/2022	MODIFIED:	2/3/2026
		SHEET:	10 OF 25

100002422.idw

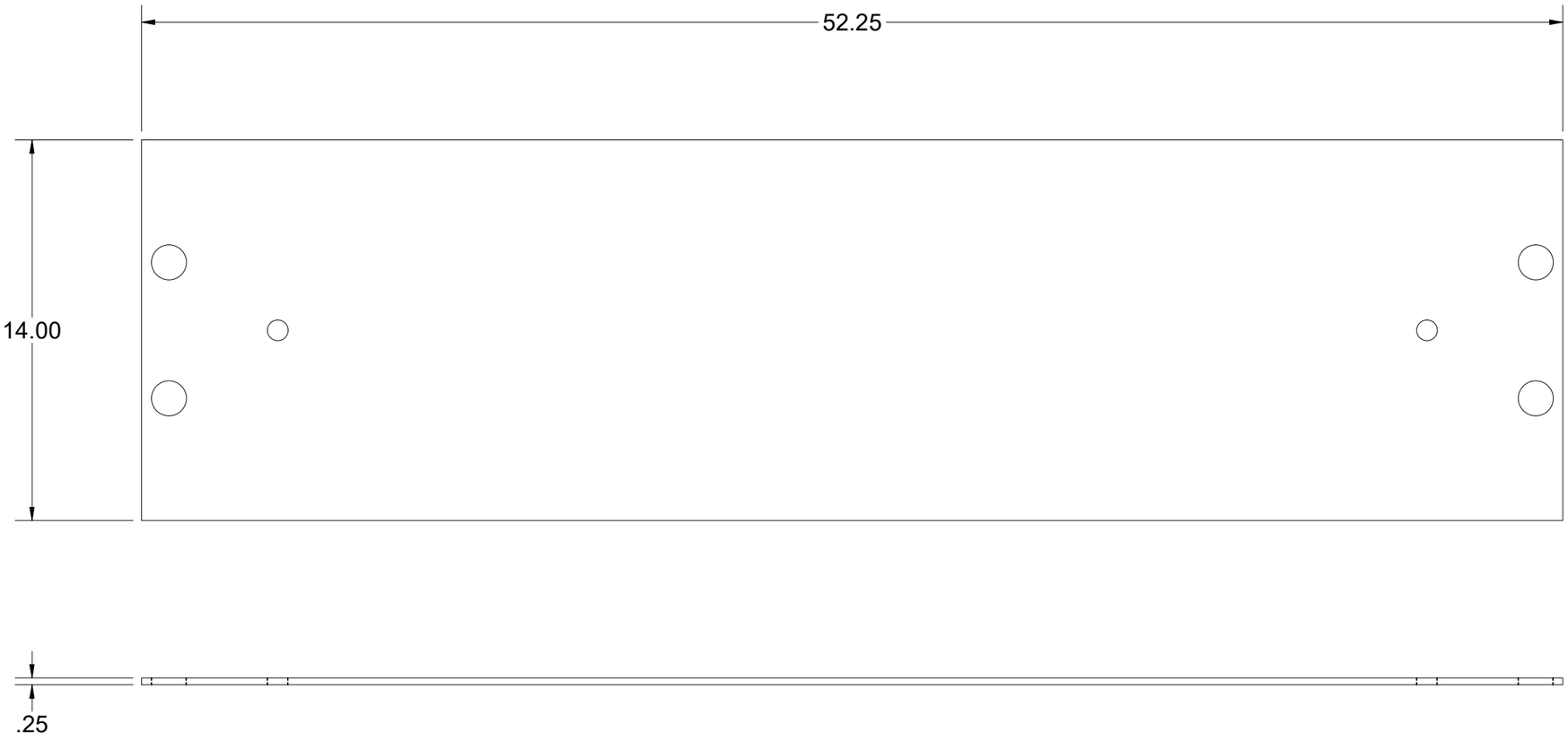

BEND TABLE				MATERIAL IFS: 100007735
BEND RADIUS	V-OPENING	BEND ANGLE	BEND DEDUCTION	MATERIAL THK: 0.25
-	-	-	-	MAT DESCRIPTION: STL ASTM A36 SM-HRPO RAW .250

Infrastructure
JENSEN
527 Dunn Circle, Sparks, NV 89431
775-352-2716 FAX: 755-358-8127
JENSENMETALTECH.COM

©2026 Jensen Infrastructure - All rights reserved.
All materials appearing as Jensen Infrastructure documents and the like are proprietary work product and are protected under U.S. copyright and other laws. Unless in conjunction with business conducted with Jensen Infrastructure , any use of Jensen Infrastructure work product without express, written consent is prohibited, and recipient is prohibited from distributing any and all work product to non-approved third parties under penalty of civil action.
This product shall only be produced in a Jensen Infrastructure facility.

NAME & DESCRIPTION: 200068749 Door Component Steel Plate, Top		REV: E-1-2
WEIGHT: 51.508 lbmass	DRAWN BY: R. Dohr	SHEET: 11 OF 25
CREATED: 9/23/2022	MODIFIED: 2/3/2026	

100002422.idw

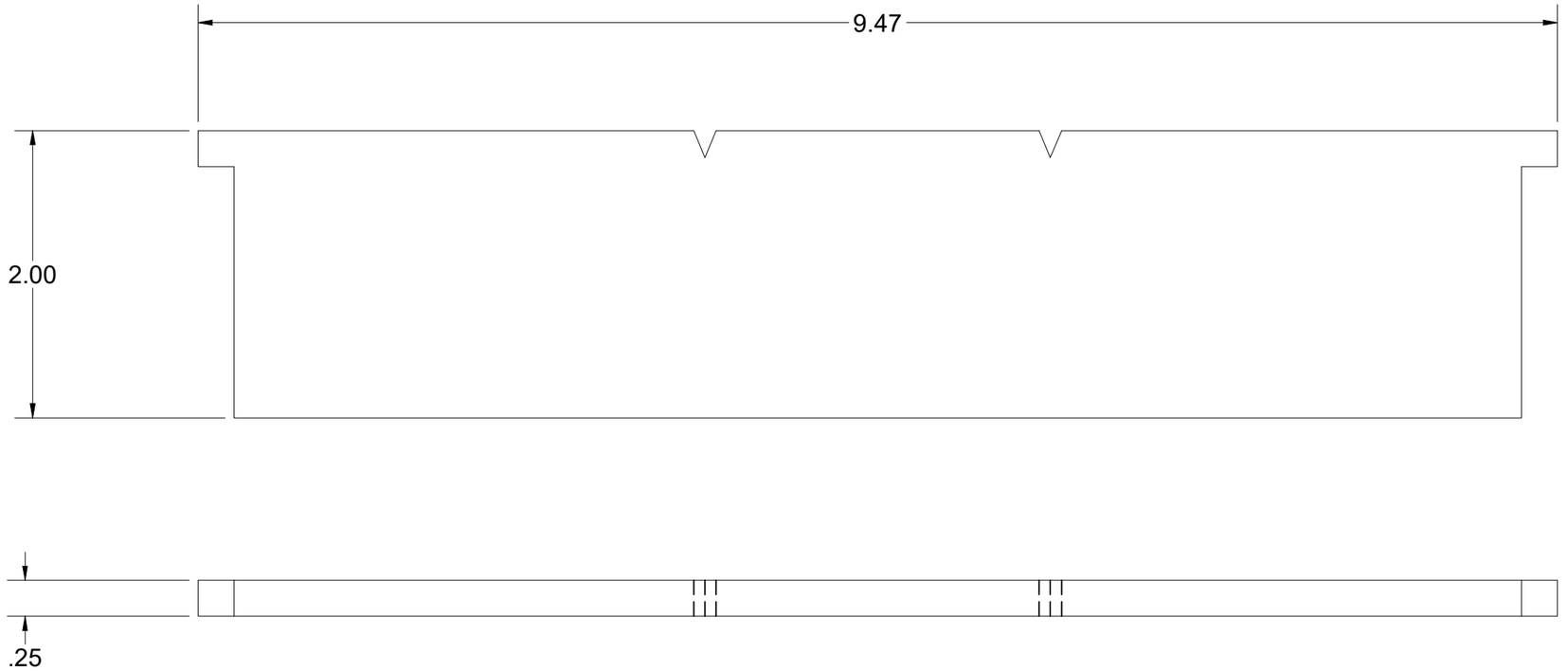

BEND TABLE				MATERIAL IFS: 100007735
BEND RADIUS	V-OPENING	BEND ANGLE	BEND DEDUCTION	MATERIAL THK: 0.25
-	-	-	-	MAT DESCRIPTION: STL ASTM A36 SM-HRPO RAW .250

Infrastructure
JENSEN
527 Dunn Circle, Sparks, NV 89431
775-352-2716 FAX: 755-358-8127
JENSENMETALTECH.COM

©2026 Jensen Infrastructure - All rights reserved.
All materials appearing as Jensen Infrastructure documents and the like are proprietary work product and are protected under U.S. copyright and other laws. Unless in conjunction with business conducted with Jensen Infrastructure , any use of Jensen Infrastructure work product without express, written consent is prohibited, and recipient is prohibited from distributing any and all work product to non-approved third parties under penalty of civil action.
This product shall only be produced in a Jensen Infrastructure facility.

NAME & DESCRIPTION: 200068750 Door Component Steel Lap Bar		REV: E-1-2
WEIGHT: 1.280 lbmass	DRAWN BY: R. Dohr	SHEET: 12 OF 25
CREATED: 9/23/2022	MODIFIED: 2/3/2026	

100002422.idw

ASYMMETRIC

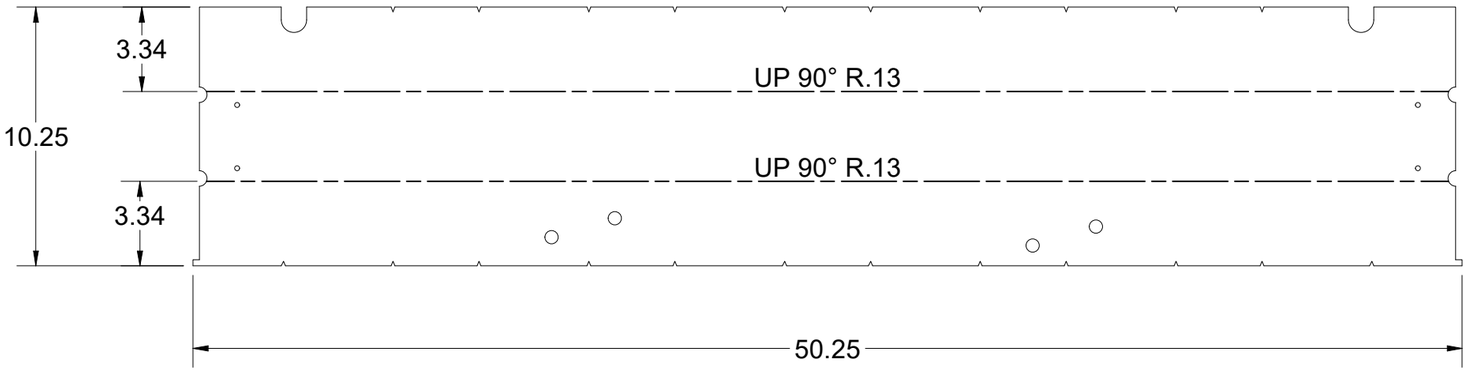

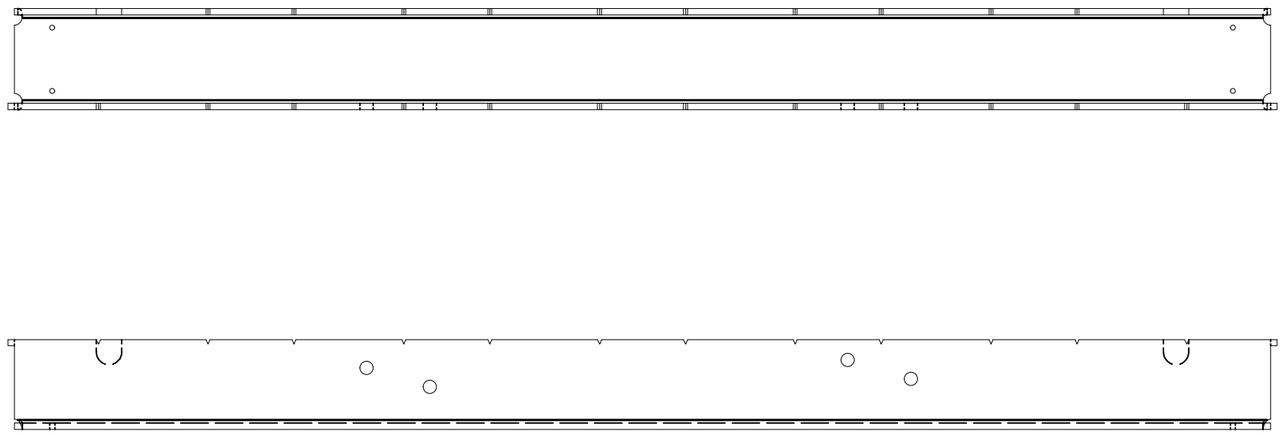

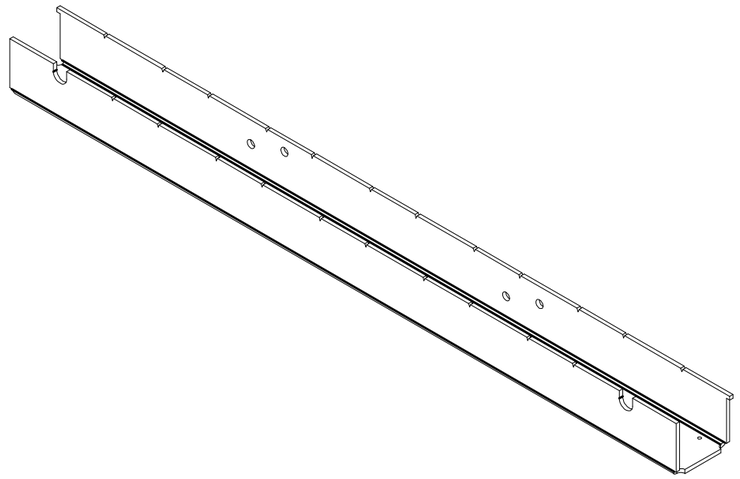

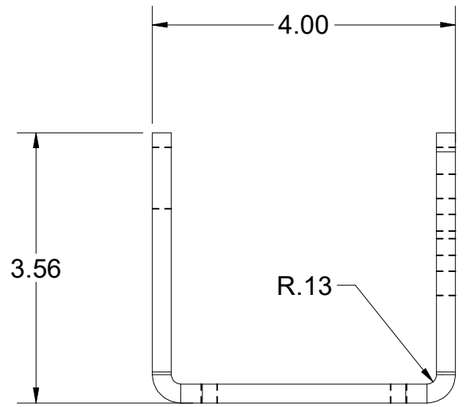

BEND TABLE			
BEND RADIUS	V-OPENING	BEND ANGLE	BEND DEDUCTION
0.125	2	90	0.44

MATERIAL IFS: 100007735

MATERIAL THK: 0.25

MAT DESCRIPTION: STL ASTM A36 SM-HRPO RAW .250

Infrastructure JENSEN
527 Dunn Circle, Sparks, NV 89431
775-352-2716 FAX: 755-358-8127
JENSENMETALTECH.COM

©2026 Jensen Infrastructure - All rights reserved.
All materials appearing as Jensen Infrastructure documents and the like are proprietary work product and are protected under U.S. copyright and other laws. Unless in conjunction with business conducted with Jensen Infrastructure , any use of Jensen Infrastructure work product without express, written consent is prohibited, and recipient is prohibited from distributing any and all work product to non-approved third parties under penalty of civil action.
This product shall only be produced in a Jensen Infrastructure facility.

NAME & DESCRIPTION: 200068752 Door Component Steel Channel

REV: E-1-2

WEIGHT: 36.509 lbmass

DRAWN BY: R. Dohr

CREATED: 9/23/2022

MODIFIED: 2/3/2026

SHEET: 13 OF 25

100002422.idw

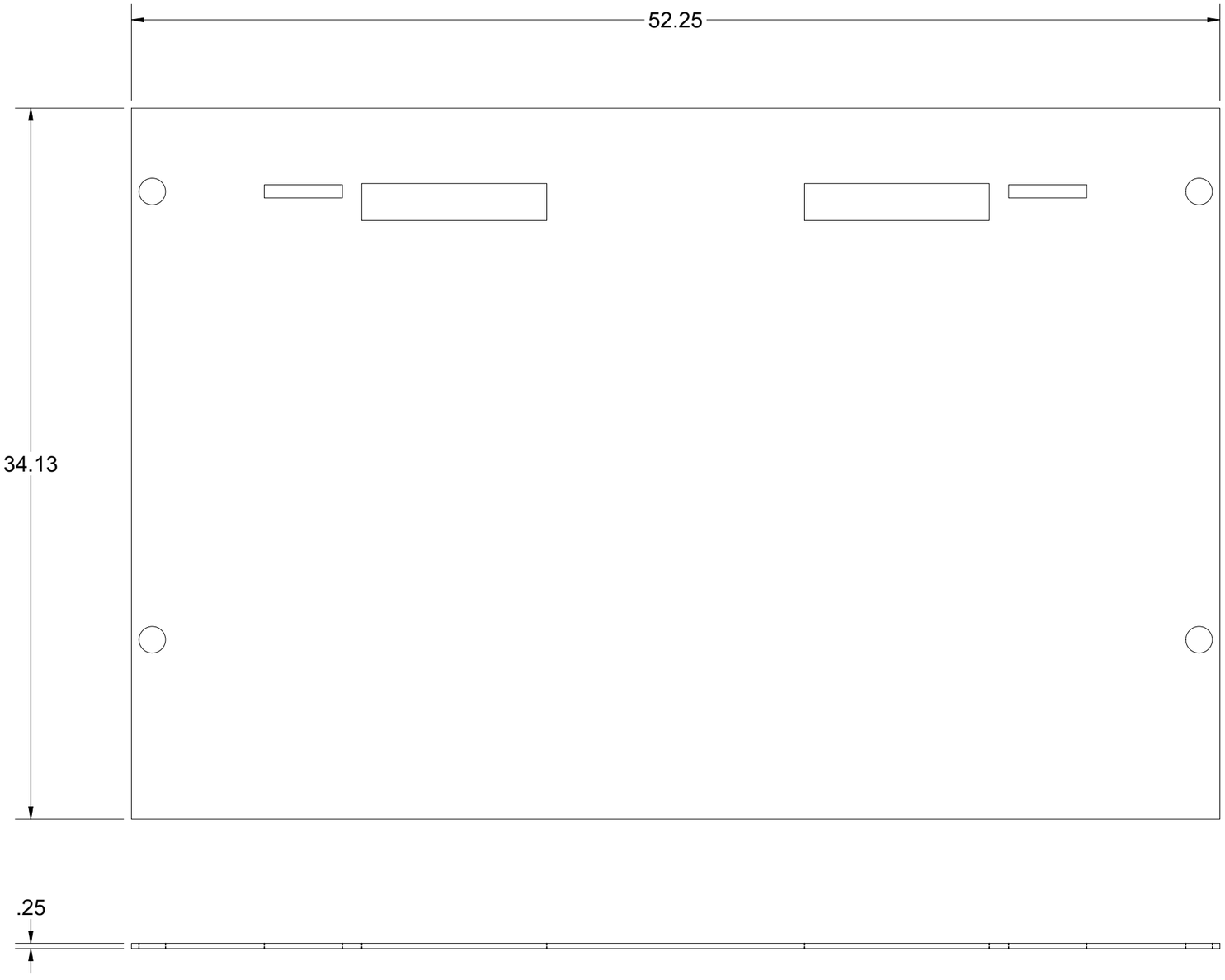

BEND TABLE			
BEND RADIUS	V-OPENING	BEND ANGLE	BEND DEDUCTION
-	-	-	-

MATERIAL IFS: 100007735

MATERIAL THK: 0.25

MAT DESCRIPTION: STL ASTM A36 SM-HRPO RAW .250

Infrastructure
JENSEN
527 Dunn Circle, Sparks, NV 89431
775-352-2716 FAX: 755-358-8127
JENSENMETALTECH.COM

©2026 Jensen Infrastructure - All rights reserved.
All materials appearing as Jensen Infrastructure documents and the like are proprietary work product and are protected under U.S. copyright and other laws.
Unless in conjunction with business conducted with Jensen Infrastructure , any use of Jensen Infrastructure work product without express, written consent is prohibited, and recipient is prohibited from distributing any and all work product to non-approved third parties under penalty of civil action.
This product shall only be produced in a Jensen Infrastructure facility.

NAME & DESCRIPTION: 200068753
Door Component Steel Plate, Top Nameplate

REV: E-1-2

WEIGHT: 123.664 lbmass

DRAWN BY: R. Dohr

CREATED: 9/23/2022

MODIFIED: 2/3/2026

SHEET: 14 OF 25

100002422.idw

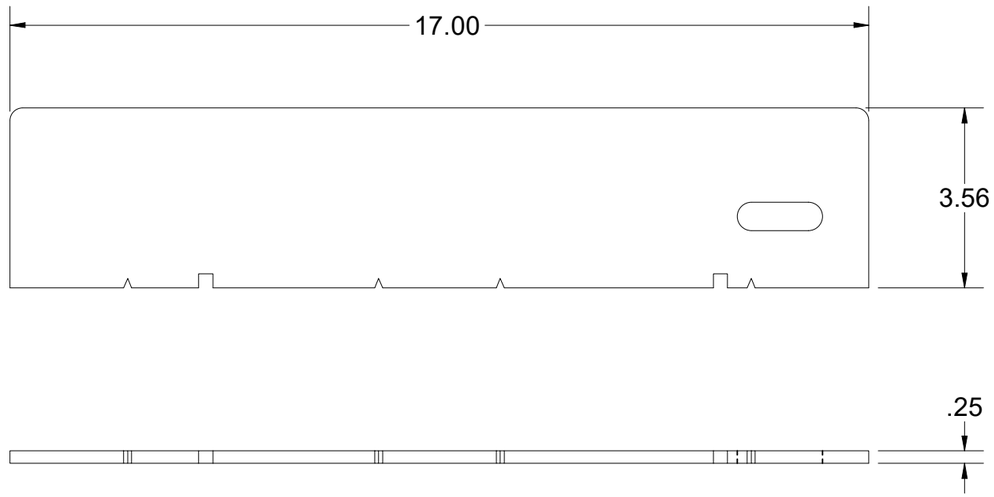

BEND TABLE				MATERIAL IFS: 100007735
BEND RADIUS	V-OPENING	BEND ANGLE	BEND DEDUCTION	MATERIAL THK: 0.25
-	-	-	-	MAT DESCRIPTION: STL ASTM A36 SM-HRPO RAW .250

Infrastructure
JENSEN
527 Dunn Circle, Sparks, NV 89431
775-352-2716 FAX: 755-358-8127
JENSENMETALTECH.COM

©2026 Jensen Infrastructure - All rights reserved.
All materials appearing as Jensen Infrastructure documents and the like are proprietary work product and are protected under U.S. copyright and other laws. Unless in conjunction with business conducted with Jensen Infrastructure , any use of Jensen Infrastructure work product without express, written consent is prohibited, and recipient is prohibited from distributing any and all work product to non-approved third parties under penalty of civil action.
This product shall only be produced in a Jensen Infrastructure facility.

NAME & DESCRIPTION:	200068754 Door Component Steel Side Bar	REV:
WEIGHT: 4.220 lbmass	DRAWN BY: R. Dohr	SHEET: 15 OF 25
CREATED: 9/23/2022	MODIFIED: 2/3/2026	

100002422.idw

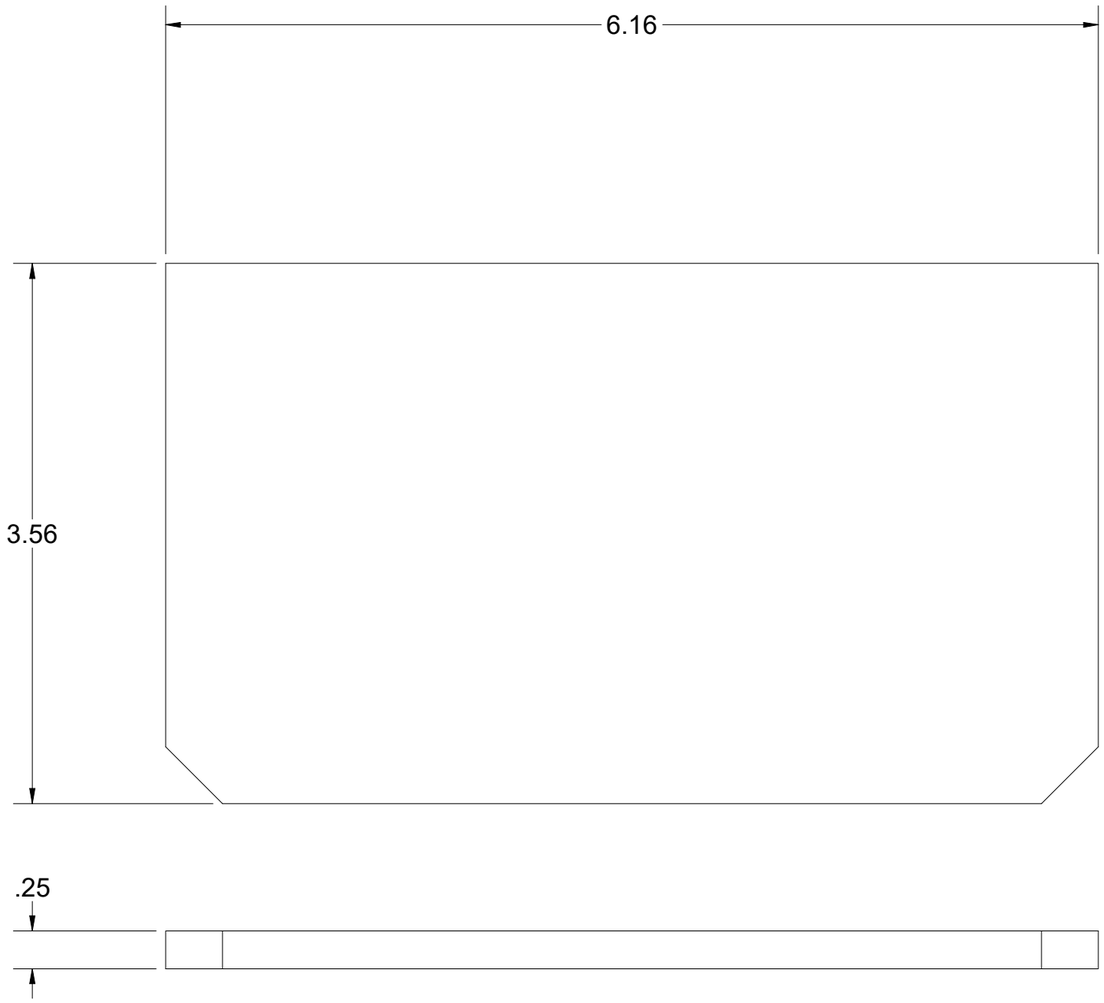

BEND TABLE				MATERIAL IFS: 100007735			
BEND RADIUS	V-OPENING	BEND ANGLE	BEND DEDUCTION	MATERIAL THK: 0.25			
-	-	-	-	MAT DESCRIPTION: STL ASTM A36 SM-HRPO RAW .250			

Infrastructure
JENSEN
527 Dunn Circle, Sparks, NV 89431
775-352-2716 FAX: 755-358-8127
JENSENMETALTECH.COM

©2026 Jensen Infrastructure - All rights reserved.
All materials appearing as Jensen Infrastructure documents and the like are proprietary work product and are protected under U.S. copyright and other laws. Unless in conjunction with business conducted with Jensen Infrastructure , any use of Jensen Infrastructure work product without express, written consent is prohibited, and recipient is prohibited from distributing any and all work product to non-approved third parties under penalty of civil action.
This product shall only be produced in a Jensen Infrastructure facility.

NAME & DESCRIPTION: 200074061 Door Component Steel Lap Bar		REV: E-1-2
WEIGHT: 1.547 lbmass	DRAWN BY: R. Dohr	SHEET: 16 OF 25
CREATED: 9/23/2022	MODIFIED: 2/3/2026	

100002422.idw

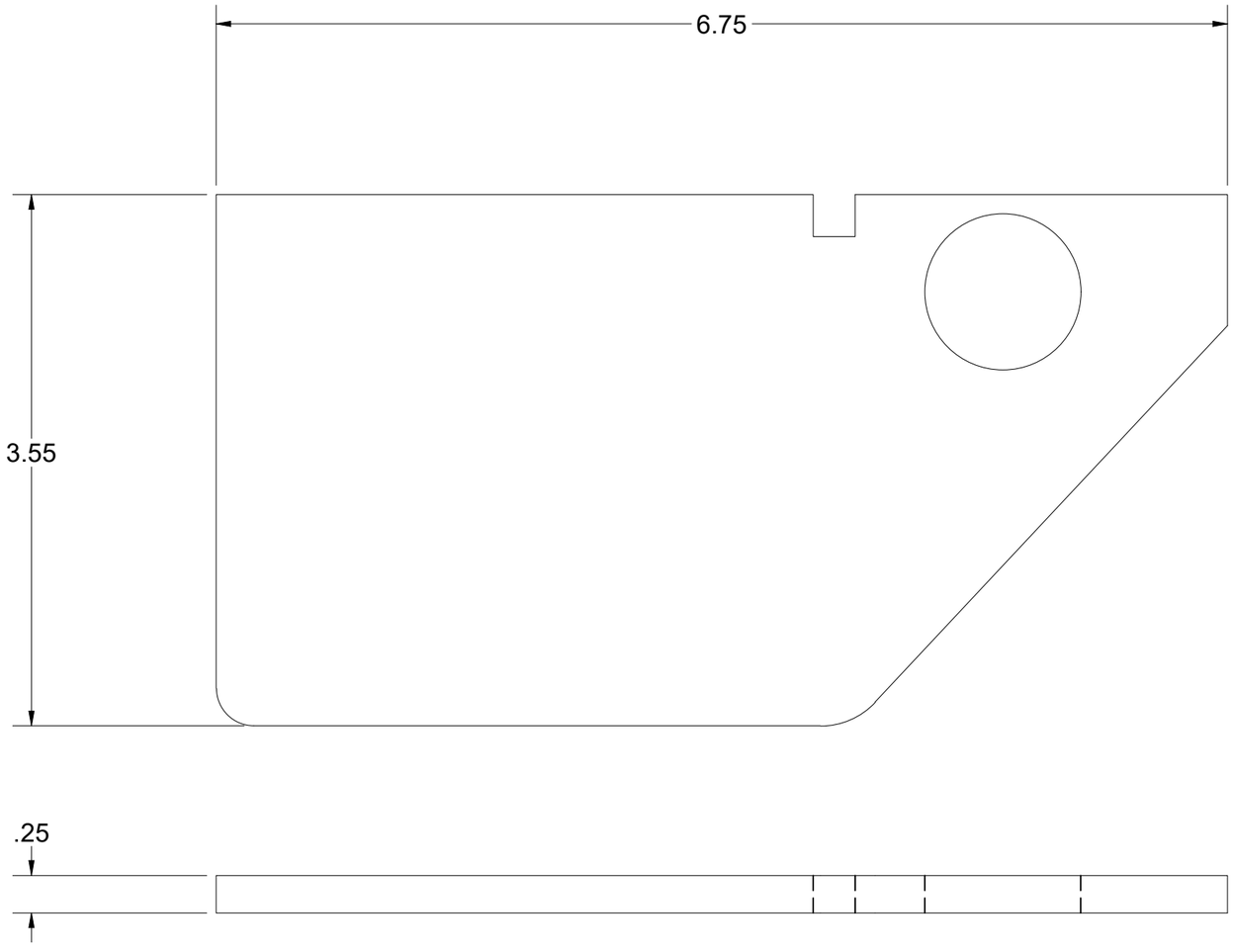

BEND TABLE				MATERIAL IFS: 100007735
BEND RADIUS	V-OPENING	BEND ANGLE	BEND DEDUCTION	MATERIAL THK: 0.25
-	-	-	-	MAT DESCRIPTION: STL ASTM A36 SM-HRPO RAW .250

Infrastructure
JENSEN
527 Dunn Circle, Sparks, NV 89431
775-352-2716 FAX: 755-358-8127
JENSENMETALTECH.COM

©2026 Jensen Infrastructure - All rights reserved.
All materials appearing as Jensen Infrastructure documents and the like are proprietary work product and are protected under U.S. copyright and other laws. Unless in conjunction with business conducted with Jensen Infrastructure , any use of Jensen Infrastructure work product without express, written consent is prohibited, and recipient is prohibited from distributing any and all work product to non-approved third parties under penalty of civil action.
This product shall only be produced in a Jensen Infrastructure facility.

NAME & DESCRIPTION:		REV:
200074044 Door Component Steel Side Bar		E-1-2
WEIGHT: 1.395 lbmass	DRAWN BY: R. Dohr	SHEET: 17 OF 25
CREATED: 9/23/2022	MODIFIED: 2/3/2026	

100002422.idw

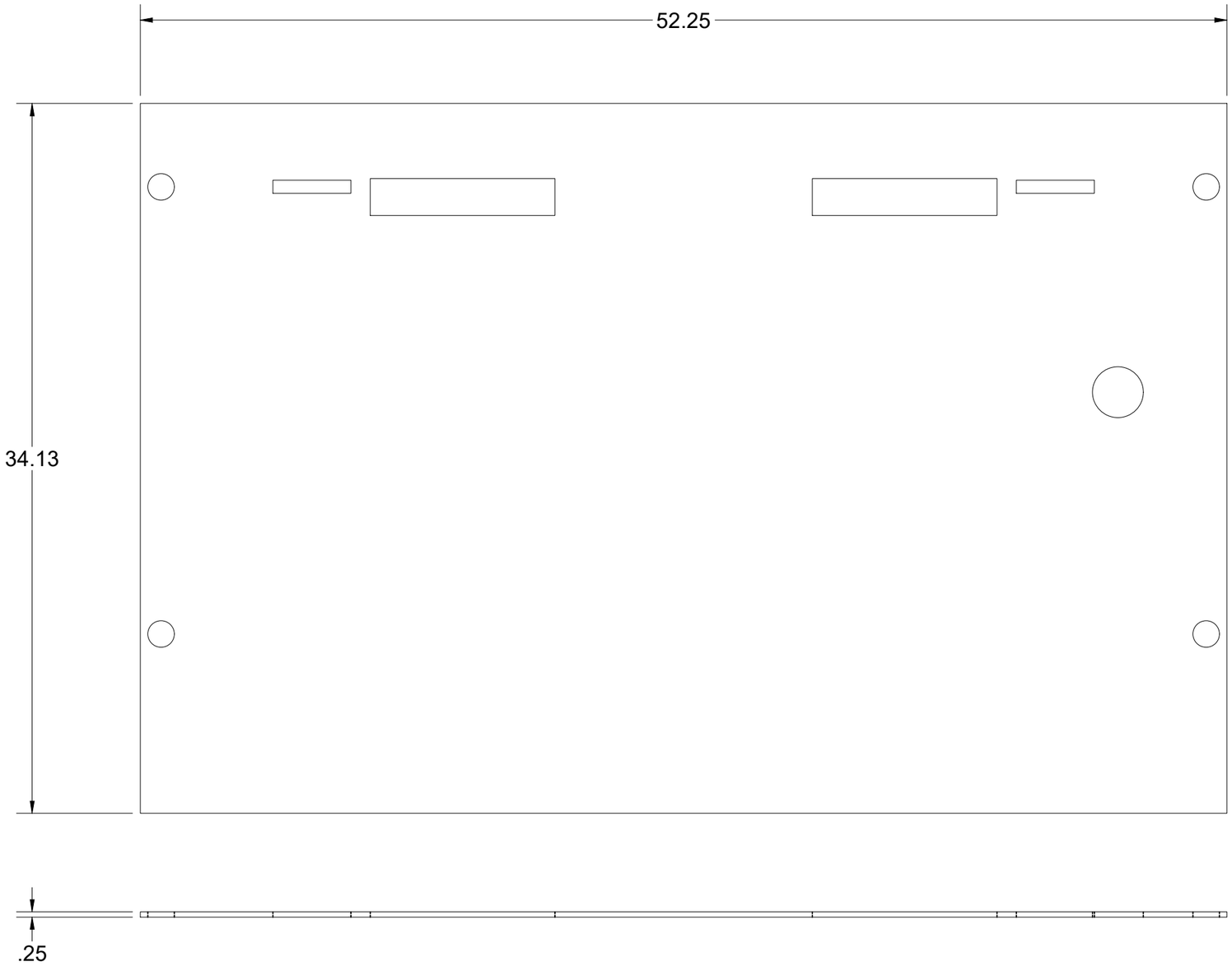

100002422.idw

BEND TABLE				MATERIAL IFS: 100007735
BEND RADIUS	V-OPENING	BEND ANGLE	BEND DEDUCTION	MATERIAL THK: 0.25
-	-	-	-	MAT DESCRIPTION: STL ASTM A36 SM-HRPO RAW .250

Infrastructure
JENSEN
527 Dunn Circle, Sparks, NV 89431
775-352-2716 FAX: 755-358-8127
JENSENMETALTECH.COM

©2026 Jensen Infrastructure - All rights reserved.
All materials appearing as Jensen Infrastructure documents and the like are proprietary work product and are protected under U.S. copyright and other laws. Unless in conjunction with business conducted with Jensen Infrastructure , any use of Jensen Infrastructure work product without express, written consent is prohibited, and recipient is prohibited from distributing any and all work product to non-approved third parties under penalty of civil action.
This product shall only be produced in a Jensen Infrastructure facility.

NAME & DESCRIPTION: 200068756 Door Component Steel Plate, Bottom Nameplate		REV: E-1-2
WEIGHT: 123.330 lbmass	DRAWN BY: R. Dohr	SHEET: 18 OF 25
CREATED: 9/23/2022	MODIFIED: 2/3/2026	

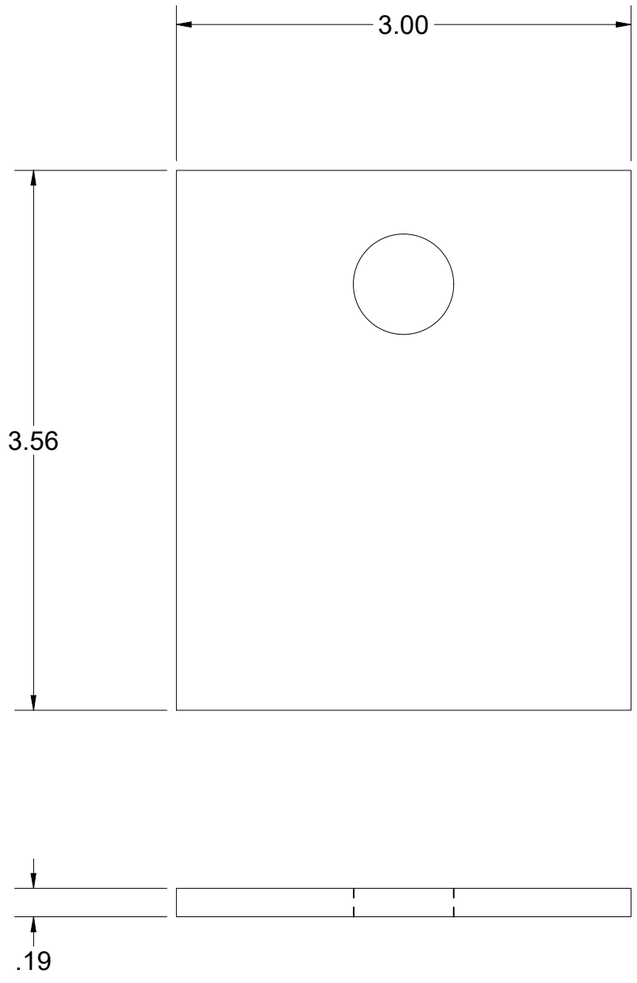

BEND TABLE				MATERIAL IFS: 100007734
BEND RADIUS	V-OPENING	BEND ANGLE	BEND DEDUCTION	MATERIAL THK: 0.1875
-	-	-	-	MAT DESCRIPTION: STL ASTM A36 SM-HRPO 60X120 RAW .1875

Infrastructure
JENSEN
527 Dunn Circle, Sparks, NV 89431
775-352-2716 FAX: 755-358-8127
JENSENMETALTECH.COM

©2026 Jensen Infrastructure - All rights reserved.
All materials appearing as Jensen Infrastructure documents and the like are proprietary work product and are protected under U.S. copyright and other laws. Unless in conjunction with business conducted with Jensen Infrastructure , any use of Jensen Infrastructure work product without express, written consent is prohibited, and recipient is prohibited from distributing any and all work product to non-approved third parties under penalty of civil action.
This product shall only be produced in a Jensen Infrastructure facility.

NAME & DESCRIPTION:	200068759 Frame Component Steel		REV:
WEIGHT:	0.550 lbmass	DRAWN BY: R. Dohr	SHEET: 19 OF 25
CREATED:	9/23/2022	MODIFIED: 2/3/2026	

100002422.idw

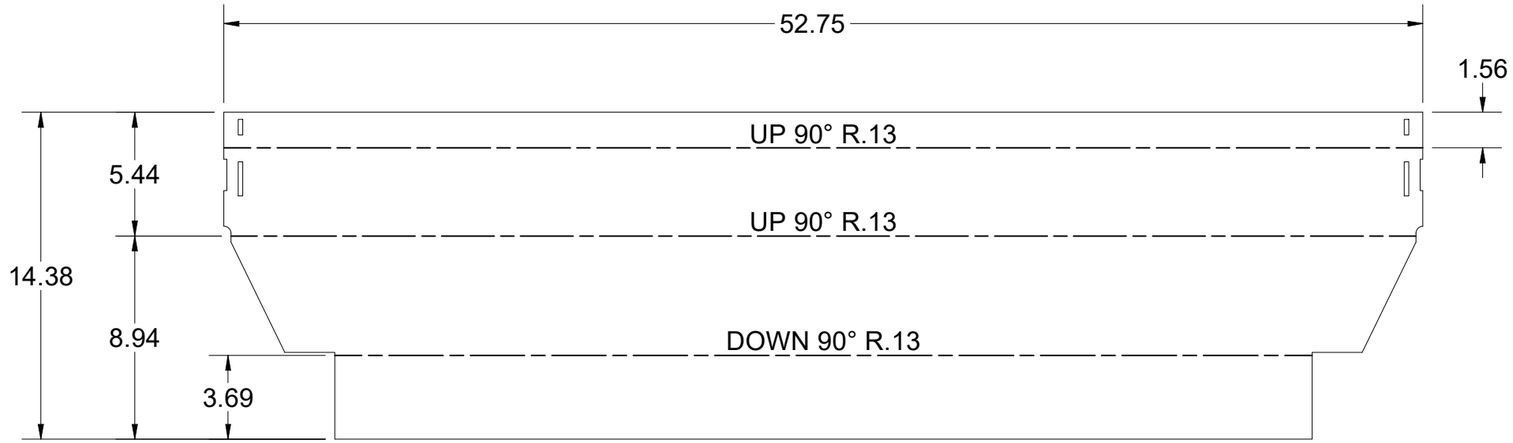

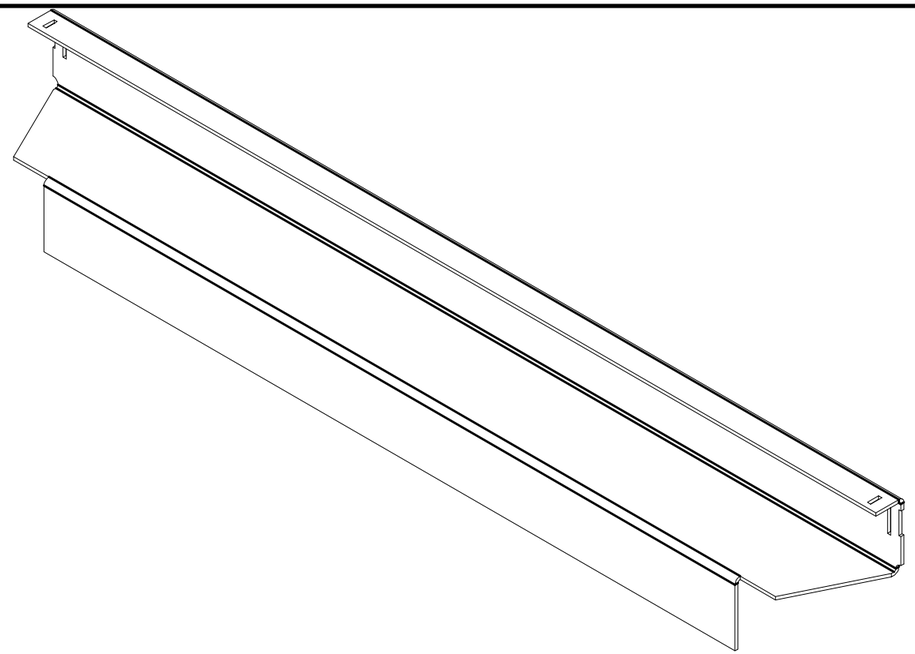



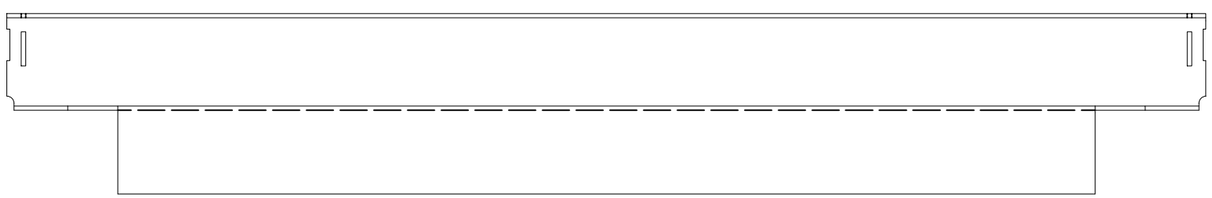

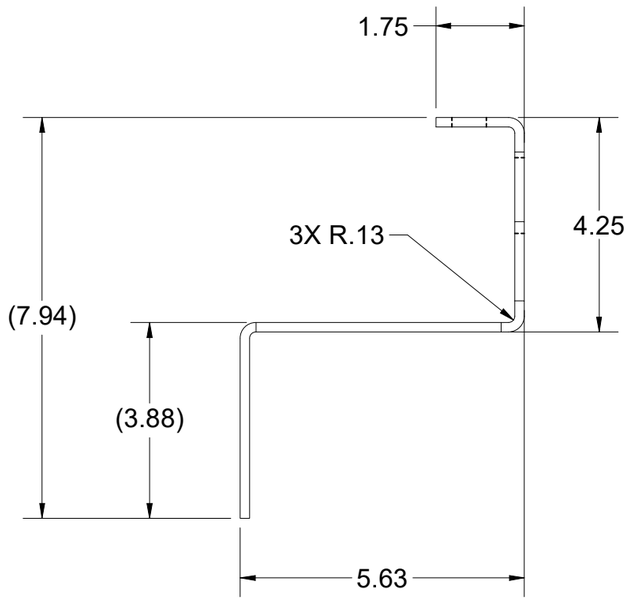

100002422.idw

BEND TABLE				MATERIAL IFS: 100007734
BEND RADIUS	V-OPENING	BEND ANGLE	BEND DEDUCTION	MATERIAL THK: 0.1875
0.125	2	90	0.3750	MAT DESCRIPTION: STL ASTM A36 SM-HRPO 60X120 RAW .1875

Infrastructure
JENSEN
527 Dunn Circle, Sparks, NV 89431
775-352-2716 FAX: 755-358-8127
JENSENMETALTECH.COM

©2026 Jensen Infrastructure - All rights reserved.
All materials appearing as Jensen Infrastructure documents and the like are proprietary work product and are protected under U.S. copyright and other laws.
Unless in conjunction with business conducted with Jensen Infrastructure , any use of Jensen Infrastructure work product without express, written consent is prohibited, and recipient is prohibited from distributing any and all work product to non-approved third parties under penalty of civil action.
This product shall only be produced in a Jensen Infrastructure facility.

NAME & DESCRIPTION: 200068760 Frame Component Steel Frame End, Adjustable		REV: E-1-2
WEIGHT: 38.226 lbmass	DRAWN BY: R. Dohr	SHEET: 20 OF 25
CREATED: 9/23/2022	MODIFIED: 2/3/2026	

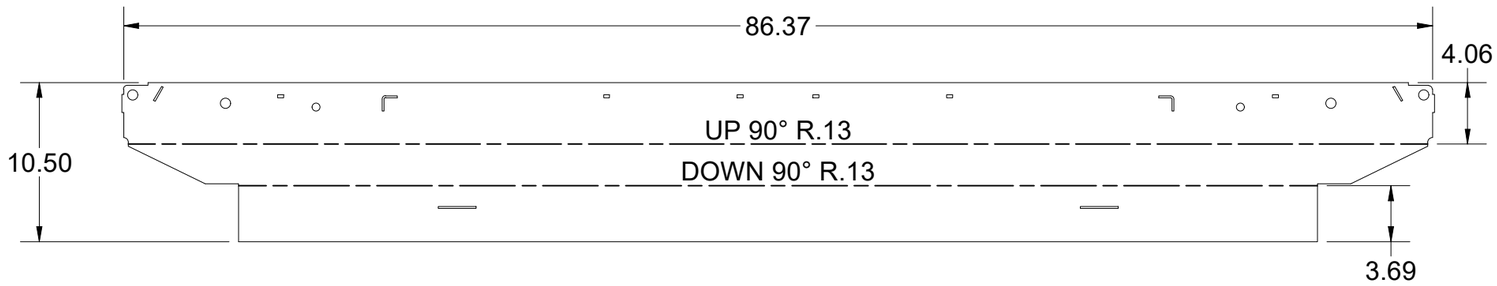

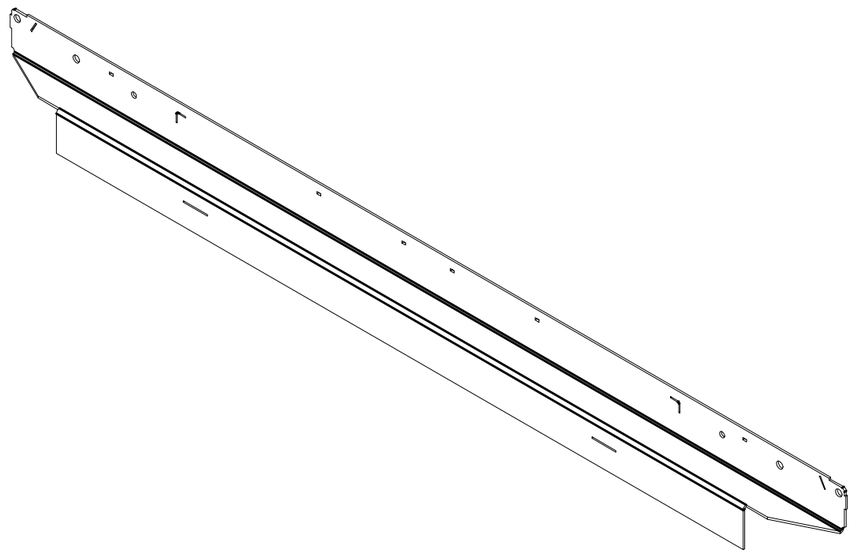



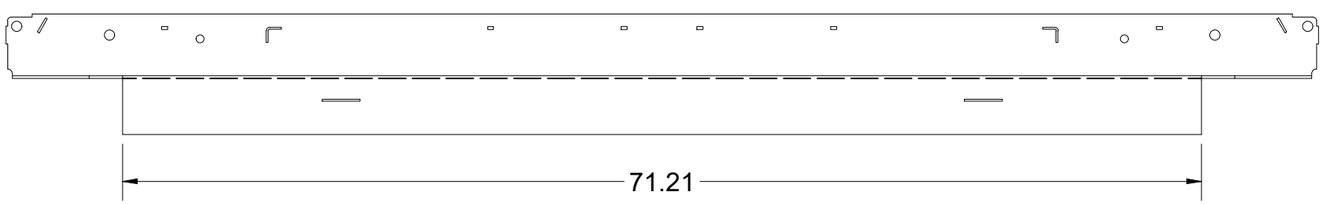

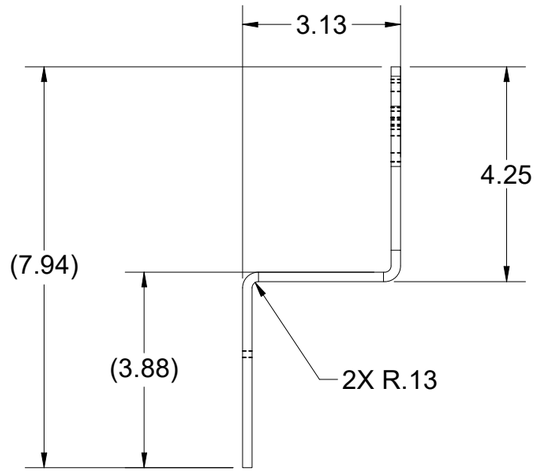

BEND TABLE			
BEND RADIUS	V-OPENING	BEND ANGLE	BEND DEDUCTION
0.125	2	90	0.3750

MATERIAL IFS: 100007734

MATERIAL THK: 0.1875

MAT DESCRIPTION: STL ASTM A36 SM-HRPO 60X120 RAW .1875

Infrastructure JENSEN
527 Dunn Circle, Sparks, NV 89431
775-352-2716 FAX: 755-358-8127
JENSENMETALTECH.COM

©2026 Jensen Infrastructure - All rights reserved.
All materials appearing as Jensen Infrastructure documents and the like are proprietary work product and are protected under U.S. copyright and other laws. Unless in conjunction with business conducted with Jensen Infrastructure , any use of Jensen Infrastructure work product without express, written consent is prohibited, and recipient is prohibited from distributing any and all work product to non-approved third parties under penalty of civil action.
This product shall only be produced in a Jensen Infrastructure facility.

NAME & DESCRIPTION: 200068761
Frame Component Steel Frame Side, Adjustable

REV: E-1-2

WEIGHT: 44.958 lbmass

DRAWN BY: R. Dohr

CREATED: 9/23/2022

MODIFIED: 2/3/2026

SHEET: 21 OF 25

100002422.idw

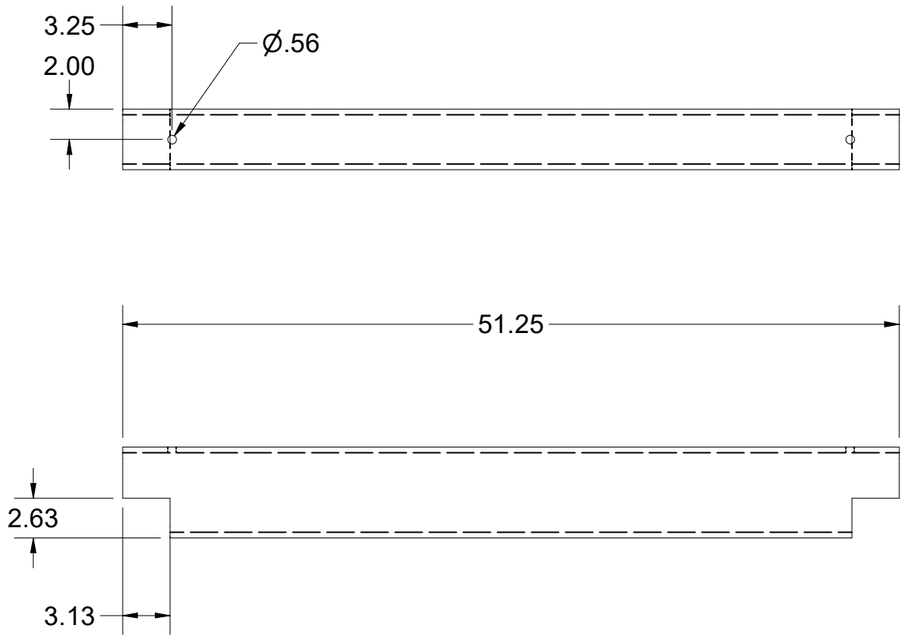

BEND TABLE				MATERIAL IFS: 100005167			
BEND RADIUS	V-OPENING	BEND ANGLE	BEND DEDUCTION	MATERIAL THK: 3/8			
				MAT DESCRIPTION: STRUCTURAL STEEL RECTANGULAR TUBE - 6 x 4 x 3/8			

Infrastructure
JENSEN
527 Dunn Circle, Sparks, NV 89431
775-352-2716 FAX: 755-358-8127
JENSENMETALTECH.COM

©2026 Jensen Infrastructure - All rights reserved.
All materials appearing as Jensen Infrastructure documents and the like are proprietary work product and are protected under U.S. copyright and other laws. Unless in conjunction with business conducted with Jensen Infrastructure , any use of Jensen Infrastructure work product without express, written consent is prohibited, and recipient is prohibited from distributing any and all work product to non-approved third parties under penalty of civil action.
This product shall only be produced in a Jensen Infrastructure facility.

NAME & DESCRIPTION: 200068766 STRUCTURAL STEEL RECTANGULAR TUBE - 6 x 4 x 3/8		REV: E-1-2
WEIGHT: 90.188 lbmass	DRAWN BY: R. Dohr	SHEET: 22 OF 25
CREATED: 9/23/2022	MODIFIED: 2/3/2026	

100002422.idw

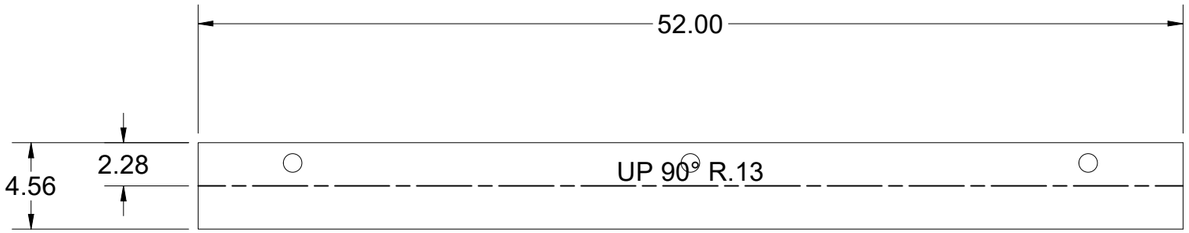

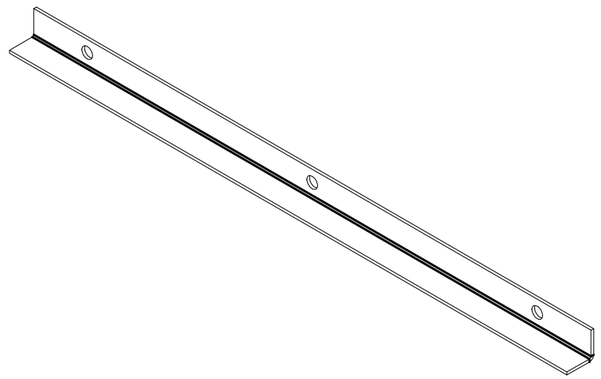

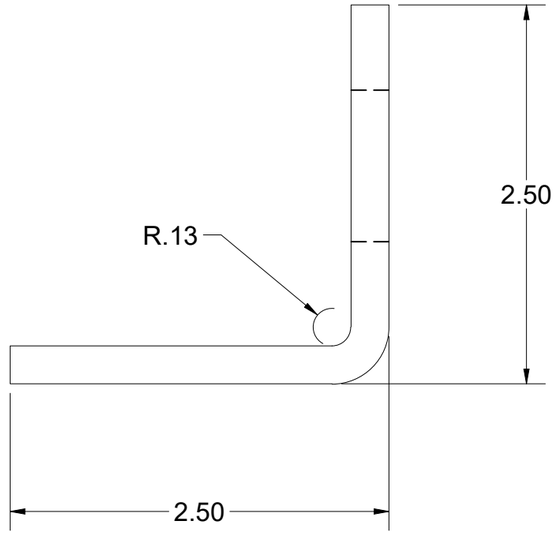

BEND TABLE				MATERIAL IFS: 100007735
BEND RADIUS	V-OPENING	BEND ANGLE	BEND DEDUCTION	MATERIAL THK: 0.25
0.125	2	90	0.440	MAT DESCRIPTION: STL ASTM A36 SM-HRPO RAW .250

Infrastructure
JENSEN
527 Dunn Circle, Sparks, NV 89431
775-352-2716 FAX: 755-358-8127
JENSENMETALTECH.COM

©2026 Jensen Infrastructure - All rights reserved.
All materials appearing as Jensen Infrastructure documents and the like are proprietary work product and are protected under U.S. copyright and other laws. Unless in conjunction with business conducted with Jensen Infrastructure , any use of Jensen Infrastructure work product without express, written consent is prohibited, and recipient is prohibited from distributing any and all work product to non-approved third parties under penalty of civil action.
This product shall only be produced in a Jensen Infrastructure facility.

NAME & DESCRIPTION:	200069890 Frame Component - Leveling Bar	REV:
WEIGHT: 16.974 lbmass	DRAWN BY: R. Dohr	SHEET: 23 OF 25
CREATED: 9/23/2022	MODIFIED: 2/3/2026	

100002422.idw

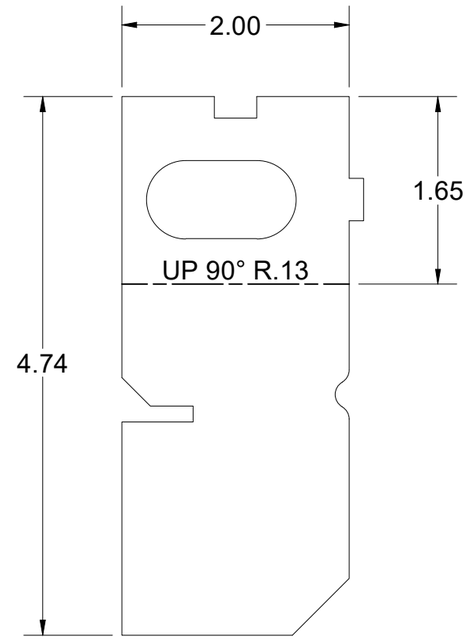

ASYMMETRIC

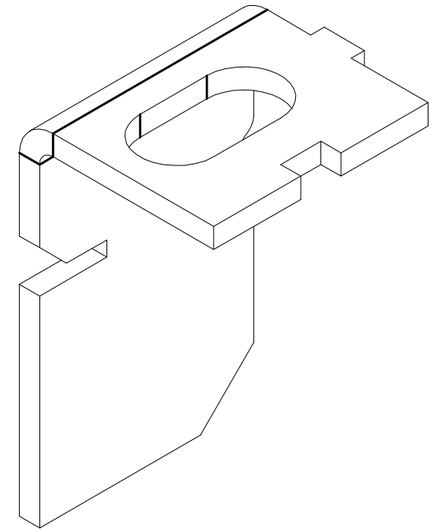

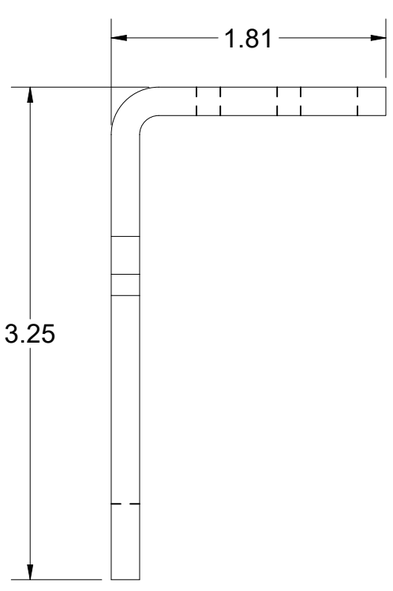

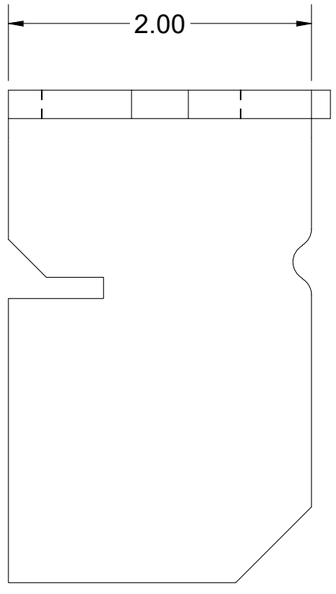

BEND TABLE			
BEND RADIUS	V-OPENING	BEND ANGLE	BEND DEDUCTION
0.125	1	90	0.3250

MATERIAL IFS: 100007734

MATERIAL THK: 0.1875

MAT DESCRIPTION: STL ASTM A36 SM-HRPO 60X120 RAW .1875

Infrastructure
JENSEN
527 Dunn Circle, Sparks, NV 89431
775-352-2716 FAX: 755-358-8127
JENSENMETALTECH.COM

©2026 Jensen Infrastructure - All rights reserved.
All materials appearing as Jensen Infrastructure documents and the like are proprietary work product and are protected under U.S. copyright and other laws. Unless in conjunction with business conducted with Jensen Infrastructure , any use of Jensen Infrastructure work product without express, written consent is prohibited, and recipient is prohibited from distributing any and all work product to non-approved third parties under penalty of civil action.
This product shall only be produced in a Jensen Infrastructure facility.

NAME & DESCRIPTION: 200069159 SQUARE NUT BRACKET-CUSTOM PG&E FVT

REV: E-1-2

WEIGHT: 0.450 lbmass

DRAWN BY: R. Dohr

CREATED: 9/23/2022

MODIFIED: 2/3/2026

SHEET: 24 OF 25

100002422.idw

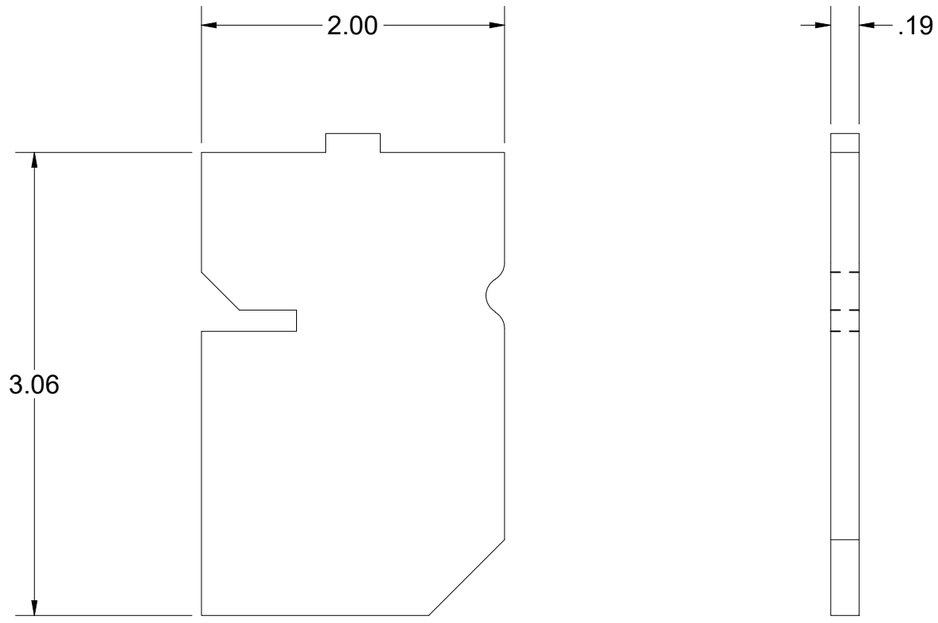

BEND TABLE				MATERIAL IFS: 100007734			
BEND RADIUS	V-OPENING	BEND ANGLE	BEND DEDUCTION	MATERIAL THK: 0.1875			
-	-	-	-	MAT DESCRIPTION: STL ASTM A36 SM-HRPO 60X120 RAW .1875			

Infrastructure
JENSEN
527 Dunn Circle, Sparks, NV 89431
775-352-2716 FAX: 755-358-8127
JENSENMETALTECH.COM

©2026 Jensen Infrastructure - All rights reserved.
All materials appearing as Jensen Infrastructure documents and the like are proprietary work product and are protected under U.S. copyright and other laws. Unless in conjunction with business conducted with Jensen Infrastructure , any use of Jensen Infrastructure work product without express, written consent is prohibited, and recipient is prohibited from distributing any and all work product to non-approved third parties under penalty of civil action.
This product shall only be produced in a Jensen Infrastructure facility.

NAME & DESCRIPTION:	200069158 STANDOFF SIDEWALL	REV:	E-1-2
WEIGHT:	0.313 lbmass	DRAWN BY:	R. Dohr
CREATED:	9/23/2022	MODIFIED:	2/3/2026
		SHEET:	25 OF 25

100002422.idw