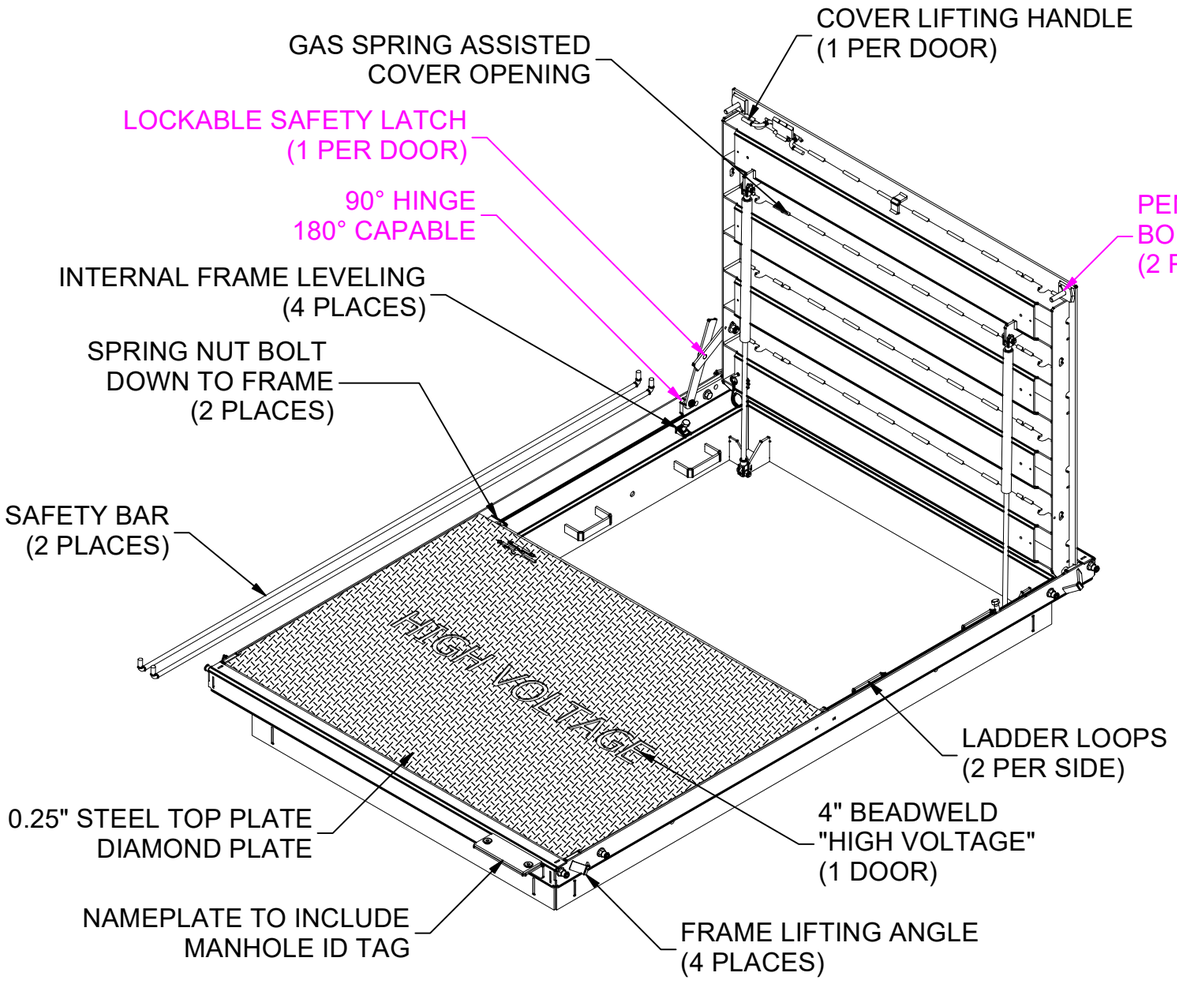

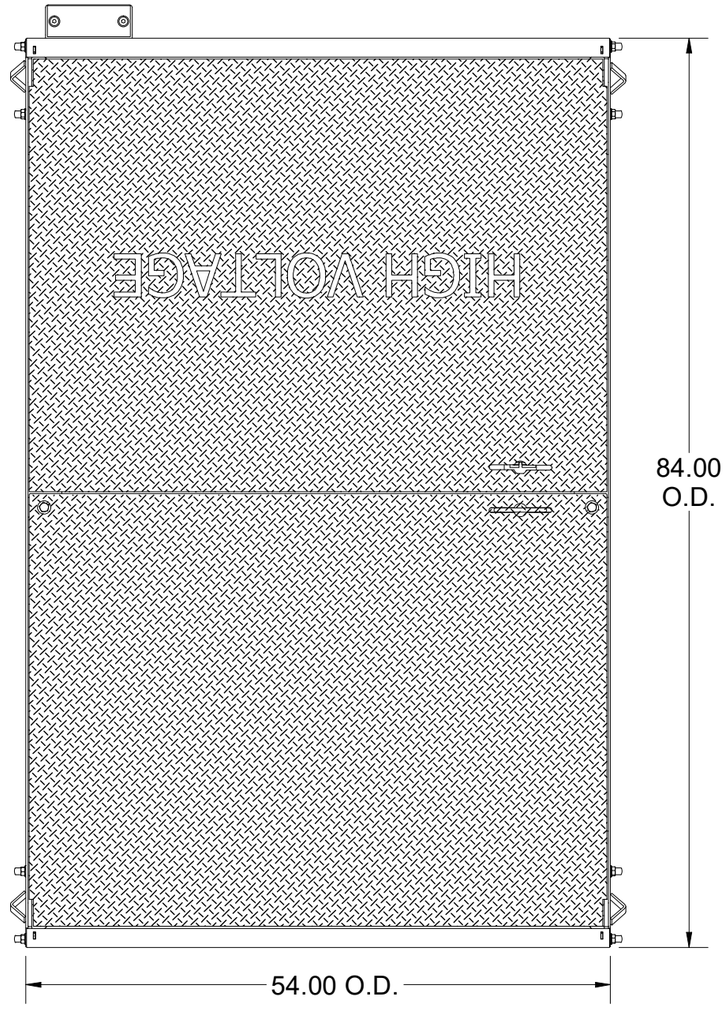

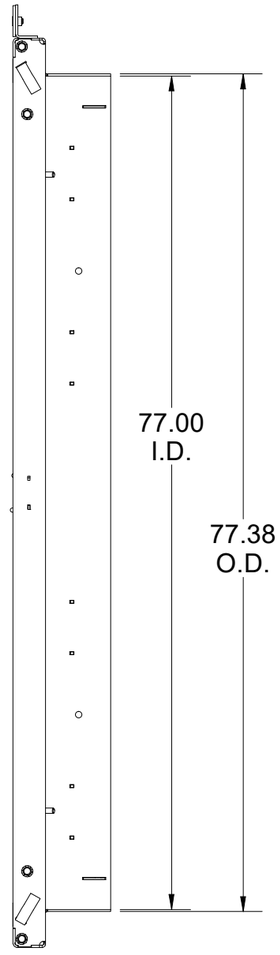

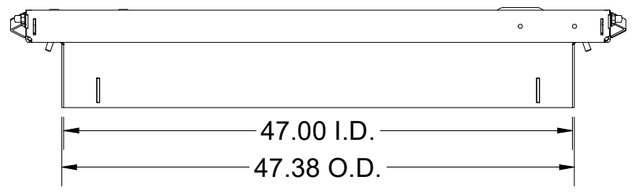

ASTM C1802: Level 04

16,000 lb load on 10" x 20" footprint, without impact restricted to parking spaces and areas within close proximity of roadways.

SURFACE:	Diamond Plate	FINISH:	Galvanized
WEIGHT:	798.41 lbs	MARKING:	As Noted

JENSEN METALTECH
450 E. GLENDALE AVE. SPARKS. NV 89431
775-352-2716 FAX: 755-358-8127
JENSENMETALTECH.COM

©2023 Jensen Precast- All rights reserved.
All materials appearing as Jensen Precast documents and the like are proprietary work product and are protected under U.S. copyright and other laws.
Unless in conjunction with business conducted with Jensen Precast, any use of Jensen Precast work product without express, written consent is prohibited, and recipient is prohibited from distributing any and all work product to non-approved third parties under penalty of civil action.

DESCRIPTION: CAS2-4878-AH4-DP-G-LL-LV-OH09-BW-HIGH VOLTAGE

49x79 Cover Assembly (ASTM Load Level 04, 2 Door, Steel, Hinged, Diamond Plate, Galvanized , Ladder Loops , N/A) OH 09

PART NUMBER:	200070179	DRAWN BY:	M. Newman
CREATED:	11/15/2022	MODIFIED:	3/29/2023

REV: A-2

SHEET: 1

200070179.idw

BILL OF MATERIALS

ITEM	UNIT QTY	QTY	PART NUMBER	DESCRIPTION
1	1	1	100002389	CAS2-4878-AH4-DP-G-BD-LL-LV-OH09

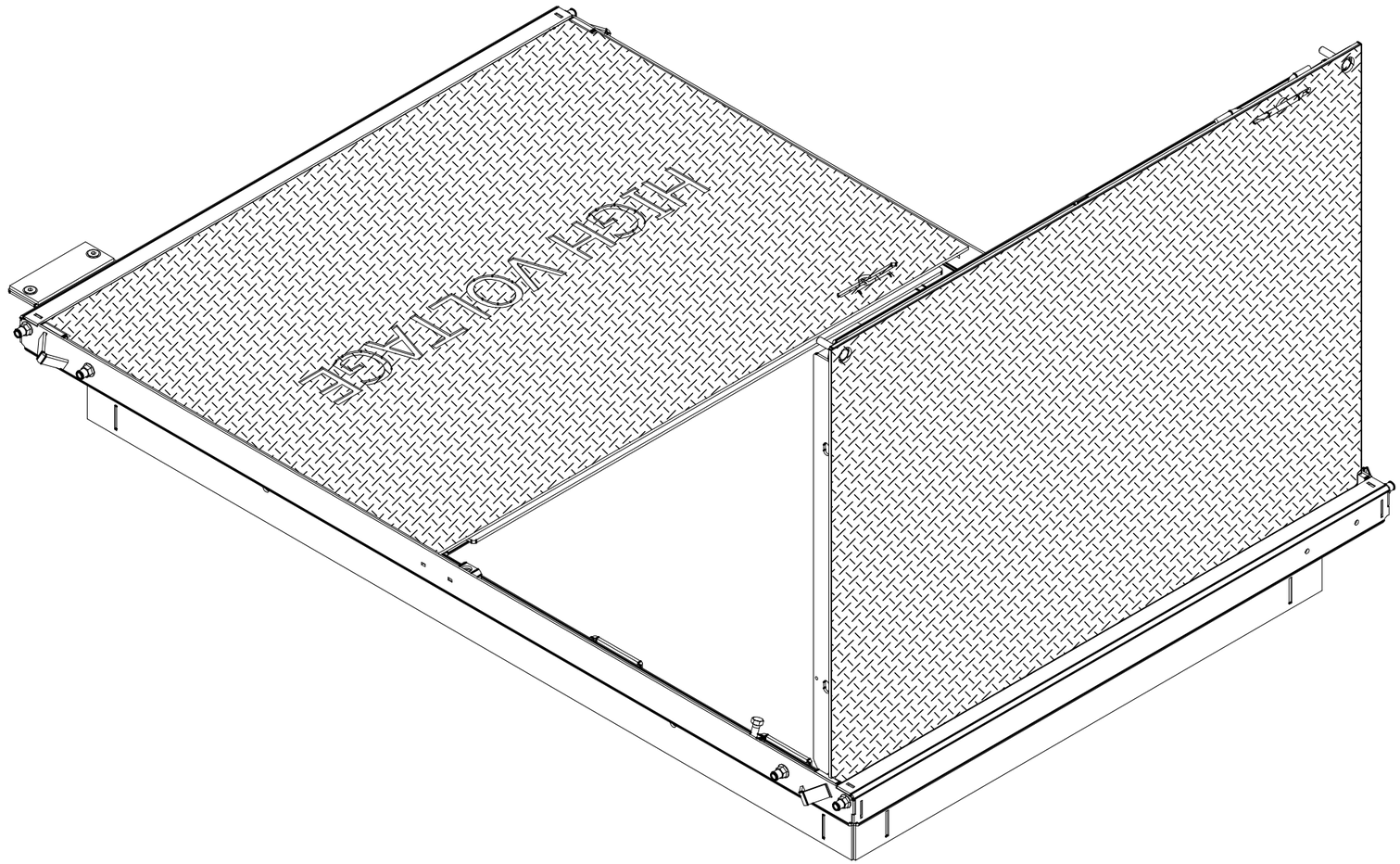

20007017 9.idw

REVISION HISTORY

DESCRIPTION	DATE

MATERIAL FINISH: Galvanized

MATERIAL SURFACE: Diamond Plate

JENSEN METALTECH
450 E. GLENDALE AVE. SPARKS. NV 89431
775-352-2716 FAX: 755-358-8127
JENSENMETALTECH.COM

©2023 Jensen Precast- All rights reserved.
All materials appearing as Jensen Precast documents and the like are proprietary work product and are protected under U.S. copyright and other laws.
Unless in conjunction with business conducted with Jensen Precast, any use of Jensen Precast work product without express, written consent is prohibited, and recipient is prohibited from distributing any and all work product to non-approved third parties under penalty of civil action.

PART NUMBER & DESCRIPTION: 200070179 CAS2-4878-AH4-DP-G-LL-LV-OH09-BW-HIGH VOLTAGE

REV: A-2

WEIGHT: 798.41 Lbs

DRAWN BY: M. Newman

CREATED: 11/15/2022

MODIFIED: 3/29/2023

SHEET: 2

BILL OF MATERIALS

ITEM	UNIT QTY	QTY	PART NUMBER	DESCRIPTION
5	1	8	100011418	WASHER FLAT 1/2 NARROW ZINC
6	1	8	100007939	CAP VINYL .467 X 1/2
7	1	2	100007933	SAFETY LATCH ASSY FOR UNI AND 90 D HINGE
8	1	2	100007924	LANYARD 3/64 W/PIN COATED SS
9	1	8	100007913	GAS SPRING CLEVIS
10	1	2	100007882	Rivet Blind Grip .1875" Large Domed Head Range-0.376-0.5" Steel
11	1	2	100007876	Bolt Shoulder Socket Head - 3/8-16 UNC - SD-0.5" - SL-0.3125" - Grade 5 - Zinc
12	1	4	100007869	BOLT SHCS 1/2-13 X 1-3/4 SS
13	1	2	100007733	BOLT HEX SOCKET FLAT COUNTERSUNK HEAD 1/2-13 UNC 1 GR 5 ZINC-PLATED
14	1	2	100007696	SAFETY BAR CAS2-4878 HNG
15	1	2	100007666	Hinge Assembly, Right, Steel
16	1	2	100007492	HEX NUT NYLOCK - 1/2-13 UNC - GR5 - ZINC
17	1	2	100007441	STRUT FITTING SPRING NUT 1/2-13 UNC 1-5/8 CHANNEL REGULAR SPRING ZINC
18	1	1	100007391	NAME PLATE STEEL - BLANK
19	1	4	100005059	BOLT HEX 1/2-13 UNC 2.5 ZINC
20	1	4	100003823	Hex Bolt 1/2-13 UNC ZINC - PT - 1.5"
4	1	8	100026256	LOW-STRENGTH STEEL FLANGE NUT, 1/2" - 13 THREAD SIZE
27	1	4	100007641	FRAME LIFTING BRACKET
28	1	1	100007667	NAME PLATE FRAME ANGLE
29	1	2	100007728	NUT SELF-CLINCH 1/2-13 S-0813-1 RAW
30	1	4	100007863	NUT LEVELER 1/2-13 WELDABLE CAST STEEL
31	1	4	100007686	CLEVIS MOUNT
32	1	4	100007688	STIFFENER CLEVIS
33	1	8	100007683	LADDER LOOP
34	1	2	100024179	SPRING NUT BRACKET
35	50.949 lbmass	101.899 lbmass	100007734	Frame Component Steel Frame Side, Adjustable Clevis Mount,Ladder Loops
36	35.988 lbmass	71.977 lbmass	100007734	Frame Component Steel Frame End, Adjustable Clevis Mount
37	1	4	200018691	FRAME BOLT DOUBLER SLOT
21	1	2	100007749	BOLT PENTA 1/2-13 UNC 0.875 HEAD 2.25L SS DRILLED
22	1	2	100007665	Hinge Assembly, Left, Steel
23	1	4	100014839	GAS SPRING 250 LBS FORCE 34.84IN
24	1	8	100003501	Hex Bolt 3/8-16 UNC ZINC - PT - 1.5"
25	1	16	100002654	WASHER FLAT 3/8 NARROW TYPE A SS A316 ZINC
26	1	8	100007497	HEX NUT NYLOCK - 3/8-16 UNC - 304SS
38	1	2	100007644	LEAF PULL HANDLE A36 3/8IN DIAMETER
39	1	2	100007647	LIFTING BRACKET STEEL LEAF
40	1	1	100007646	HANDLE RETAINER STL
41	1	2	100007675	CAM BASE
42	4.847 lbmass	19.390 lbmass	100007821	Door Component Steel Side Bar
43	27.217 lbmass	217.736 lbmass	100007821	Door Component Steel Channel
44	166.234 lbmass	166.234 lbmass	100007736	Door Component Steel Plate, Top
45	0.382 lbmass	1.528 lbmass	100007735	CUSTOM GAS SPRING DOOR MOUNT
46	166.426 lbmass	166.426 lbmass	100007736	Door Component Steel Plate, Bottom
47	6.293 lbmass	6.293 lbmass	100007735	Door Component Steel Lap Bar 48in, 2.5" Stiffener Offset

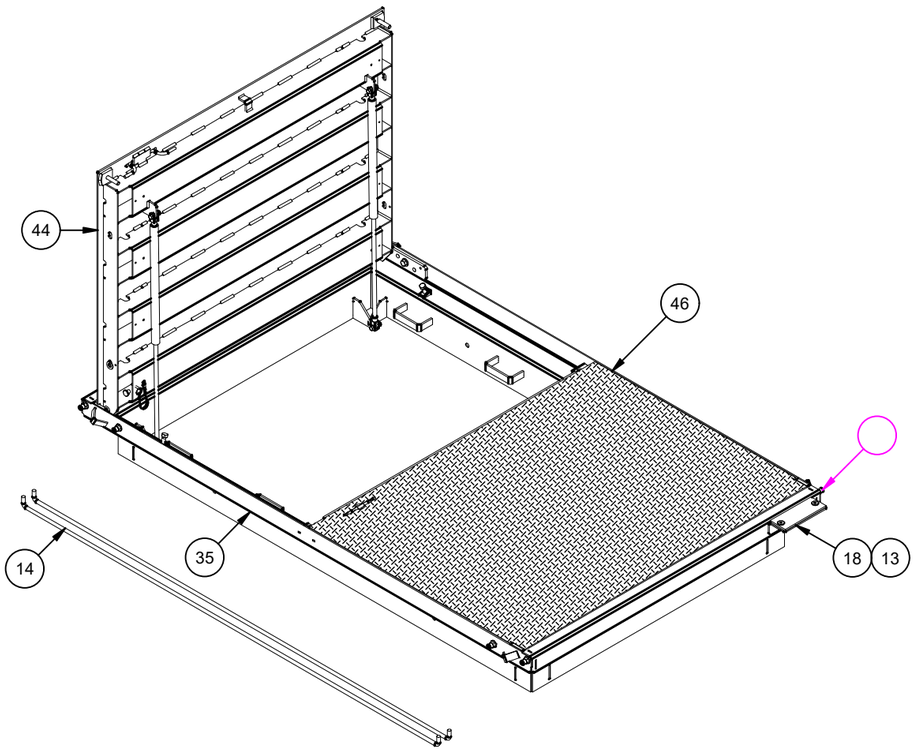

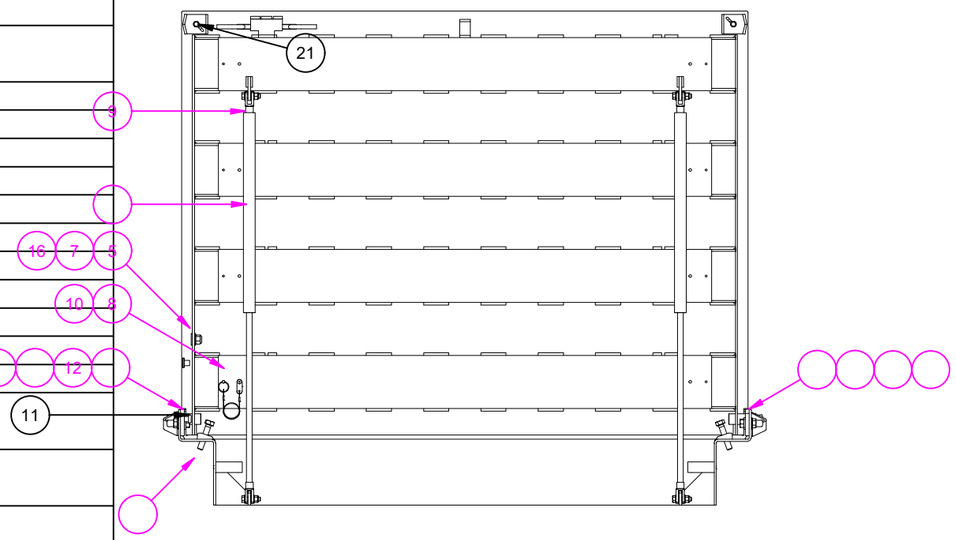

20007017 9.idw

MATERIAL FINISH: Galvanized

MATERIAL SURFACE: Diamond Plate

JENSEN METALTECH

450 E. GLENDALE AVE. SPARKS. NV 89431
775-352-2716 FAX: 755-358-8127
JENSENMETALTECH.COM

©2023 Jensen Precast- All rights reserved.
All materials appearing as Jensen Precast documents and the like are proprietary work product and are protected under U.S. copyright and other laws.
Unless in conjunction with business conducted with Jensen Precast, any use of Jensen Precast work product without express, written consent is prohibited, and recipient is prohibited from distributing any and all work product to non-approved third parties under penalty of civil action.

PART NUMBER & DESCRIPTION: 100002389
CAS2-4878-AH4-DP-G-BD-LL-LV-OH09

REV: F-1

WEIGHT: 806.38 Lbs

DRAWN BY: M. Newman

CREATED: 6/25/2021

MODIFIED: 3/29/2023

SHEET: 3

BURN LIST - BOM

PART NUMBER	DESCRIPTION	STOCK NUMBER	MATERIAL	MASS	SHEET
100007734	Frame Component Steel Frame End, Adjustable Clevis Mount	100007734	STL ASTM A36 SM-HRPO 60X120 RAW .1875	35.988 lbmass	08
100007734	Frame Component Steel Frame Side, Adjustable Clevis Mount,Ladder Loops	100007734	STL ASTM A36 SM-HRPO 60X120 RAW .1875	50.917 lbmass	09
100007736	Door Component Steel Plate, Bottom	100007736	SHT STL CQ DP RAW .25 - 36 KSI YIELD	166.426 lbmass	10
100007736	Door Component Steel Plate, Top	100007736	SHT STL CQ DP RAW .25 - 36 KSI YIELD	166.234 lbmass	11
100007821	Door Component Steel Side Bar	100007821	SHT STL GR80 SM-HRPO RAW .1875	4.847 lbmass	12
100007821	Door Component Steel Channel	100007821	SHT STL GR80 SM-HRPO RAW .1875	27.217 lbmass	13
100007735	CUSTOM GAS SPRING DOOR MOUNT	100007735	STL ASTM A36 SM-HRPO RAW .250	0.385 lbmass	14
100007749	BOLT PENTA 1/2-13 UNC 0.875 HEAD 2.25L SS DRILLED		Stainless Steel	0.179 lbmass	
100007933	SAFETY LATCH ASSY FOR UNI AND 90 D HINGE			1.492 lbmass	
100007735	Door Component Steel Lap Bar 48in, 2.5" Stiffener Offset	100007735	STL ASTM A36 SM-HRPO RAW .250	6.293 lbmass	
100003501	Hex Bolt 3/8-16 UNC ZINC - PT - 1.5"		Steel, Mild	0.068 lbmass	
100002654	WASHER FLAT 3/8 NARROW TYPE A SS A316 ZINC		Steel, Mild	0.007 lbmass	
100007497	HEX NUT NYLOCK - 3/8-16 UNC - 304SS		Stainless Steel AISI 304	0.023 lbmass	

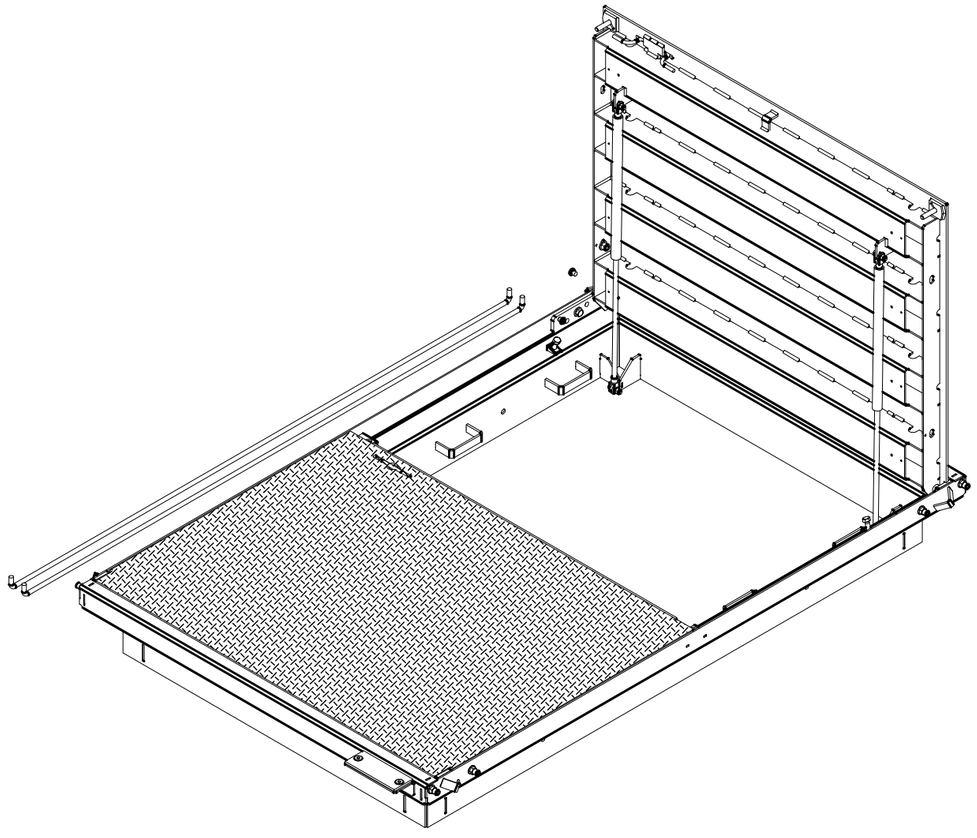

20007017 9.idw

MATERIAL FINISH: Galvanized

MATERIAL SURFACE: Diamond Plate

JENSEN METALTECH
450 E. GLENDALE AVE. SPARKS. NV 89431
775-352-2716 FAX: 755-358-8127
JENSENMETALTECH.COM

©2023 Jensen Precast- All rights reserved.
All materials appearing as Jensen Precast documents and the like are proprietary work product and are protected under U.S. copyright and other laws.
Unless in conjunction with business conducted with Jensen Precast, any use of Jensen Precast work product without express, written consent is prohibited, and recipient is prohibited from distributing any and all work product to non-approved third parties under penalty of civil action.

PART NUMBER & DESCRIPTION: 100002389 CAS2-4878-AH4-DP-G-BD-LL-LV-OH09

REV: F-1

WEIGHT: 806.38 Lbs

DRAWN BY: M. Newman

CREATED: 6/25/2021

MODIFIED: 3/29/2023

SHEET: 4

BILL OF MATERIALS

ITEM	UNIT QTY	QTY	PART NUMBER	DESCRIPTION
4	0.382 lbm ass	0.764 lbm ass	100007735	CUSTOM GAS SPRING DOOR MOUNT
3	27.217 lbm ass	108.868 lbm ass	100007821	Door Component Steel Channel
5	6.293 lbm ass	6.293 lbm ass	100007735	Door Component Steel Lap Bar 48in, 2.5" Stiffener Offset
1	166.426 lbm ass	166.426 lbm ass	100007736	Door Component Steel Plate, Bottom
2	4.847 lbm ass	9.695 lbm ass	100007821	Door Component Steel Side Bar
6	1	1	100007644	LEAF PULL HANDLE A36 3/8IN DIAMETER
7	1	1	100007647	LIFTING BRACKET STEEL LEAF

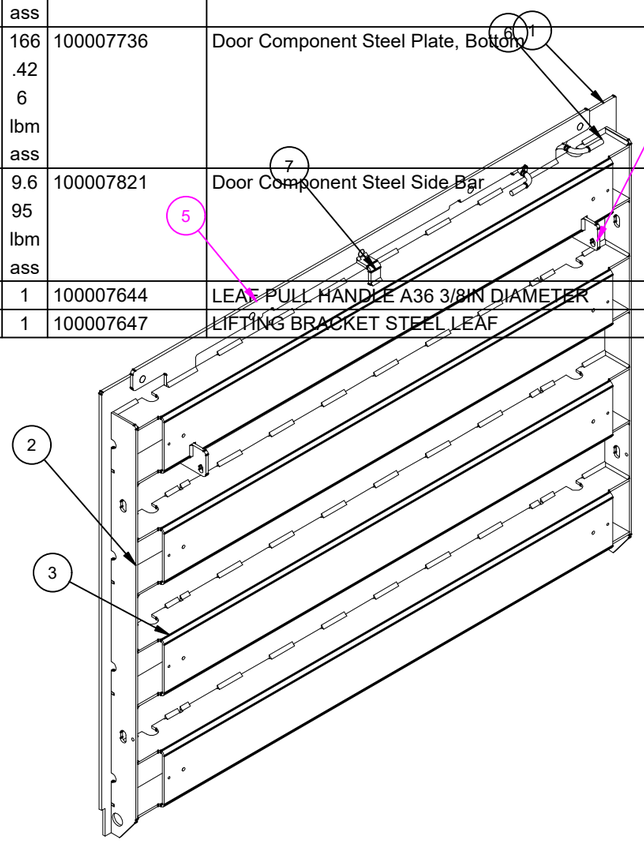

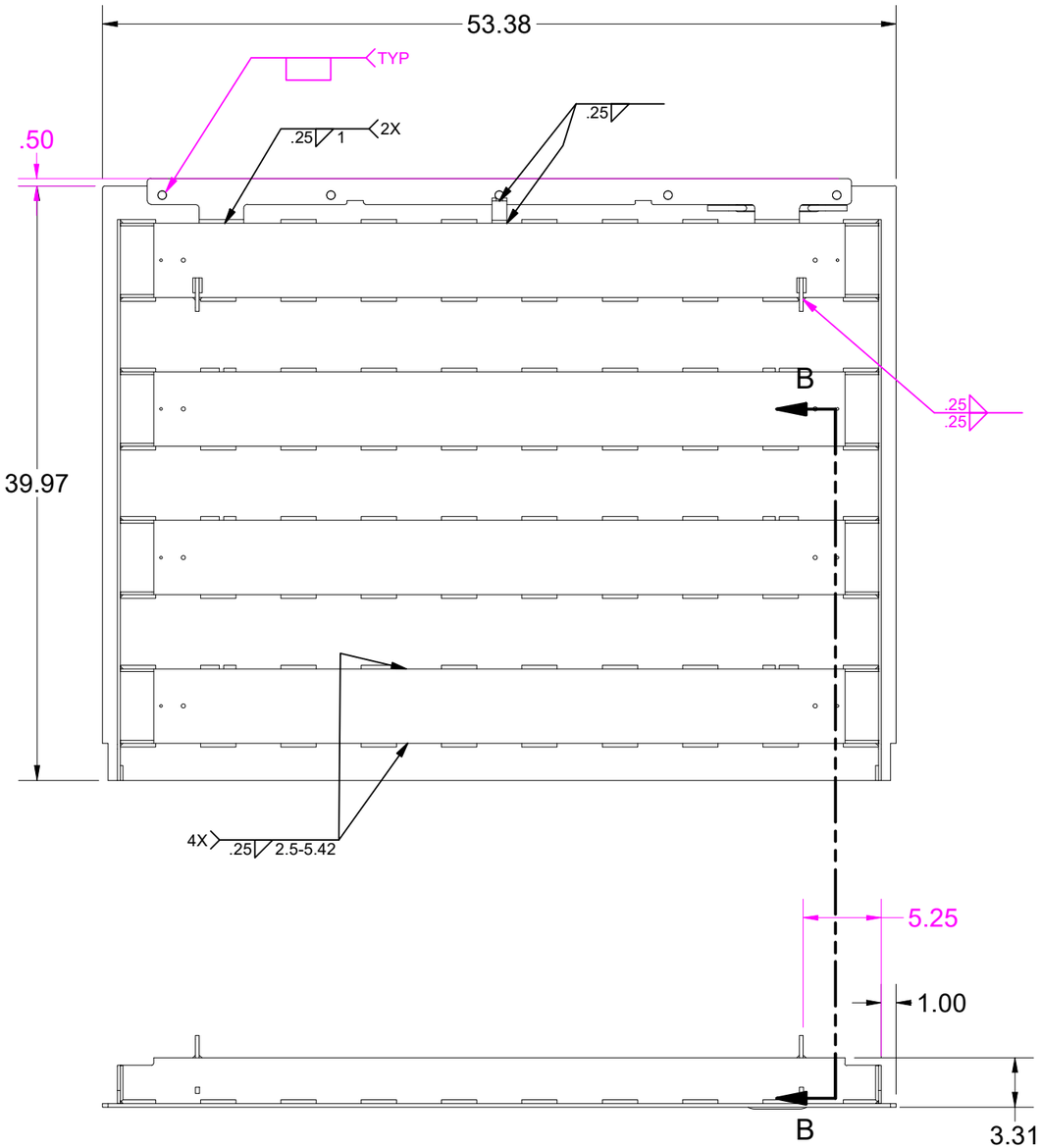

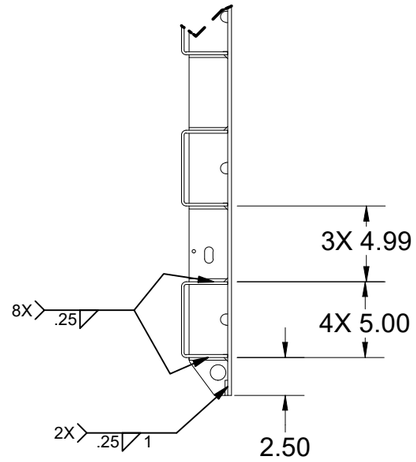

SECTION B-B

MATERIAL FINISH: Raw	JENSEN METALTECH 450 E. GLENDALE AVE. SPARKS. NV 89431 775-352-2716 FAX: 755-358-8127 *JENSENMETALTECH.COM*	©2023 Jensen Precast- All rights reserved. All materials appearing as Jensen Precast documents and the like are proprietary work product and are protected under U.S. copyright and other laws. Unless in conjunction with business conducted with Jensen Precast, any use of Jensen Precast work product without express, written consent is prohibited, and recipient is prohibited from distributing any and all work product to non-approved third parties under penalty of civil action.	PART NUMBER & DESCRIPTION: 200054122 DAS2-B-4878-H4-DP-R-CL-LV
MATERIAL SURFACE: Diamond Plate			WEIGHT: 294.33 Lbs CREATED: 6/25/2021 DRAWN BY: M. Newman MODIFIED: 3/29/2023

REV: C-3-1

SHEET: 5

200070179.idw

BILL OF MATERIALS

ITEM	UNIT QTY	QTY	PART NUMBER	DESCRIPTION
8	1	2	100007675	CAM BASE
4	0.382 lbm ass	0.764 lbm ass	100007735	CUSTOM GAS SPRING DOOR MOUNT
3	27.217 lbm ass	108.868 lbm ass	100007821	Door Component Steel Channel
1	166.234 lbm ass	166.234 lbm ass	100007736	Door Component Steel Plate, Top
2	4.847 lbm ass	9.695 lbm ass	100007821	Door Component Steel Side Bar
7	1	1	100007646	HANDLE RETAINER STL
5	1	1	100007644	LEAF PULL HANDLE A36 3/8IN DIAMETER
6	1	1	100007647	LIFTING BRACKET STEEL LEAF

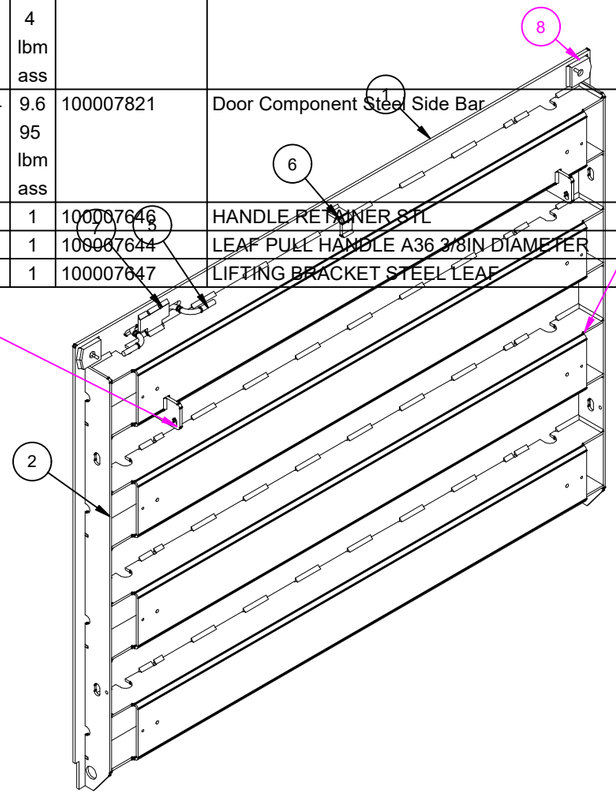

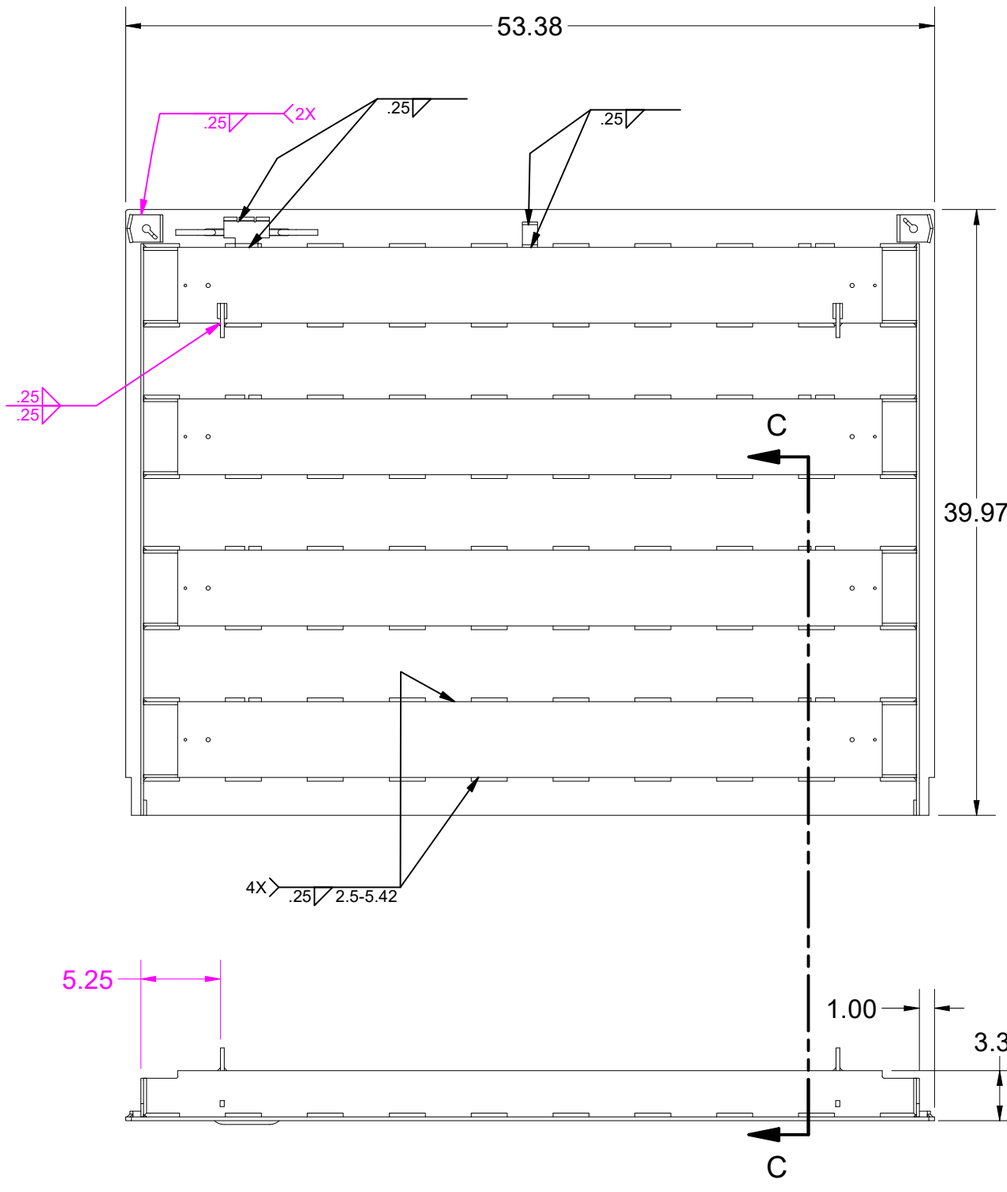

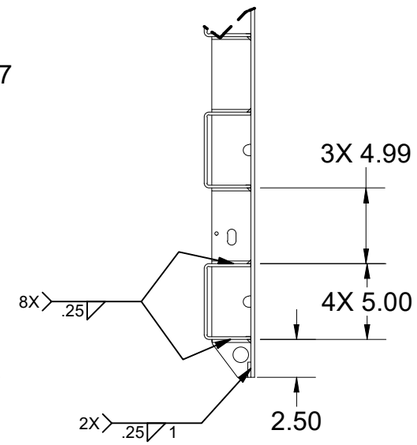

SECTION C-C

MATERIAL FINISH: Raw	JENSEN METALTECH 450 E. GLENDALE AVE. SPARKS. NV 89431 775-352-2716 FAX: 755-358-8127 *JENSENMETALTECH.COM*	©2023 Jensen Precast- All rights reserved. All materials appearing as Jensen Precast documents and the like are proprietary work product and are protected under U.S. copyright and other laws. Unless in conjunction with business conducted with Jensen Precast, any use of Jensen Precast work product without express, written consent is prohibited, and recipient is prohibited from distributing any and all work product to non-approved third parties under penalty of civil action.	PART NUMBER & DESCRIPTION: 200054127 DAS2-T-4878-H4-DP-R-CL-LV / REV: D-3-1
MATERIAL SURFACE: Diamond Plate			WEIGHT: 288.64 Lbs / DRAWN BY: M. Newman / SHEET: 6
			CREATED: 6/25/2021 / MODIFIED: 3/29/2023

20007017 9.idw

BILL OF MATERIALS

ITEM	UNIT QTY	QTY	PART NUMBER	DESCRIPTION
1	50.949 lbm ass	101.89 9 lbm ass	100007734	Frame Component Steel Frame Side, Adjustable Clevis Mount,Ladder Loops
2	35.988 lbm ass	71.977 lbm ass	100007734	Frame Component Steel Frame End, Adjustable Clevis Mount
3	1	4	200018691	FRAME BOLT DOUBLER SLOT
4	1	2	100024179	SPRING NUT BRACKET
5	1	4	100007863	NUT LEVELER 1/2-13 WELDABLE CAST STEEL
6	1	2	100007728	NUT SELF-CLINCH 1/2-13 S-0813-1 RAW
7	1	4	100007688	STIFFENER CLEVIS
8	1	4	100007686	CLEVIS MOUNT
9	1	8	100007683	LADDER LOOP
10	1	1	100007667	NAME PLATE FRAME ANGLE
11	1	4	100007641	FRAME LIFTING BRACKET

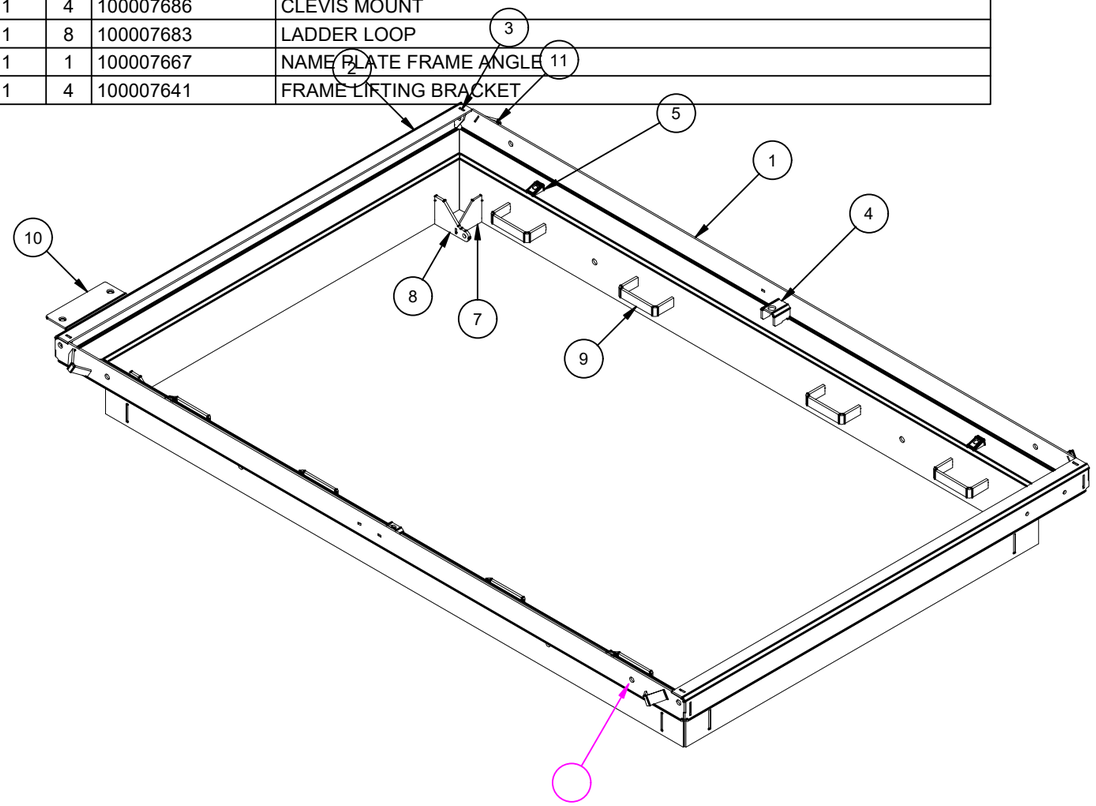

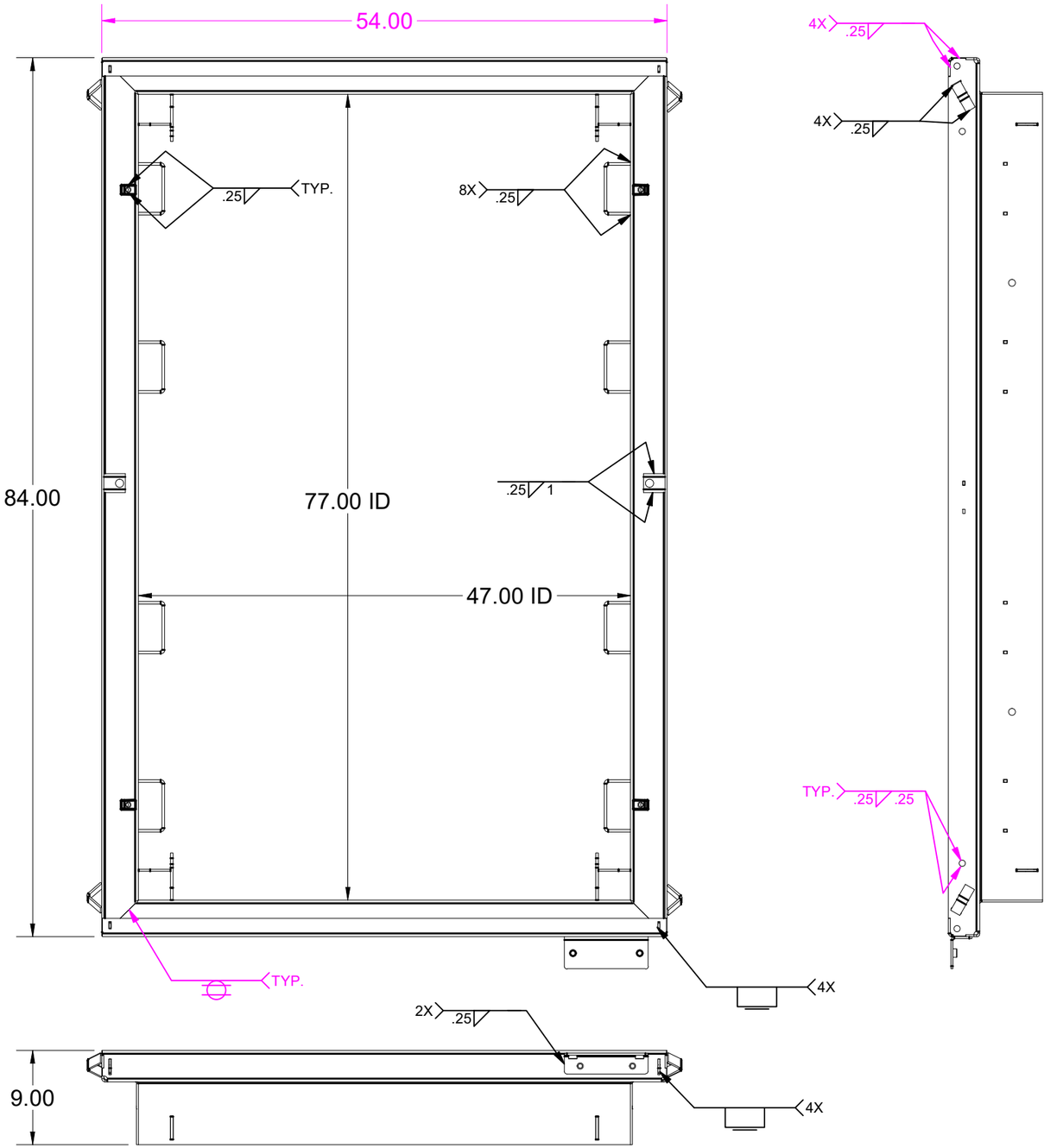

20007017 9.idw

MATERIAL FINISH: Raw	JENSEN METALTECH 450 E. GLENDALE AVE. SPARKS. NV 89431 775-352-2716 FAX: 755-358-8127 *JENSENMETALTECH.COM*	©2023 Jensen Precast- All rights reserved. All materials appearing as Jensen Precast documents and the like are proprietary work product and are protected under U.S. copyright and other laws. Unless in conjunction with business conducted with Jensen Precast, any use of Jensen Precast work product without express, written consent is prohibited, and recipient is prohibited from distributing any and all work product to non-approved third parties under penalty of civil action.	PART NUMBER & DESCRIPTION: 200054129 FAS-4878-AH4-R-LL-LV-OH09 — REV:
MATERIAL SURFACE: Smooth			WEIGHT: 188.28 Lbs — DRAWN BY: M. Newman — SHEET: 7
			CREATED: 6/25/2021 — MODIFIED: 3/29/2023

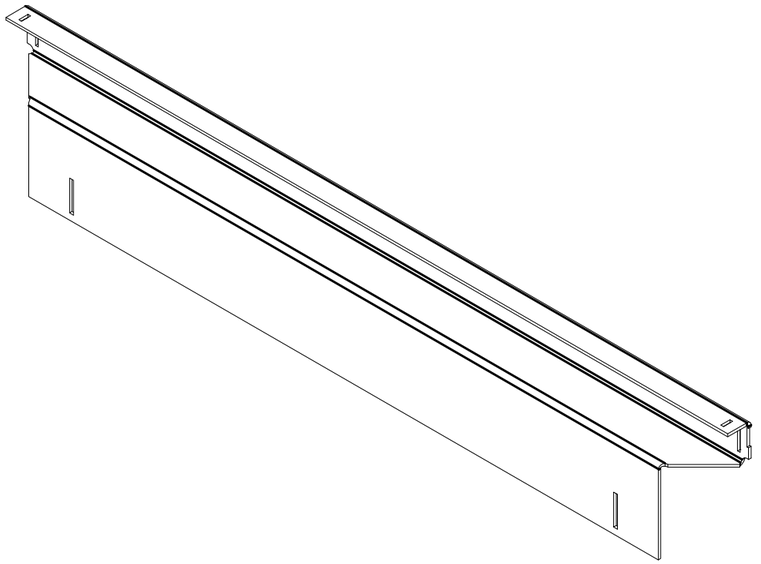

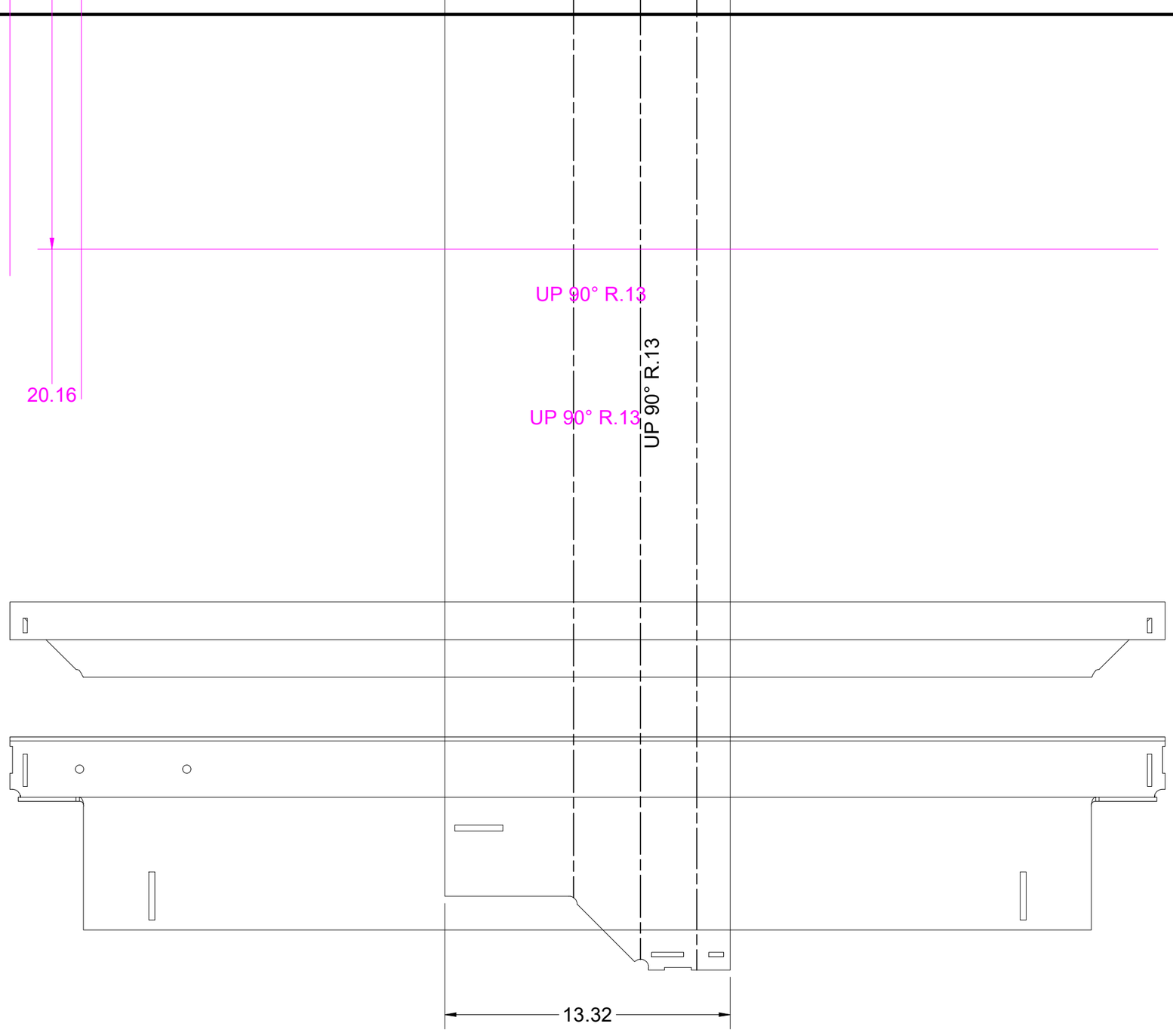

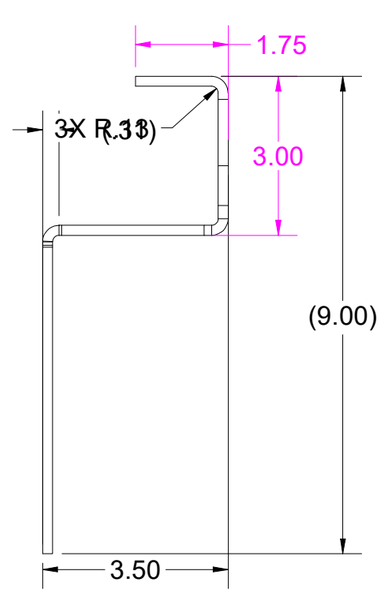

BEND TABLE			
BEND RADIUS	V-OPENING	BEND ANGLE	BEND DEDUCTION
0.125	2	90	0.375

MATERIAL IFS: 100007734

MATERIAL THK: 0.1875

MAT DESCRIPTION: STL ASTM A36 SM-HRPO 60X120 RAW .1875

JENSEN METALTECH
450 E. GLENDALE AVE. SPARKS. NV 89431
775-352-2716 FAX: 755-358-8127
JENSENMETALTECH.COM

©2023 Jensen Precast- All rights reserved. All materials appearing as Jensen Precast documents and the like are proprietary work product and are protected under U.S. copyright and other laws. Unless in conjunction with business conducted with Jensen Precast, any use of Jensen Precast work product without express, written consent is prohibited, and recipient is prohibited from distributing any and all work product to non-approved third parties under penalty of civil action.

NAME & DESCRIPTION: 200054130 — Frame Component Steel Frame End, Adjustable Clevis Mount

REV: A

WEIGHT: 35.988 lbmass

DRAWN BY: M. Newman

CREATED: 10/29/2018

MODIFIED: 3/29/2023

SHEET: 8 OF 15

200070179.idw

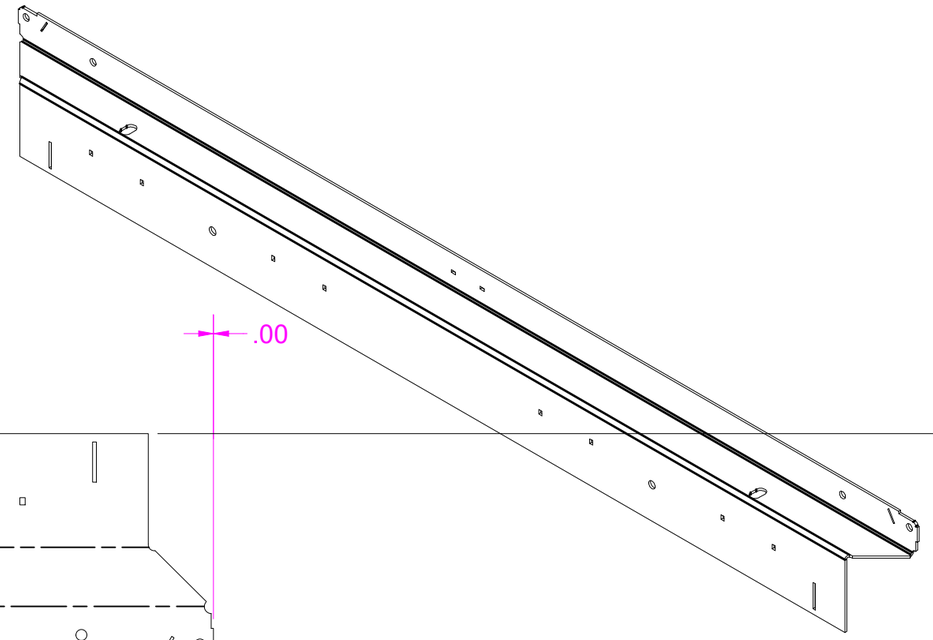

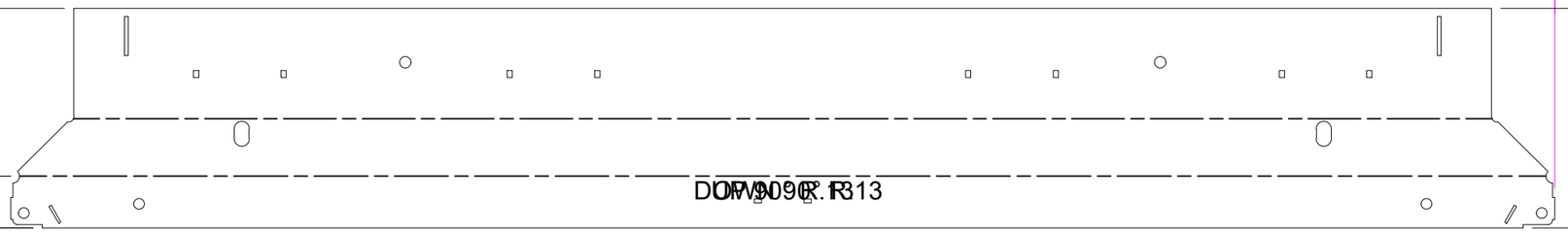

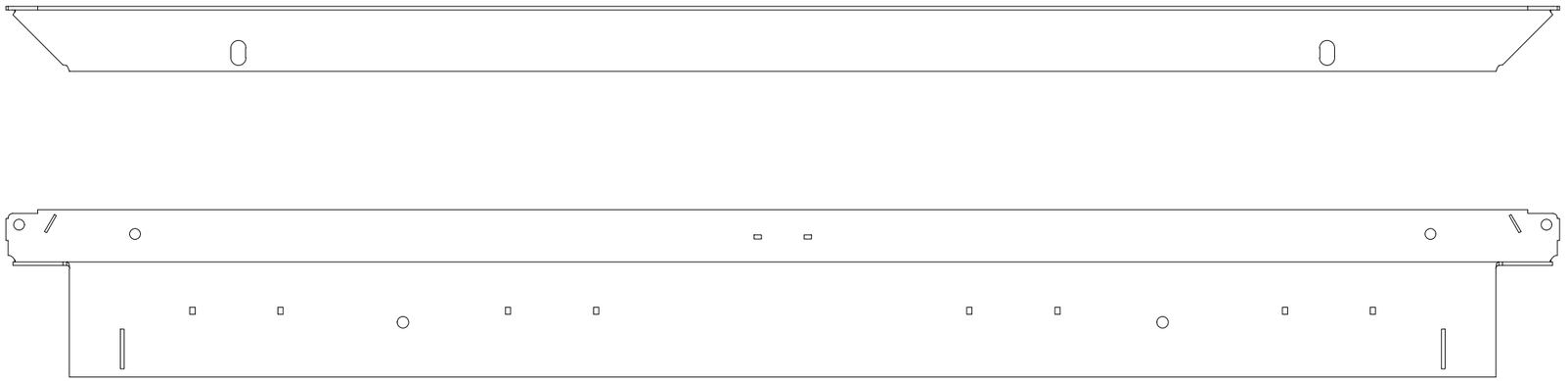

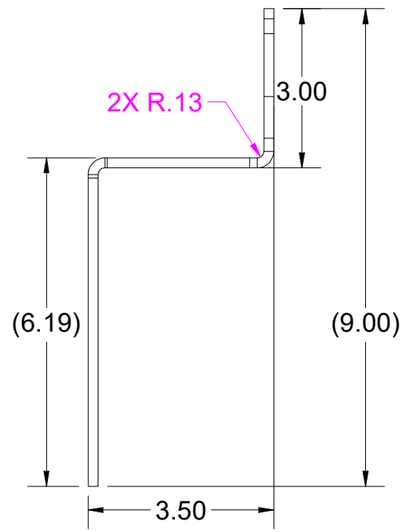

BEND TABLE			
BEND RADIUS	V-OPENING	BEND ANGLE	BEND DEDUCTION
0.125	2	90	0.375

MATERIAL IFS: 100007734

MATERIAL THK: 0.1875

MAT DESCRIPTION: STL ASTM A36 SM-HRPO 60X120 RAW .1875

JENSEN METALTECH
450 E. GLENDALE AVE. SPARKS. NV 89431
775-352-2716 FAX: 755-358-8127
JENSENMETALTECH.COM

©2023 Jensen Precast- All rights reserved.
All materials appearing as Jensen Precast documents and the like are proprietary work product and are protected under U.S. copyright and other laws.
Unless in conjunction with business conducted with Jensen Precast, any use of Jensen Precast work product without express, written consent is prohibited, and recipient is prohibited from distributing any and all work product to non-approved third parties under penalty of civil action.

NAME & DESCRIPTION: 200054131
Frame Component Steel Frame Side, Adjustable Clevis Mount,Ladder Loops

REV: A

WEIGHT: 50.917 lbmass

DRAWN BY: M. Newman

CREATED: 12/11/2018

MODIFIED: 3/29/2023

SHEET: 9 OF 15

DO NOT SCALE DRAWING

20007017 9.idw

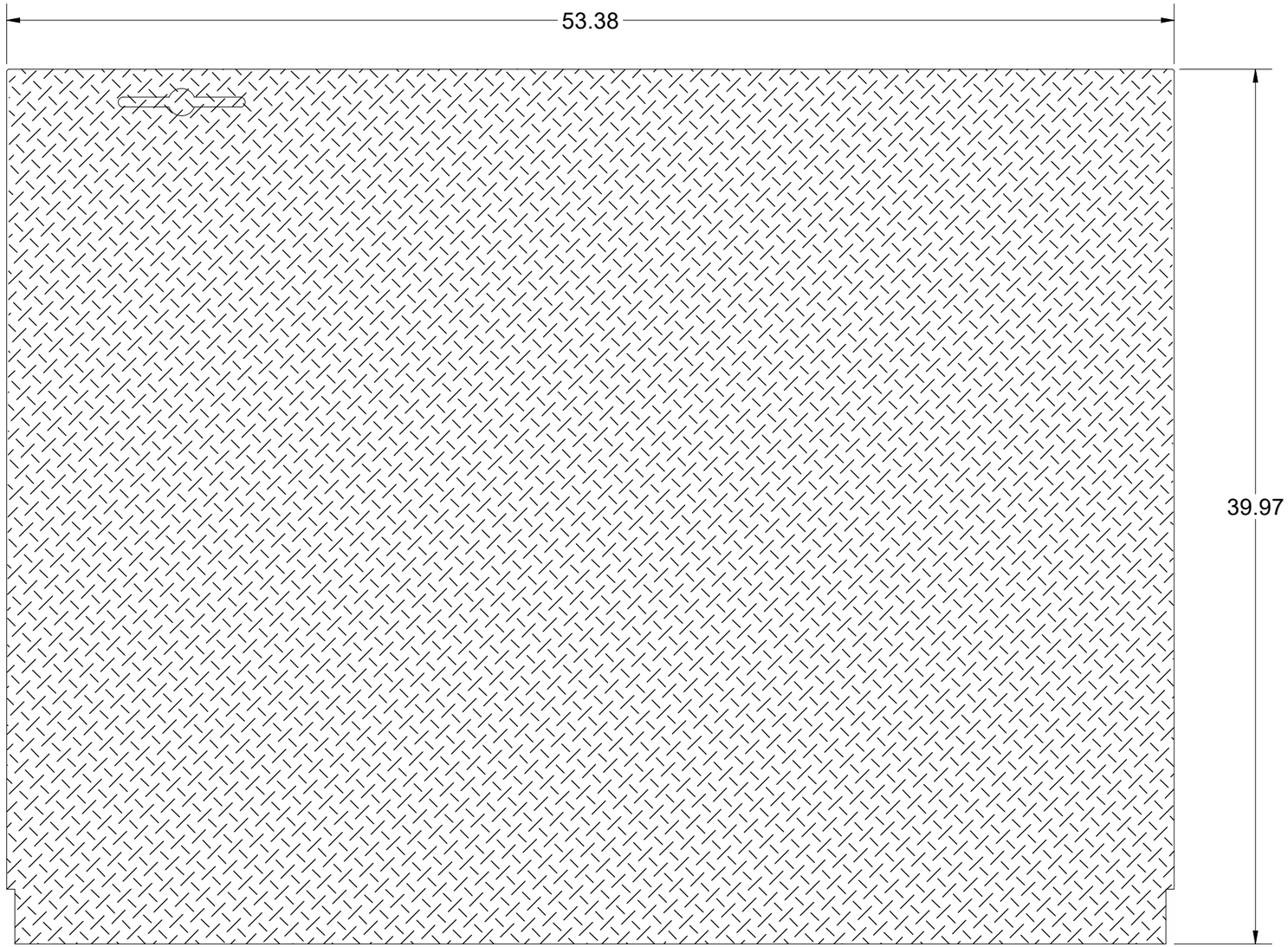

20007017 9.idw

BEND TABLE				MATERIAL IFS: 100007736
BEND RADIUS	V-OPENING	BEND ANGLE	BEND DEDUCTION	MATERIAL THK: 0.25
-	-	-	-	MAT DESCRIPTION: SHT STL CQ DP RAW .25 - 36 KSI YIELD

JENSEN METALTECH
450 E. GLENDALE AVE. SPARKS. NV 89431
775-352-2716 FAX: 755-358-8127
JENSENMETALTECH.COM

©2023 Jensen Precast- All rights reserved.
All materials appearing as Jensen Precast documents and the like are proprietary work product and are protected under U.S. copyright and other laws.
Unless in conjunction with business conducted with Jensen Precast, any use of Jensen Precast work product without express, written consent is prohibited, and recipient is prohibited from distributing any and all work product to non-approved third parties under penalty of civil action.

NAME & DESCRIPTION:	200054126 Door Component Steel Plate, Bottom		REV: A
WEIGHT: 166.426 lbmass		DRAWN BY: M. Newman	SHEET: 10 OF 15
CREATED: 11/12/2018		MODIFIED: 3/29/2023	

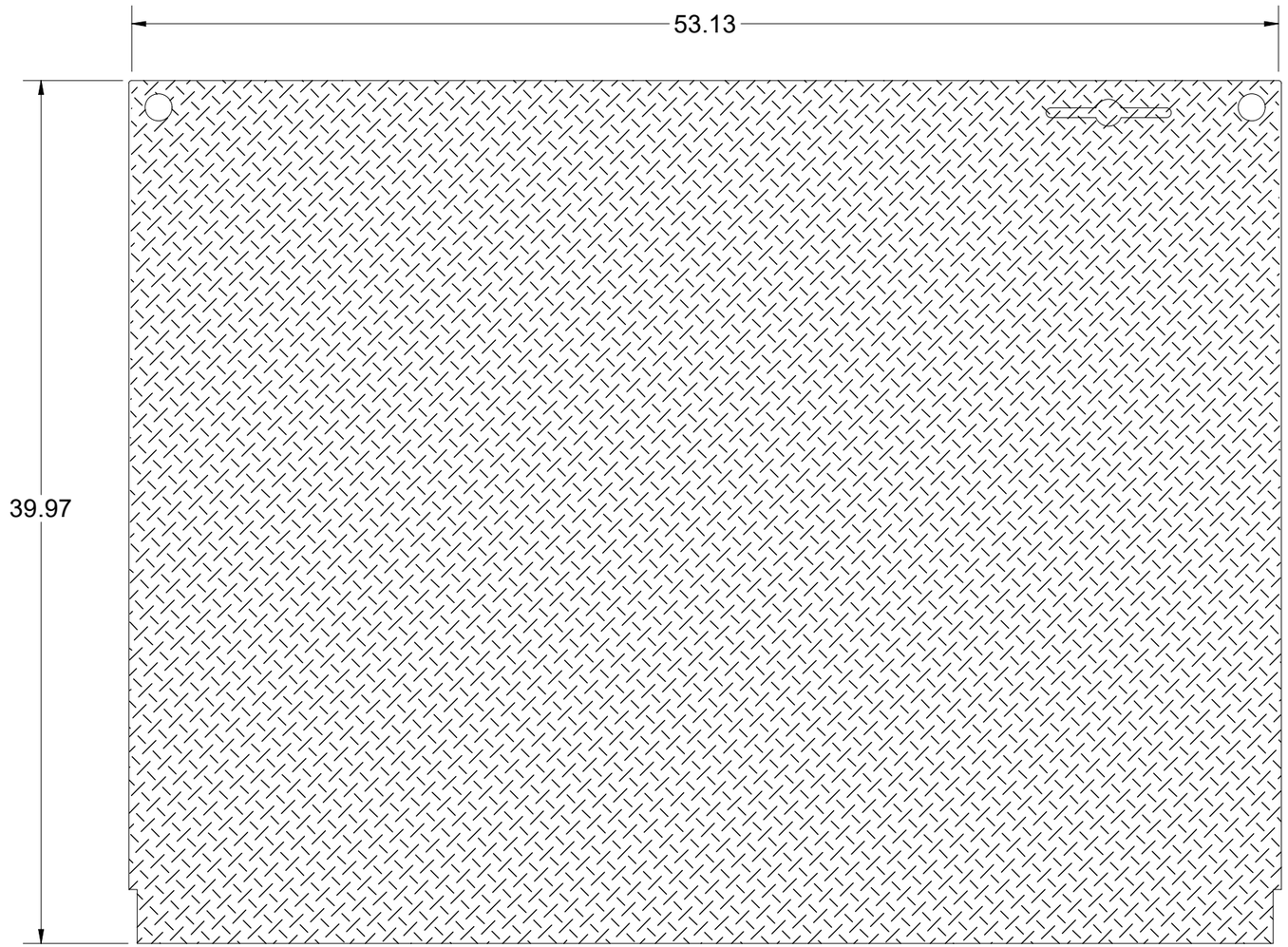

20007017 9.idw

BEND TABLE				MATERIAL IFS: 100007736			
BEND RADIUS	V-OPENING	BEND ANGLE	BEND DEDUCTION	MATERIAL THK: 0.25			
-	-	-	-	MAT DESCRIPTION: SHT STL CQ DP RAW .25 - 36 KSI YIELD			

JENSEN METALTECH
450 E. GLENDALE AVE. SPARKS. NV 89431
775-352-2716 FAX: 755-358-8127
JENSENMETALTECH.COM

©2023 Jensen Precast- All rights reserved.
All materials appearing as Jensen Precast documents and the like are proprietary work product and are protected under U.S. copyright and other laws.
Unless in conjunction with business conducted with Jensen Precast, any use of Jensen Precast work product without express, written consent is prohibited, and recipient is prohibited from distributing any and all work product to non-approved third parties under penalty of civil action.

NAME & DESCRIPTION: 200054128 Door Component Steel Plate, Top		REV: A
WEIGHT: 166.234 lbmass	DRAWN BY: M. Newman	SHEET: 11 OF 15
CREATED: 11/12/2018	MODIFIED: 3/29/2023	

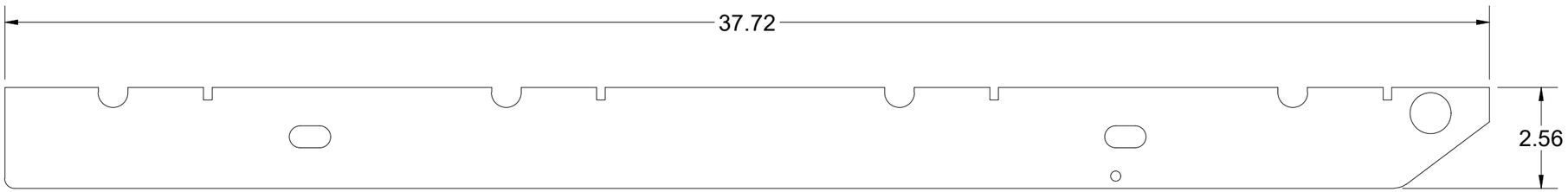

BEND TABLE				MATERIAL IFS: 100007821				
BEND RADIUS	V-OPENING	BEND ANGLE	BEND DEDUCTION	MATERIAL THK: 0.1875				
-	-	-	-	MAT DESCRIPTION: SHT STL GR80 SM-HRPO RAW .1875				

JENSEN METALTECH
450 E. GLENDALE AVE. SPARKS. NV 89431
775-352-2716 FAX: 755-358-8127
JENSENMETALTECH.COM

©2023 Jensen Precast- All rights reserved.
All materials appearing as Jensen Precast documents and the like are proprietary work product and are protected under U.S. copyright and other laws.
Unless in conjunction with business conducted with Jensen Precast, any use of Jensen Precast work product without express, written consent is prohibited, and recipient is prohibited from distributing any and all work product to non-approved third parties under penalty of civil action.

NAME & DESCRIPTION: 200054125 Door Component Steel Side Bar		REV: B
WEIGHT: 4.847 lbmass	DRAWN BY: M. Newman	SHEET: 12 OF 15
CREATED: 11/12/2018	MODIFIED: 3/29/2023	

20007017 9.idw

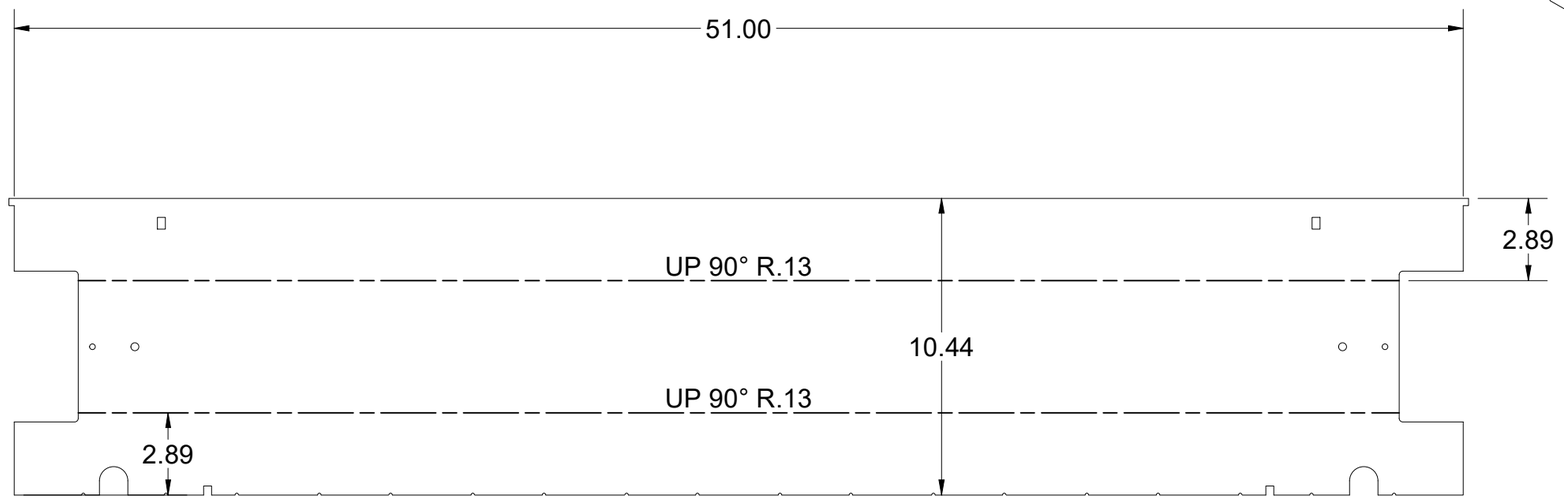

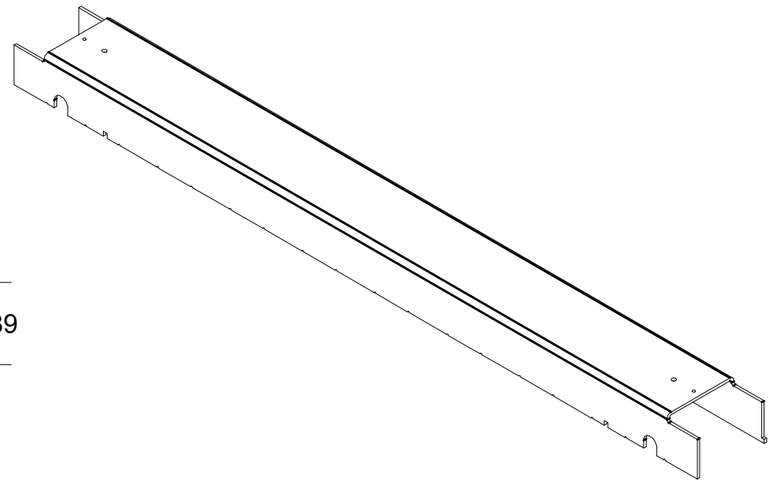

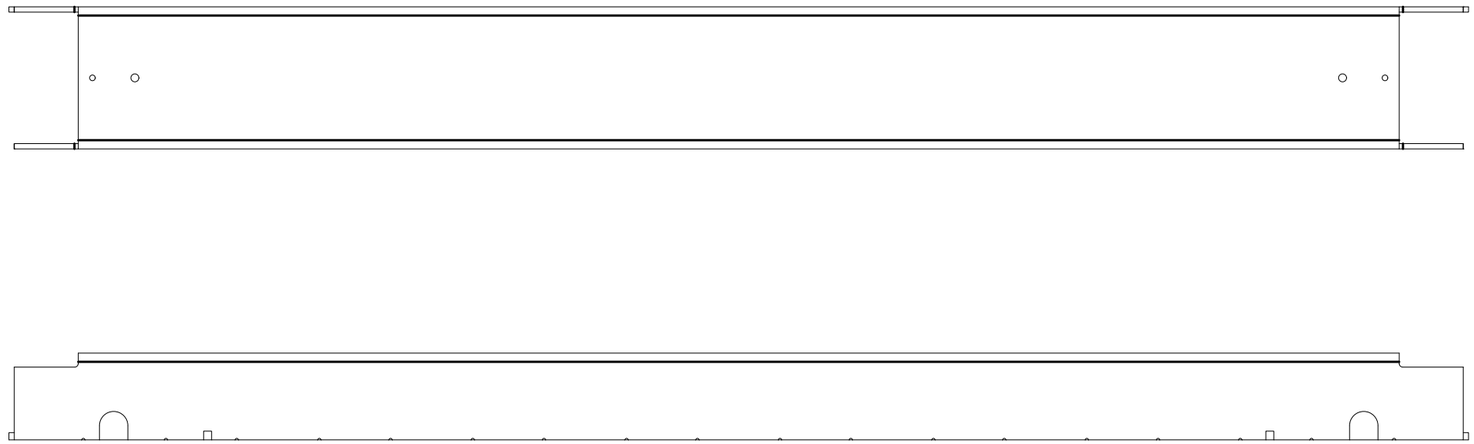

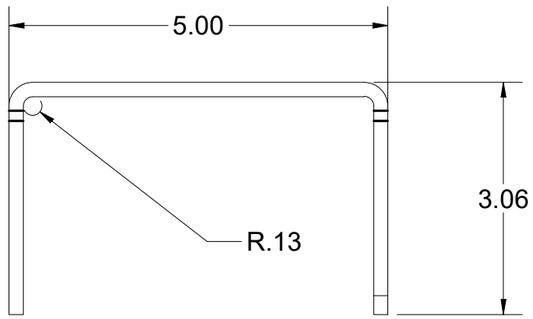

BEND TABLE				MATERIAL IFS: 100007821
BEND RADIUS	V-OPENING	BEND ANGLE	BEND DEDUCTION	MATERIAL THK: 0.1875
0.125	2	90	0.345	MAT DESCRIPTION: SHT STL GR80 SM-HRPO RAW .1875

JENSEN METALTECH
450 E. GLENDALE AVE. SPARKS. NV 89431
775-352-2716 FAX: 755-358-8127
JENSENMETALTECH.COM

©2023 Jensen Precast- All rights reserved.
All materials appearing as Jensen Precast documents and the like are proprietary work product and are protected under U.S. copyright and other laws.
Unless in conjunction with business conducted with Jensen Precast, any use of Jensen Precast work product without express, written consent is prohibited, and recipient is prohibited from distributing any and all work product to non-approved third parties under penalty of civil action.

NAME & DESCRIPTION:	200054123 Door Component Steel Channel		REV: B
WEIGHT: 27.217 lbmass		DRAWN BY: M. Newman	SHEET: 13 OF 15
CREATED: 11/12/2018		MODIFIED: 3/29/2023	

200070179.idw

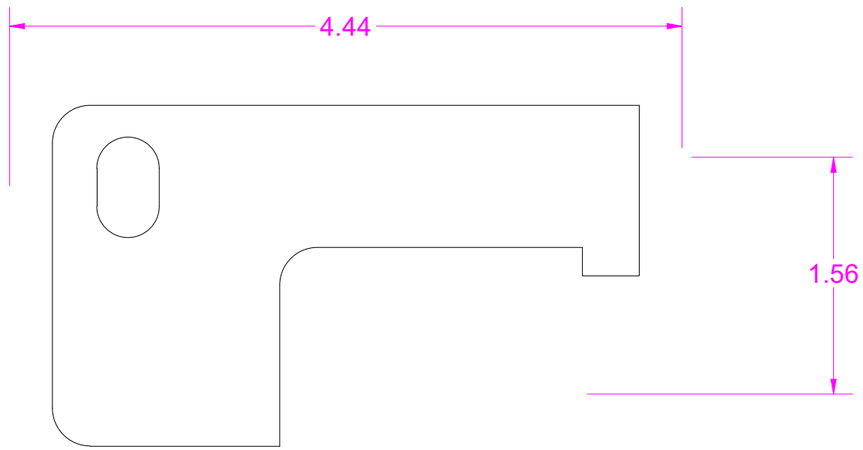

BEND TABLE				MATERIAL IFS: 100007735			
BEND RADIUS	V-OPENING	BEND ANGLE	BEND DEDUCTION	MATERIAL THK: 0.25			
-	-	-	-	MAT DESCRIPTION: STL ASTM A36 SM-HRPO RAW .250			

JENSEN METALTECH
450 E. GLENDALE AVE. SPARKS. NV 89431
775-352-2716 FAX: 755-358-8127
JENSENMETALTECH.COM

©2023 Jensen Precast- All rights reserved.
All materials appearing as Jensen Precast documents and the like are proprietary work product and are protected under U.S. copyright and other laws.
Unless in conjunction with business conducted with Jensen Precast, any use of Jensen Precast work product without express, written consent is prohibited, and recipient is prohibited from distributing any and all work product to non-approved third parties under penalty of civil action.

NAME & DESCRIPTION:	200057113 CUSTOM GAS SPRING DOOR MOUNT		REV: A-3
WEIGHT: 0.385 lbmass	DRAWN BY: M. Newman		SHEET: 14 OF 15
CREATED: 1/25/2019	MODIFIED: 3/29/2023		

200070179.idw

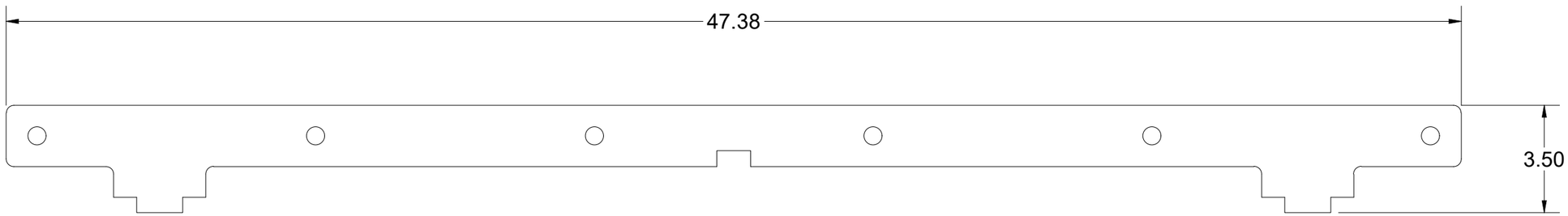

BEND TABLE				MATERIAL IFS: 100007735				
BEND RADIUS	V-OPENING	BEND ANGLE	BEND DEDUCTION	MATERIAL THK: 0.25				
-	-	-	-	MAT DESCRIPTION: STL ASTM A36 SM-HRPO RAW .250				

JENSEN METALTECH
450 E. GLENDALE AVE. SPARKS. NV 89431
775-352-2716 FAX: 755-358-8127
JENSENMETALTECH.COM

©2023 Jensen Precast- All rights reserved.
All materials appearing as Jensen Precast documents and the like are proprietary work product and are protected under U.S. copyright and other laws.
Unless in conjunction with business conducted with Jensen Precast, any use of Jensen Precast work product without express, written consent is prohibited, and recipient is prohibited from distributing any and all work product to non-approved third parties under penalty of civil action.

NAME & DESCRIPTION: 200013208 Door Component Steel Lap Bar 48in		REV: D-2
WEIGHT: 7.099 lbmass	DRAWN BY: M. Newman	SHEET: 15 OF 15
CREATED: 7/21/2020	MODIFIED: 3/29/2023	

200070179.idw