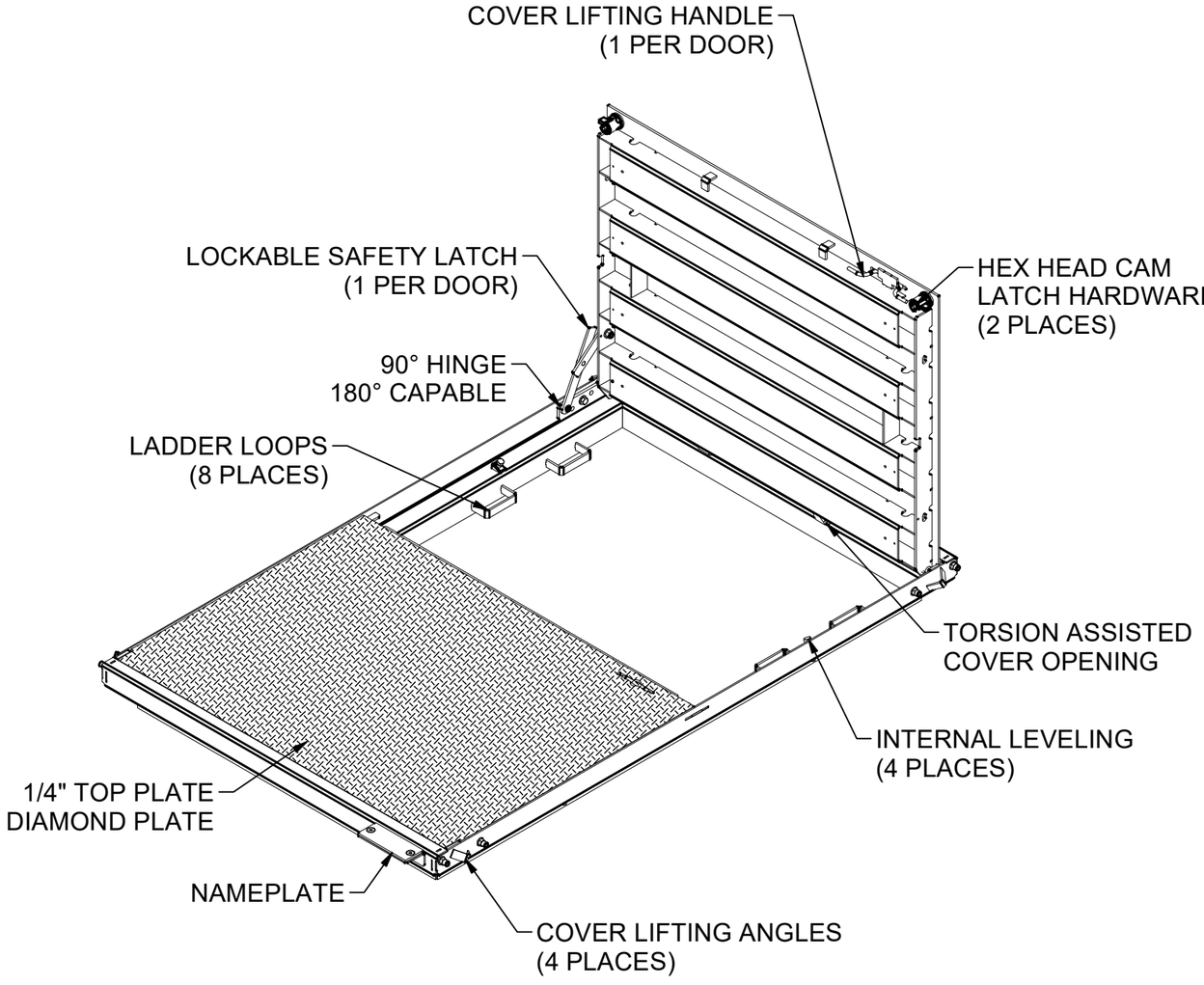

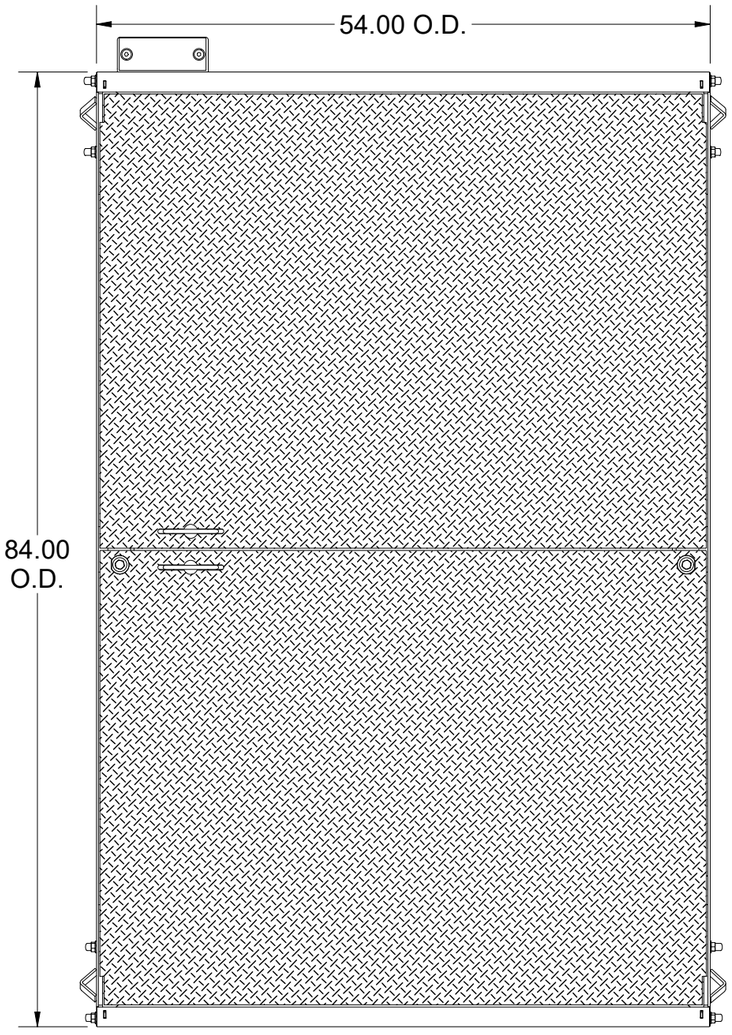

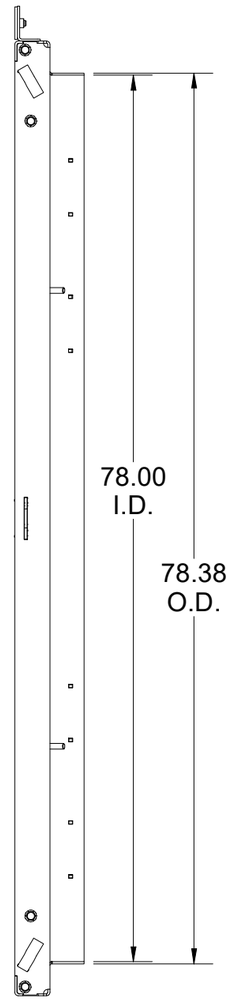

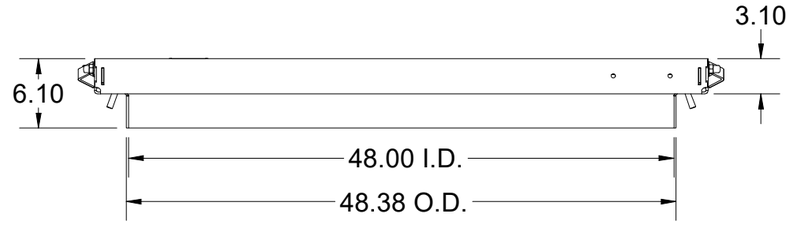

100002322.idw

*DESIGNED FOR ROBOT WELDING

LOADING CRITERIA: ASTM C1802 Load Level 04

16,000 lb load on 10" x 20" footprint, without impact restricted to parking spaces and areas within close proximity of roadways.

SURFACE:	Diamond Plate	FINISH:	Galvanized
WEIGHT:	757.86 lbs	MARKING:	None

Infrastructure
JENSEN
527 Dunn Circle, Sparks, NV 89431
775-352-2716 FAX: 755-358-8127
JENSENMETALTECH.COM

©2026 Jensen Infrastructure - All rights reserved.
All materials appearing as Jensen Infrastructure documents and the like are proprietary work product and are protected under U.S. copyright and other laws. Unless in conjunction with business conducted with Jensen Infrastructure , any use of Jensen Infrastructure work product without express, written consent is prohibited, and recipient is prohibited from distributing any and all work product to non-approved third parties under penalty of civil action.
This product shall only be produced in a Jensen Infrastructure facility.

DESCRIPTION:	CAS2-4979-AH4-DP-G-CL-LL-SP-NVE-OH06 49x79 Standard Cover Assembly (ASTM C1802 Load Level 04, Steel, Hinged, Handle (1 Per Door), Diamond Plate, Galvanized, Ladder Loops, NV Energy) 06	REV:	D-3
PART NUMBER:	100002322	DRAWN BY:	C. Heywood
CREATED:	2/13/2020	MODIFIED:	8/31/2026
		SHEET:	1

BILL OF MATERIALS

ITEM	ITEM QTY	QTY	PART NUMBER	DESCRIPTION	PART NAME
1	1	1	200036028	FAS-4979-AH4-R-LL-SP-NVE-OH06	200036028
2	1	1	200036020	DAS2-B-4979-H4-DP-R-CL-SP-NVE	200036020
3	1	1	200036026	DAS2-T-4979-H4-DP-R-CL-SP-NVE	200036026
4	8	8	100026256	LOW-STRENGTH STEEL FLANGE NUT, 1/2" - 13 THREAD SIZE	100026256
5	8	8	100011418	WASHER FLAT 1/2 NARROW ZINC	100011418
6	2	2	100011407	Hex Bolt 1/2-13 UNC ZINC - PT - 2.25"	100011407
7	8	8	100007939	CAP VINYL .467 X 1/2	100007939
8	2	2	100007933	SAFETY LATCH ASSY FOR UNI AND 90 D HINGE	100007933
9	2	2	100007924	LANYARD 3/64 W/PIN COATED SS	100007924
10	2	2	100007918	COTTER PIN 0.094DIA X 1-1/4	100007918
11	2	2	100007915	SPRING COMPRESSION 055 X 5/8 X 7/8 LONG	100007915
12	2	2	100007882	RIVET GRIP STEEL 3/16 X 7/16 LRG HD	100007882
13	2	2	100007876	Bolt Shoulder Socket Head - 3/8-16 UNC - SD-0.5" - SL-0.3125" - Grade 5 - Zinc	100007876
14	8	8	100007873	BOLT SOCKET CAP - 3/8-16 UNC - 1.25 - ZINC	100007873
15	4	4	100007869	BOLT SOCKET CAP - 1/2-13 UNC - 1.75 - 316SS	100007869
16	8	8	100007859	RIVET NUT 3/8-16 FLAT KNURLED	100007859
17	2	2	100007857	NUT FINGER 1/2-13 BRASS	100007857
18	2	2	100007733	BOLT HEX SOCKET FLAT COUNTERSUNK HEAD 1/2-13 UNC 1 GR 5 ZINC-PLATED	100007733
19	2	2	100007729	HEX NUT SLOTTED CASTLE HEAD 1/2-13 SS	100007729
20	4	4	100007727	TORSION HEX ROD .5 x 36in RAW	100007727
21	2	2	100007681	Offset Sprint Mount, 1/2"	100007681
22	2	2	100007671	SPRING MOUNT ASSY .500	100007671
23	2	2	100007660	Hinge Assembly, Right, 1/2, Steel	100007660
24	2	2	100007659	Hinge Assembly, Left, 1/2, Steel	100007659
25	2	2	100007492	HEX NUT NYLOCK - 1/2-13 UNC - GR5 - ZINC	100007492
26	1	1	100007391	NAME PLATE STEEL - BLANK	100007391
27	4	4	100005059	BOLT HEX 1/2-13 UNC 2.5 ZINC	100005059
28	4	4	100003823	Hex Bolt 1/2-13 UNC ZINC - PT - 1.5"	100003823

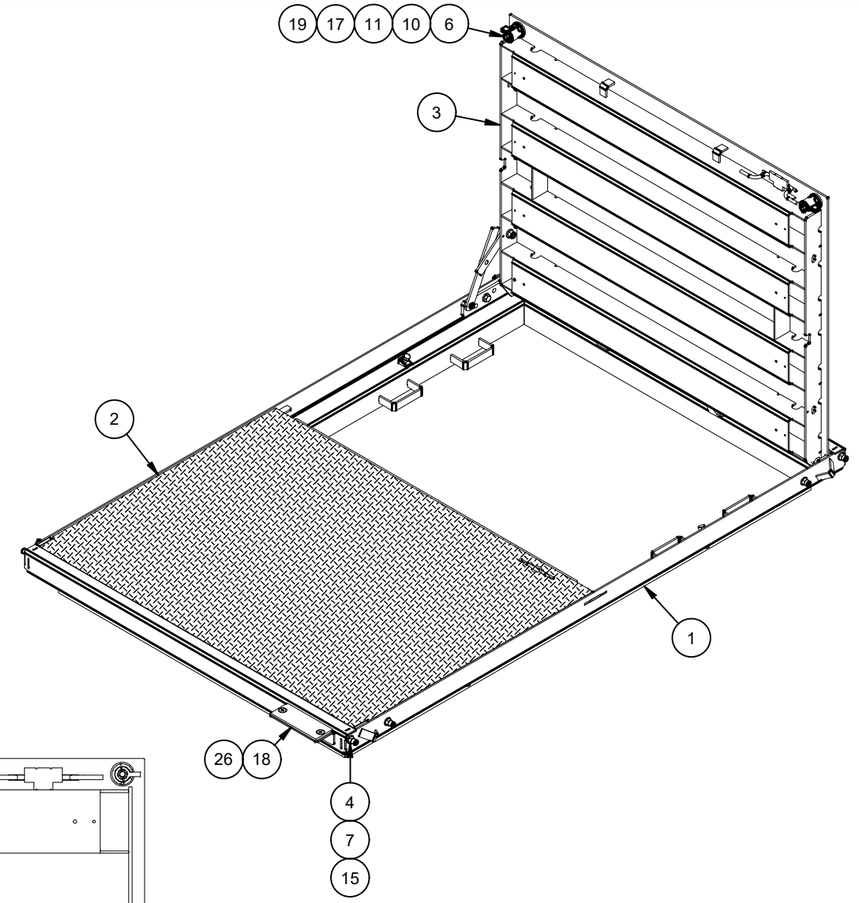

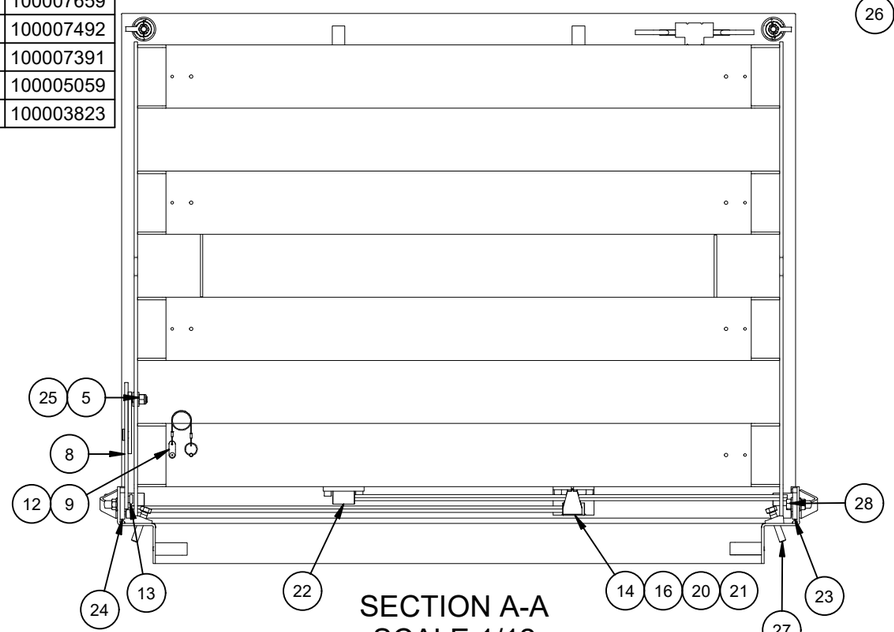

SECTION A-A
SCALE 1/12

100002322.idw

REVISION HISTORY		
DESCRIPTION	DATE	REVISED BY
59752-9: FINSIHED SHOP DRAWINGS	6/08/2026	C. HEYWOOD
61410-6: UPDATED BOMS AND PRINT. UPDATED CATCH PLATES.	8/28/2026	C. HEYWOOD
60627-1 ADDED .1 IN TO FRAME HEIGHT	8/31/2026	M. BOUCHARD

MATERIAL FINISH: Galvanized

MATERIAL SURFACE: Diamond Plate

Infrastructure
JENSEN

527 Dunn Circle, Sparks, NV 89431
775-352-2716 FAX: 755-358-8127
JENSENMETALTECH.COM

©2026 Jensen Infrastructure - All rights reserved.
All materials appearing as Jensen Infrastructure documents and the like are proprietary work product and are protected under U.S. copyright and other laws. Unless in conjunction with business conducted with Jensen Infrastructure , any use of Jensen Infrastructure work product without express, written consent is prohibited, and recipient is prohibited from distributing any and all work product to non-approved third parties under penalty of civil action.
This product shall only be produced in a Jensen Infrastructure facility.

PART NUMBER & DESCRIPTION: 100002322
CAS2-4979-AH4-DP-G-CL-LL-SP-NVE-OH06

REV: D-3

WEIGHT: 757.86 Lbs

DRAWN BY: C. Heywood

SHEET: 2

CREATED: 2/13/2020

MODIFIED: 8/31/2026

BURN LIST - BOM

PART NAME	ITEM QTY	QTY	DESCRIPTION	STOCK NUMBER	MATERIAL	MASS	SHEET
200036023	4	25.307 lbmass	Door Component Steel Side Bar	100007735	STL ASTM A36 SM-HRPO RAW .250	6.327 lbmass	07
200036024	1	166.426 lbmass	Door Component Steel Plate, Bottom	100007736	SHT STL CQ DP RAW .25 - 36 KSI YIELD	166.426 lbmass	08
200036025	8	220.596 lbmass	Door Component Steel Channel	100007821	SHT STL GR80 SM-HRPO RAW .1875	27.123 lbmass	09
200036027	1	166.096 lbmass	Door Component Steel Plate, Top	100007736	SHT STL CQ DP RAW .25 - 36 KSI YIELD	166.096 lbmass	10
200036029	2	55.463 lbmass	Frame Component Steel Frame End, Adjustable Ladder Loops	100007734	STL ASTM A36 SM-HRPO 60X120 RAW .1875	27.731 lbmass	11
200036030	2	74.411 lbmass	Frame Component Steel Frame Side, Adjustable Ladder Loops	100007734	STL ASTM A36 SM-HRPO 60X120 RAW .1875	37.205 lbmass	12
200087252	1	6.293 lbmass	Door Component Steel Lap Bar 48in, 2.5" Stiffener Offset	100007735	STL ASTM A36 SM-HRPO RAW .250	6.293 lbmass	13
200117297	4	2.626 lbmass	Anti-Distortion Member	100007821	SHT STL GR80 SM-HRPO RAW .1875	0.656 lbmass	14

100002322.idw

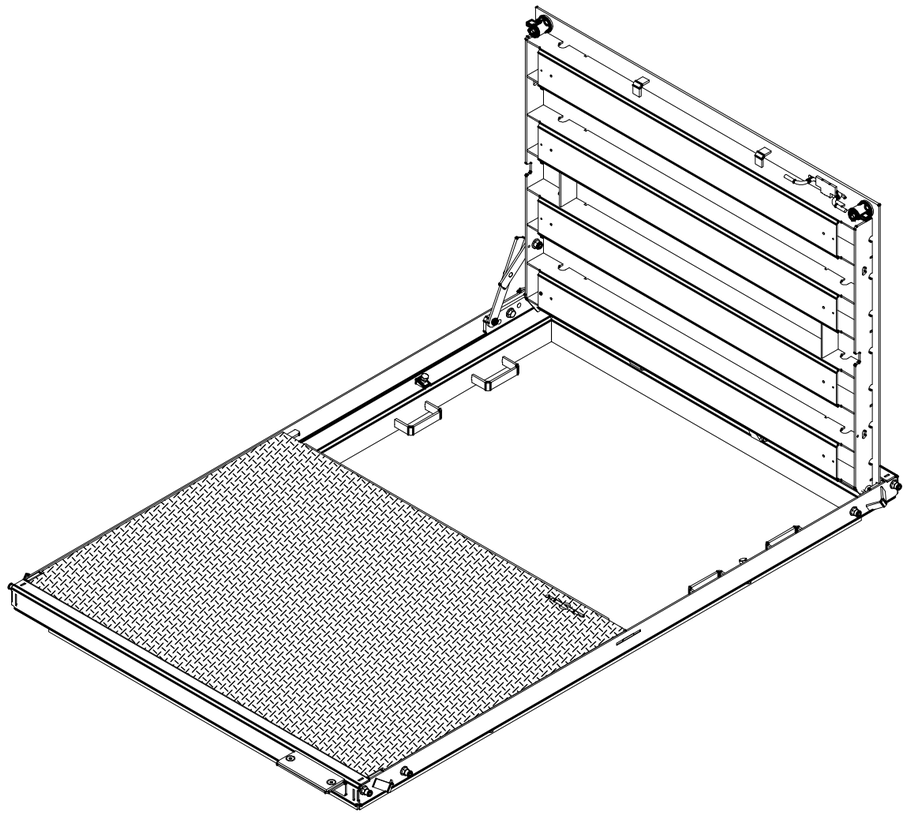

MATERIAL FINISH: Galvanized

MATERIAL SURFACE: Diamond Plate

Infrastructure JENSEN
527 Dunn Circle, Sparks, NV 89431
775-352-2716 FAX: 755-358-8127
JENSENMETALTECH.COM

©2026 Jensen Infrastructure - All rights reserved.
All materials appearing as Jensen Infrastructure documents and the like are proprietary work product and are protected under U.S. copyright and other laws. Unless in conjunction with business conducted with Jensen Infrastructure , any use of Jensen Infrastructure work product without express, written consent is prohibited, and recipient is prohibited from distributing any and all work product to non-approved third parties under penalty of civil action.
This product shall only be produced in a Jensen Infrastructure facility.

PART NUMBER & DESCRIPTION: 100002322
CAS2-4979-AH4-DP-G-CL-LL-SP-NVE-OH06

REV: D-3

WEIGHT: 757.86 Lbs

DRAWN BY: C. Heywood

SHEET: 3

CREATED: 2/13/2020

MODIFIED: 8/31/2026

BILL OF MATERIALS

ITEM	ITEM QTY	QTY	PART NUMBER	DESCRIPTION	PART NAME
1	1	166.096 lbmass	100007736	Door Component Steel Plate, Top	200036027
2	4	110.298 lbmass	100007821	Door Component Steel Channel	200036025
3	2	12.653 lbmass	100007735	Door Component Steel Side Bar	200036023
4	2	1.313 lbmass	100007821	Anti-Distortion Member	200117297
5	2	2	100007970	CAM TOWER CAST STEEL	100007970
6	2	2	100007647	LIFTING BRACKET STEEL LEAF	100007647
7	1	1	100007646	HANDLE RETAINER STL	100007646
8	1	1	100007644	LEAF PULL HANDLE A36 3/8IN DIAMETER	100007644

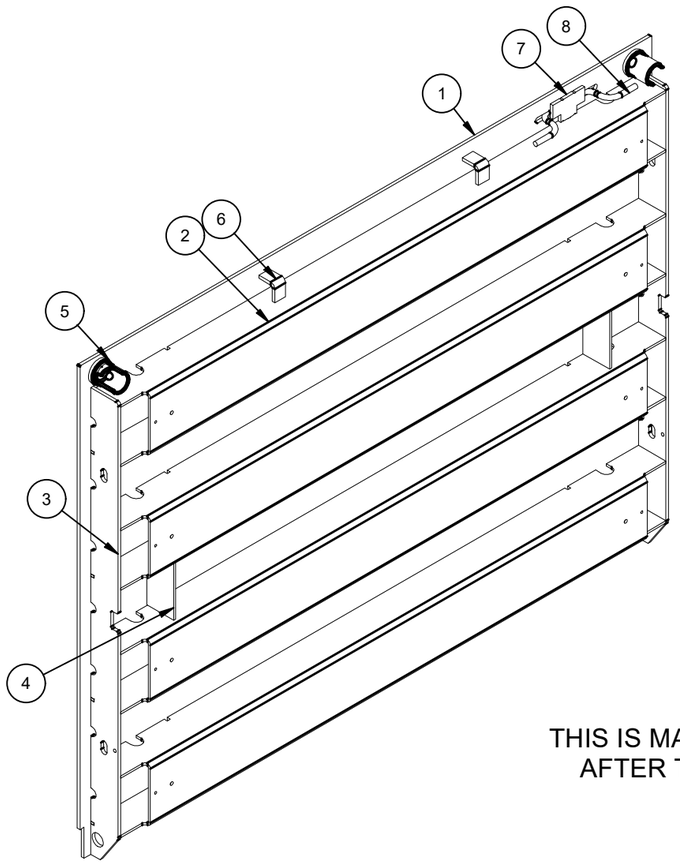

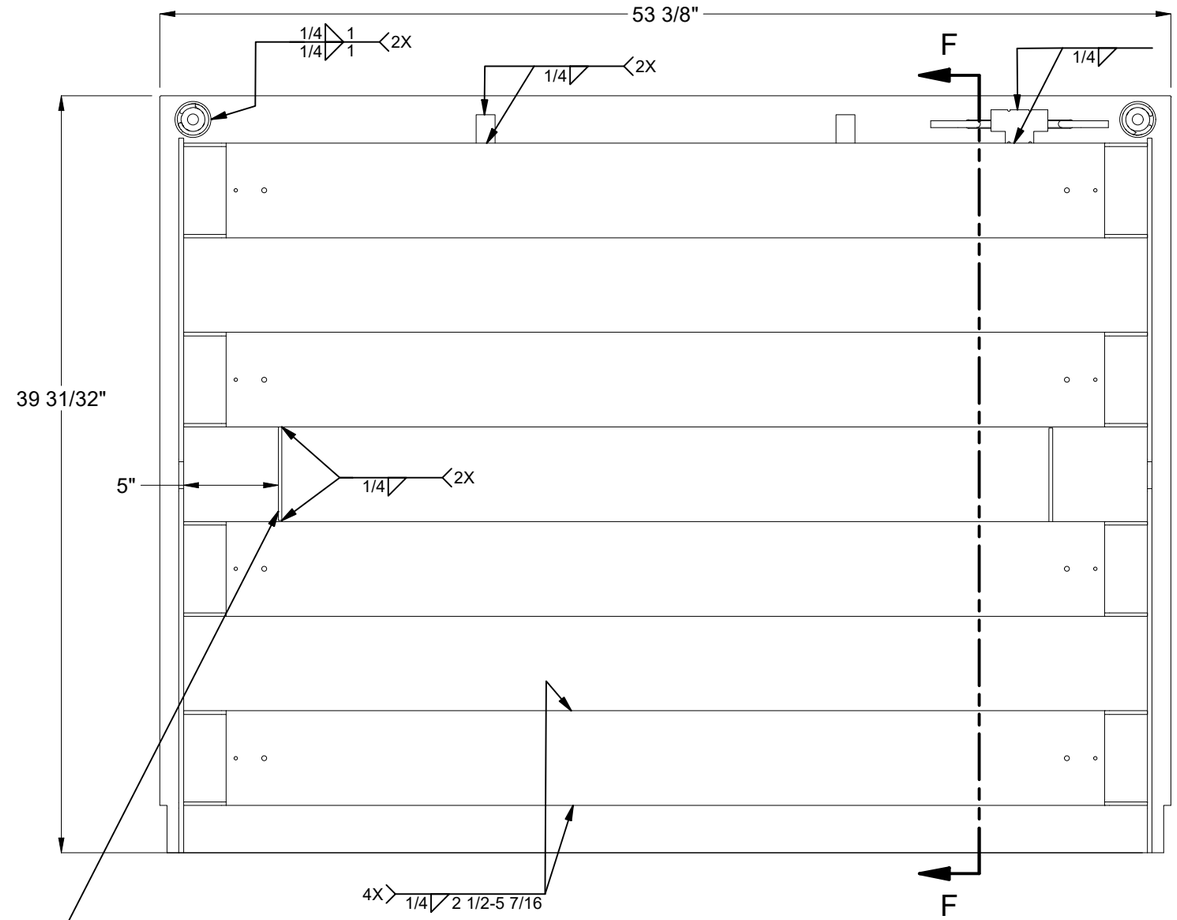

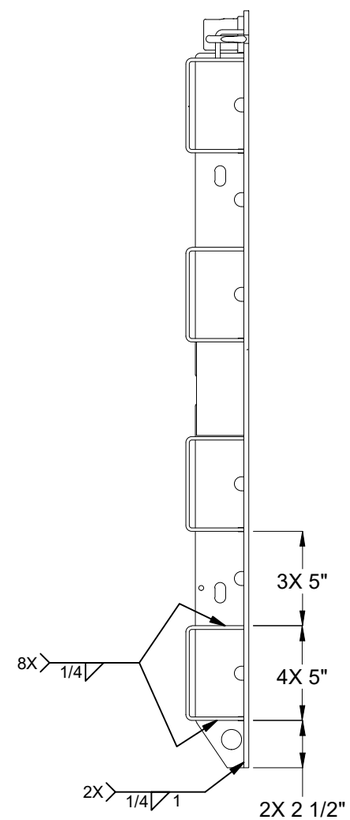

SECTION F-F

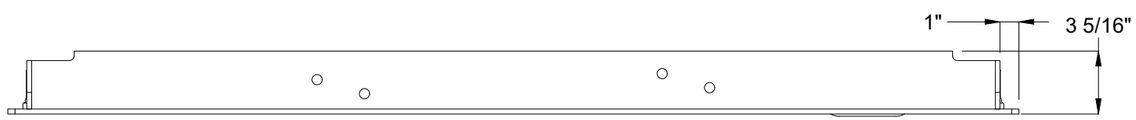

MATERIAL FINISH: Raw	Infrastructure JENSEN 527 Dunn Circle, Sparks, NV 89431 775-352-2716 FAX: 755-358-8127 *JENSENMETALTECH.COM*	©2026 Jensen Infrastructure - All rights reserved. All materials appearing as Jensen Infrastructure documents and the like are proprietary work product and are protected under U.S. copyright and other laws. Unless in conjunction with business conducted with Jensen Infrastructure , any use of Jensen Infrastructure work product without express, written consent is prohibited, and recipient is prohibited from distributing any and all work product to non-approved third parties under penalty of civil action. This product shall only be produced in a Jensen Infrastructure facility.	PART NUMBER & DESCRIPTION: 200036026 DAS2-T-4979-H4-DP-R-CL-SP-NVE
MATERIAL SURFACE: Diamond Plate			WEIGHT: 290.58 Lbs DRAWN BY: C. Heywood CREATED: 2/13/2020 MODIFIED: 8/31/2026

REV: D-3

SHEET: 4

100002322.idw

BILL OF MATERIALS

ITEM	ITEM QTY	QTY	PART NUMBER	DESCRIPTION	PART NAME
1	4	110.298 lbmass	100007821	Door Component Steel Channel	200036025
2	1	166.426 lbmass	100007736	Door Component Steel Plate, Bottom	200036024
3	2	12.653 lbmass	100007735	Door Component Steel Side Bar	200036023
4	1	6.293 lbmass	100007735	Door Component Steel Lap Bar 48in, 2.5" Stiffener Offset	200087252
5	2	1.313 lbmass	100007821	Anti-Distortion Member	200117297
6	2	2	100007647	LIFTING BRACKET STEEL LEAF	100007647
7	1	1	100007644	LEAF PULL HANDLE A36 3/8IN DIAMETER	100007644

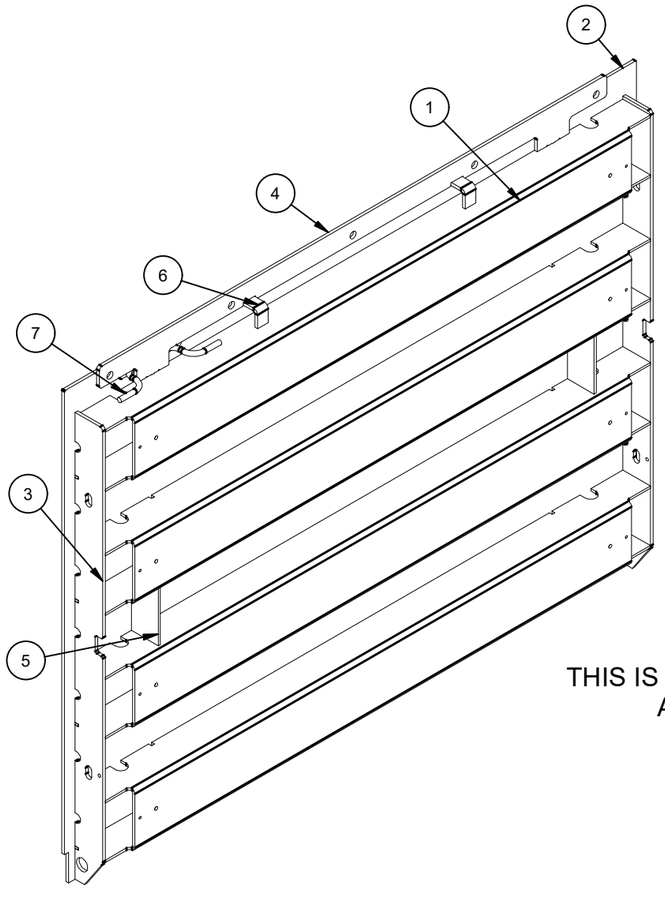

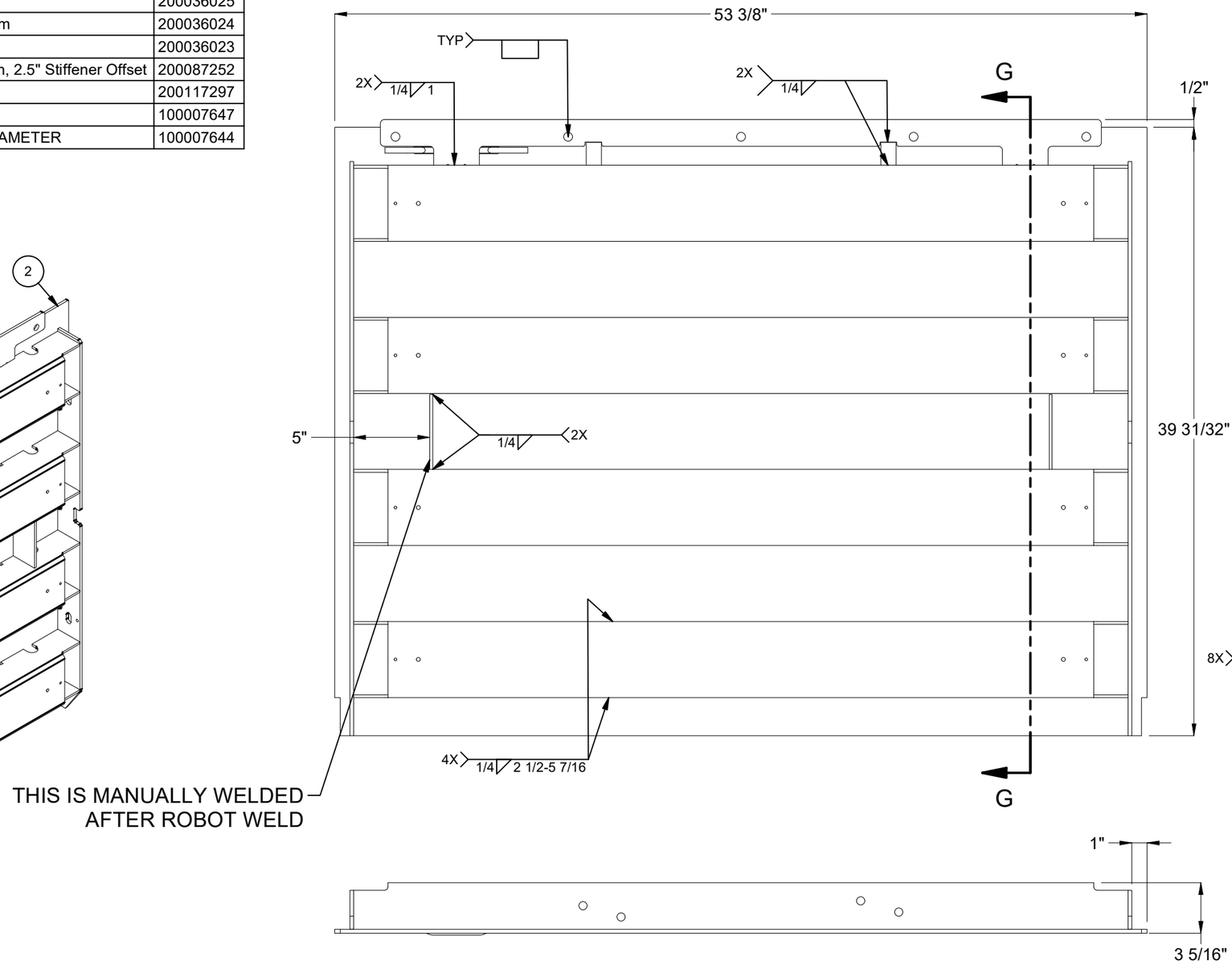

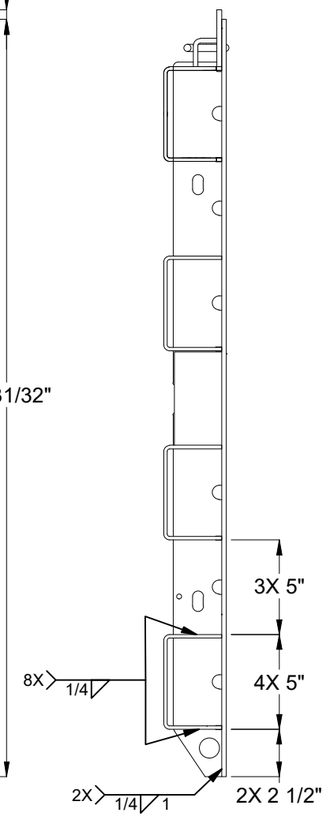

SECTION G-G

100002322.idw

MATERIAL FINISH: Raw	Infrastructure JENSEN 527 Dunn Circle, Sparks, NV 89431 775-352-2716 FAX: 755-358-8127 *JENSENMETALTECH.COM*	©2026 Jensen Infrastructure - All rights reserved. All materials appearing as Jensen Infrastructure documents and the like are proprietary work product and are protected under U.S. copyright and other laws. Unless in conjunction with business conducted with Jensen Infrastructure , any use of Jensen Infrastructure work product without express, written consent is prohibited, and recipient is prohibited from distributing any and all work product to non-approved third parties under penalty of civil action. This product shall only be produced in a Jensen Infrastructure facility.	PART NUMBER & DESCRIPTION: 200036020 DAS2-B-4979-H4-DP-R-CL-SP-NVE REV: D-3
MATERIAL SURFACE: Diamond Plate			WEIGHT: 295.87 Lbs DRAWN BY: C. Heywood CREATED: 2/13/2020 MODIFIED: 8/31/2026 SHEET: 5

BILL OF MATERIALS

ITEM	ITEM QTY	QTY	PART NUMBER	DESCRIPTION	PART NAME
1	2	74.411 lbmass	100007734	Frame Component Steel Frame Side, Adjustable Ladder Loops	200036030
2	2	55.463 lbmass	100007734	Frame Component Steel Frame End, Adjustable Ladder Loops	200036029
3	4	4	200018691	FRAME BOLT DOUBLER SLOT	200018691
4	2	2	200100755	Frame Cam Latch Catch Plate - 1/4" A36, Dual Door, 0.8125" Overhang	200100755
5	4	4	100007863	NUT LEVELER 1/2-13 WELDABLE CAST STEEL	100007863
6	2	2	100007728	NUT SELF-CLINCH 1/2-13 S-0813-1 RAW	100007728
7	8	8	100007683	Ladder Loop - Standard, Steel	100007683
8	1	1	100007667	NAME PLATE FRAME ANGLE	100007667
9	4	4	100007641	FRAME LIFTING BRACKET	100007641

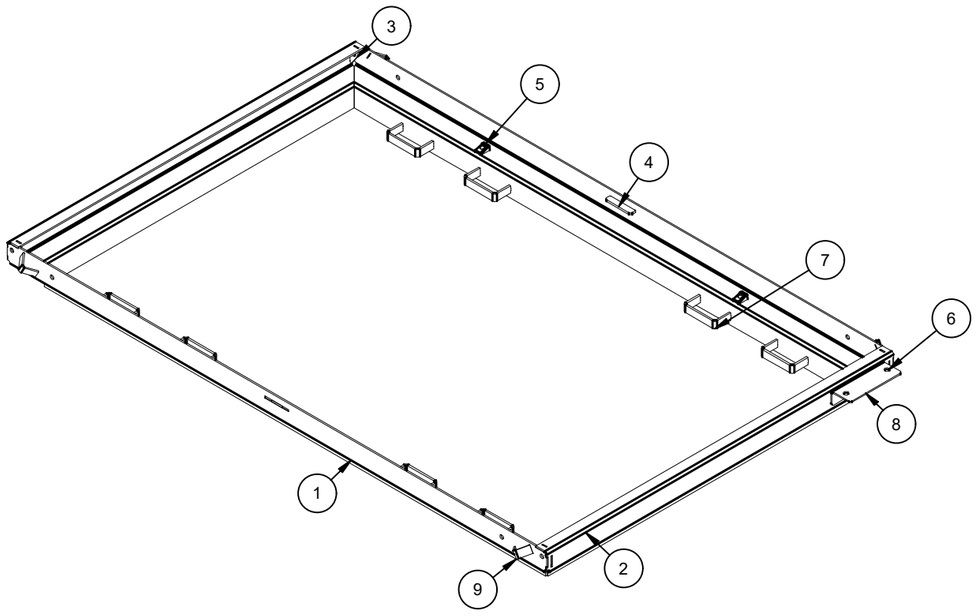

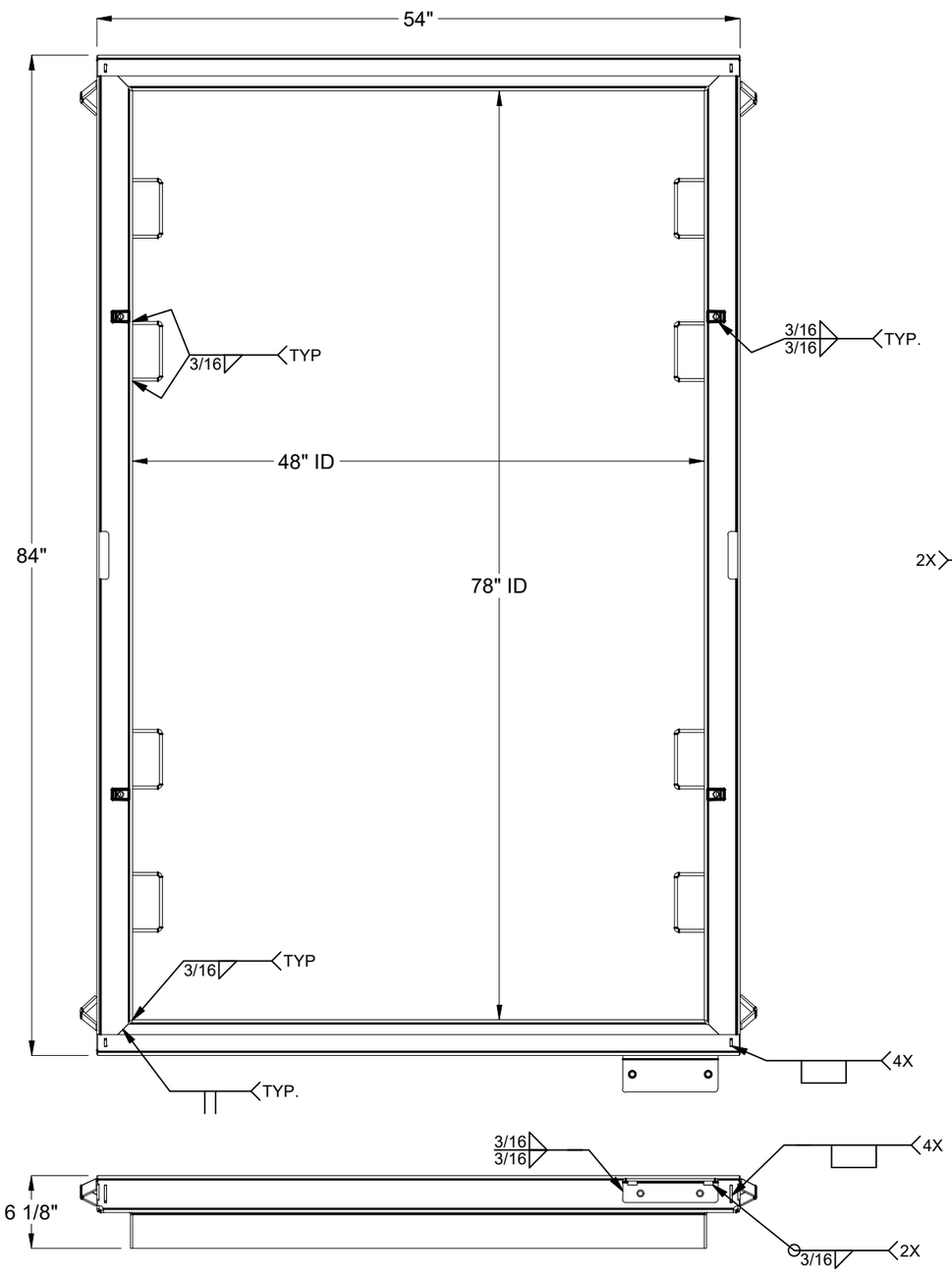

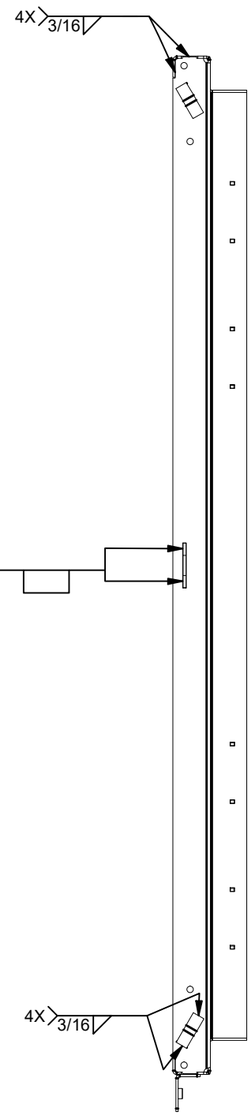

100002322.idw

MATERIAL FINISH: Raw	Infrastructure JENSEN 527 Dunn Circle, Sparks, NV 89431 775-352-2716 FAX: 755-358-8127 *JENSENMETALTECH.COM*	©2026 Jensen Infrastructure - All rights reserved. All materials appearing as Jensen Infrastructure documents and the like are proprietary work product and are protected under U.S. copyright and other laws. Unless in conjunction with business conducted with Jensen Infrastructure , any use of Jensen Infrastructure work product without express, written consent is prohibited, and recipient is prohibited from distributing any and all work product to non-approved third parties under penalty of civil action. This product shall only be produced in a Jensen Infrastructure facility.	PART NUMBER & DESCRIPTION: 200036028 FAS-4979-AH4-R-LL-SP-NVE-OH06	REV: D-3
MATERIAL SURFACE: Smooth			WEIGHT: 140 Lbs DRAWN BY: C. Heywood CREATED: 2/13/2020 MODIFIED: 8/31/2026	SHEET: 6

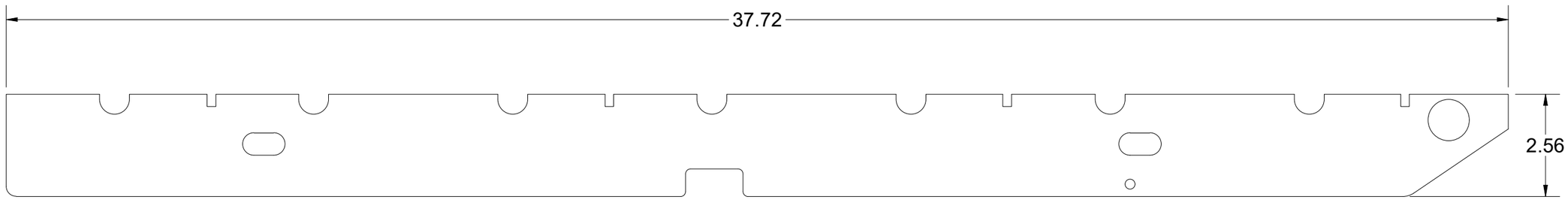

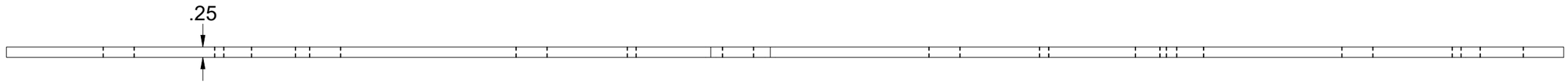

BEND TABLE				MATERIAL IFS: 100007735
BEND RADIUS	V-OPENING	BEND ANGLE	BEND DEDUCTION	MATERIAL THK: 0.25
-	-	- 0	-	MAT DESCRIPTION: STL ASTM A36 SM-HRPO RAW .250

Infrastructure
JENSEN
527 Dunn Circle, Sparks, NV 89431
775-352-2716 FAX: 755-358-8127
JENSENMETALTECH.COM

©2026 Jensen Infrastructure - All rights reserved.
All materials appearing as Jensen Infrastructure documents and the like are proprietary work product and are protected under U.S. copyright and other laws. Unless in conjunction with business conducted with Jensen Infrastructure , any use of Jensen Infrastructure work product without express, written consent is prohibited, and recipient is prohibited from distributing any and all work product to non-approved third parties under penalty of civil action.
This product shall only be produced in a Jensen Infrastructure facility.

NAME & DESCRIPTION:		REV:
200036023 Door Component Steel Side Bar		D-3
WEIGHT: 6.327 lbmass	DRAWN BY: C. Heywood	SHEET: 7 OF 14
CREATED: 2/13/2020	MODIFIED: 8/31/2026	

100002322.idw

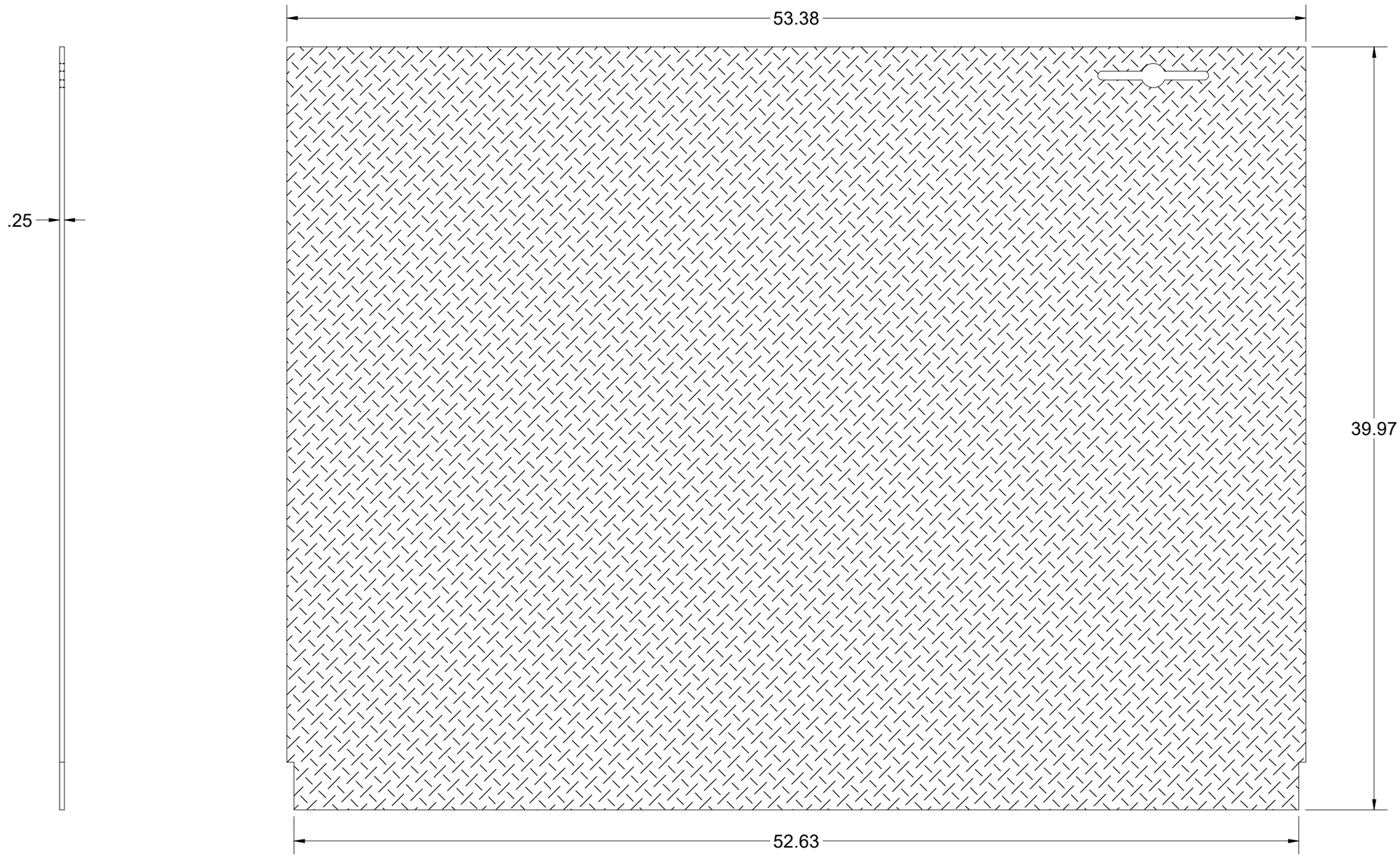

100002322.idw

BEND TABLE				MATERIAL IFS: 100007736
BEND RADIUS	V-OPENING	BEND ANGLE	BEND DEDUCTION	MATERIAL THK: 0.25
-	-	- 0	-	MAT DESCRIPTION: SHT STL CQ DP RAW .25 - 36 KSI YIELD

Infrastructure JENSEN
527 Dunn Circle, Sparks, NV 89431
775-352-2716 FAX: 755-358-8127
JENSENMETALTECH.COM

©2026 Jensen Infrastructure - All rights reserved.
All materials appearing as Jensen Infrastructure documents and the like are proprietary work product and are protected under U.S. copyright and other laws. Unless in conjunction with business conducted with Jensen Infrastructure , any use of Jensen Infrastructure work product without express, written consent is prohibited, and recipient is prohibited from distributing any and all work product to non-approved third parties under penalty of civil action.
This product shall only be produced in a Jensen Infrastructure facility.

NAME & DESCRIPTION: 200036024 Door Component Steel Plate, Bottom		REV: D-3
WEIGHT: 166.426 lbmass	DRAWN BY: C. Heywood	SHEET: 8 OF 14
CREATED: 2/13/2020	MODIFIED: 8/31/2026	

NON-SYMMETRIC

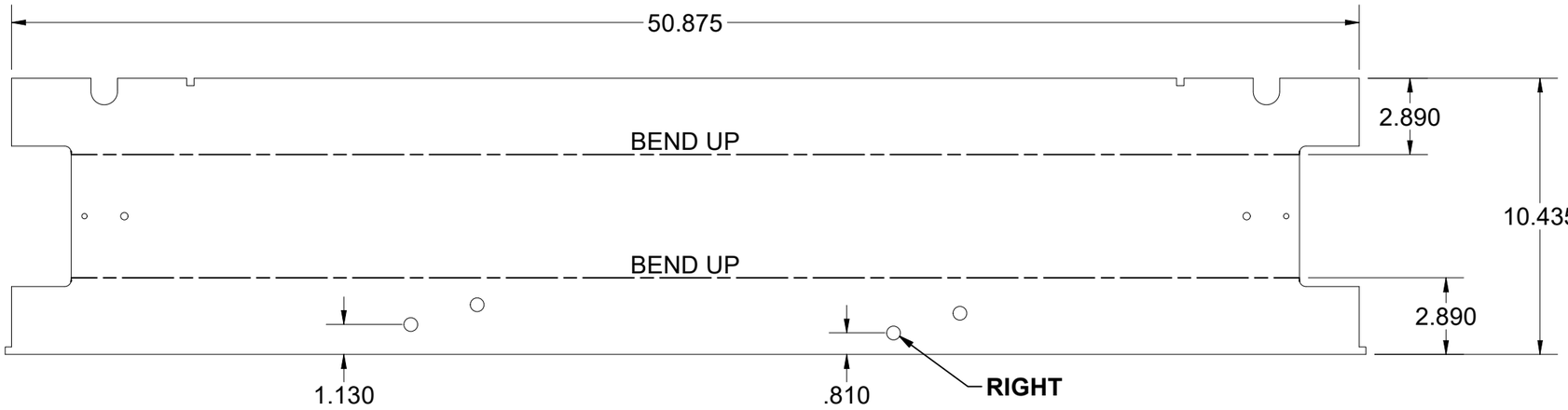



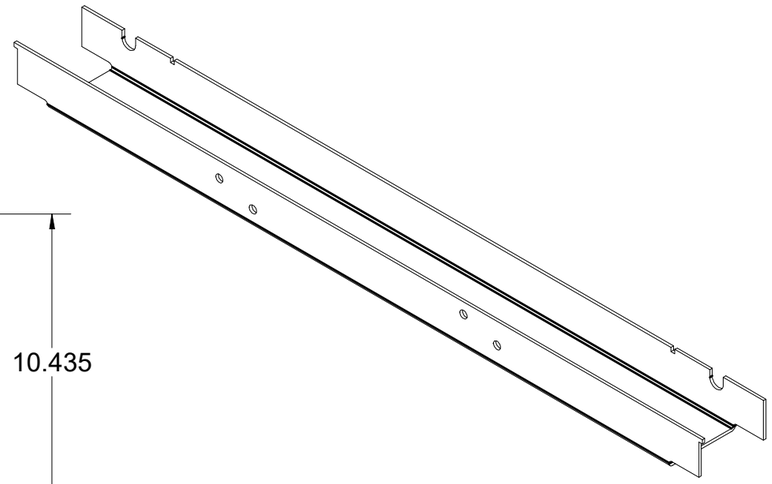

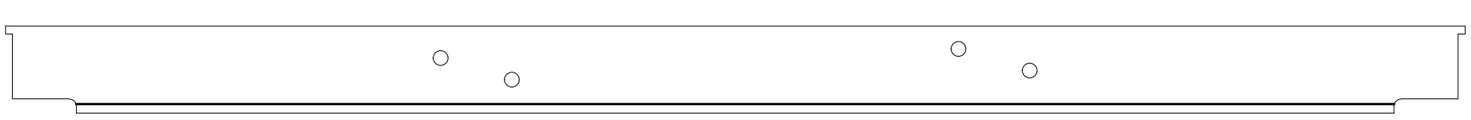

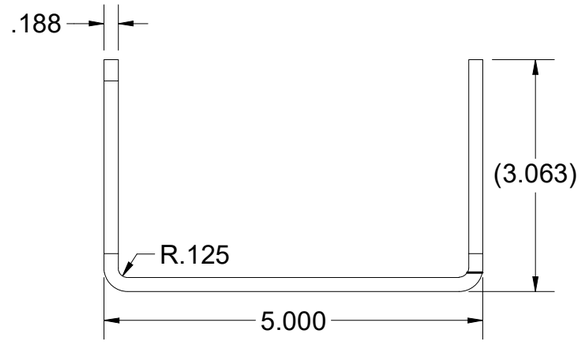

100002322.idw

BEND TABLE				MATERIAL IFS: 100007821
BEND RADIUS	V-OPENING	BEND ANGLE	BEND DEDUCTION	MATERIAL THK: 0.1875
0.125	2	90	0.345	MAT DESCRIPTION: SHT STL GR80 SM-HRPO RAW .1875

Infrastructure JENSEN
527 Dunn Circle, Sparks, NV 89431
775-352-2716 FAX: 755-358-8127
JENSENMETALTECH.COM

©2026 Jensen Infrastructure - All rights reserved.
All materials appearing as Jensen Infrastructure documents and the like are proprietary work product and are protected under U.S. copyright and other laws. Unless in conjunction with business conducted with Jensen Infrastructure , any use of Jensen Infrastructure work product without express, written consent is prohibited, and recipient is prohibited from distributing any and all work product to non-approved third parties under penalty of civil action.
This product shall only be produced in a Jensen Infrastructure facility.

NAME & DESCRIPTION: 200036025 Door Component Steel Channel		REV: D-3
WEIGHT: 27.123 lbmass	DRAWN BY: C. Heywood	SHEET: 9 OF 14
CREATED: 2/13/2020	MODIFIED: 8/31/2026	

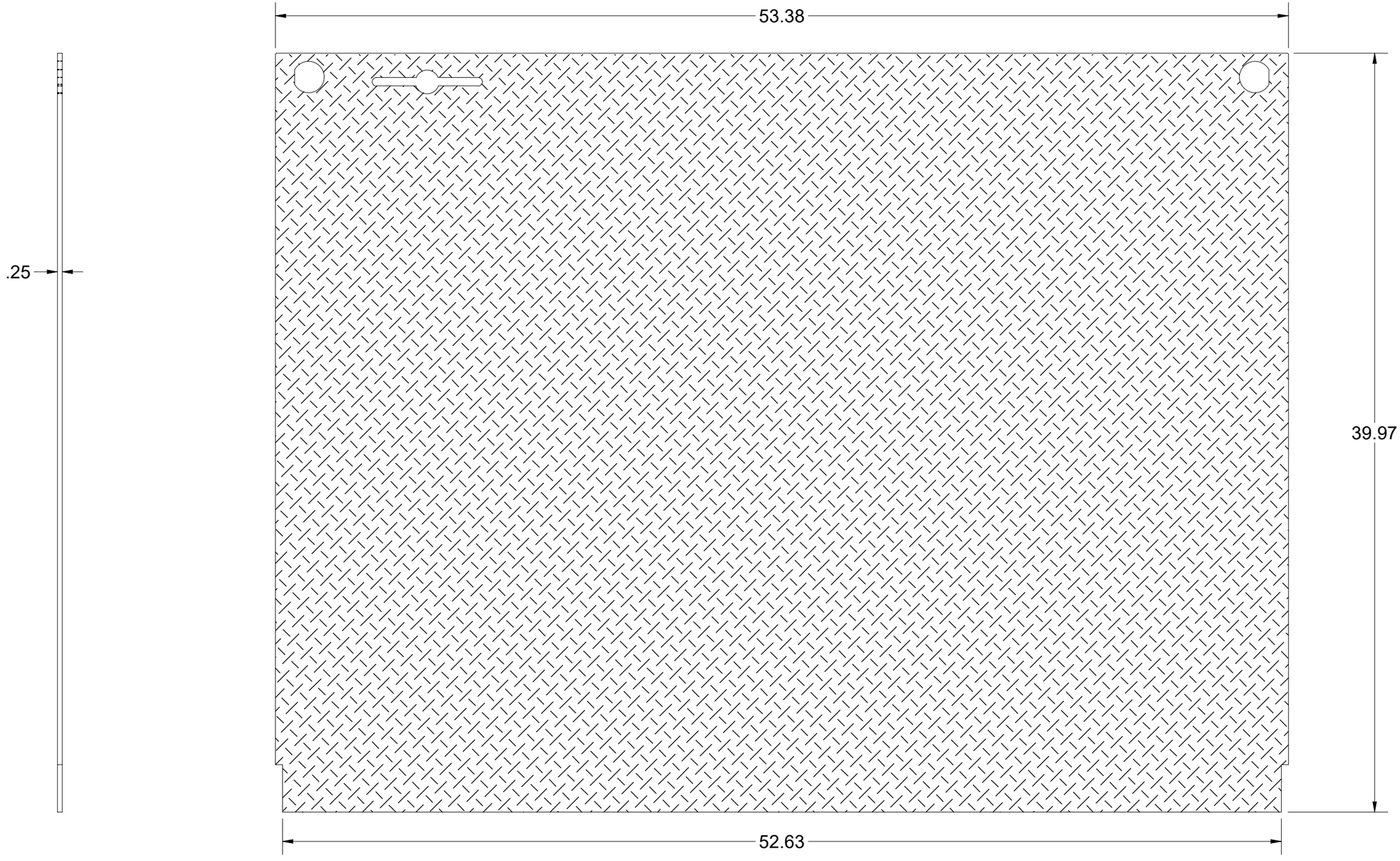

100002322.idw

BEND TABLE				MATERIAL IFS: 100007736
BEND RADIUS	V-OPENING	BEND ANGLE	BEND DEDUCTION	MATERIAL THK: 0.25
-	-	- 0	-	MAT DESCRIPTION: SHT STL CQ DP RAW .25 - 36 KSI YIELD

Infrastructure
JENSEN
527 Dunn Circle, Sparks, NV 89431
775-352-2716 FAX: 755-358-8127
JENSENMETALTECH.COM

©2026 Jensen Infrastructure - All rights reserved.
All materials appearing as Jensen Infrastructure documents and the like are proprietary work product and are protected under U.S. copyright and other laws.
Unless in conjunction with business conducted with Jensen Infrastructure , any use of Jensen Infrastructure work product without express, written consent is prohibited, and recipient is prohibited from distributing any and all work product to non-approved third parties under penalty of civil action.
This product shall only be produced in a Jensen Infrastructure facility.

NAME & DESCRIPTION: 200036027 Door Component Steel Plate, Top		REV: D-3
WEIGHT: 166.096 lbmass	DRAWN BY: C. Heywood	SHEET: 10 OF 14
CREATED: 2/13/2020	MODIFIED: 8/31/2026	

NON-SYMMETRIC

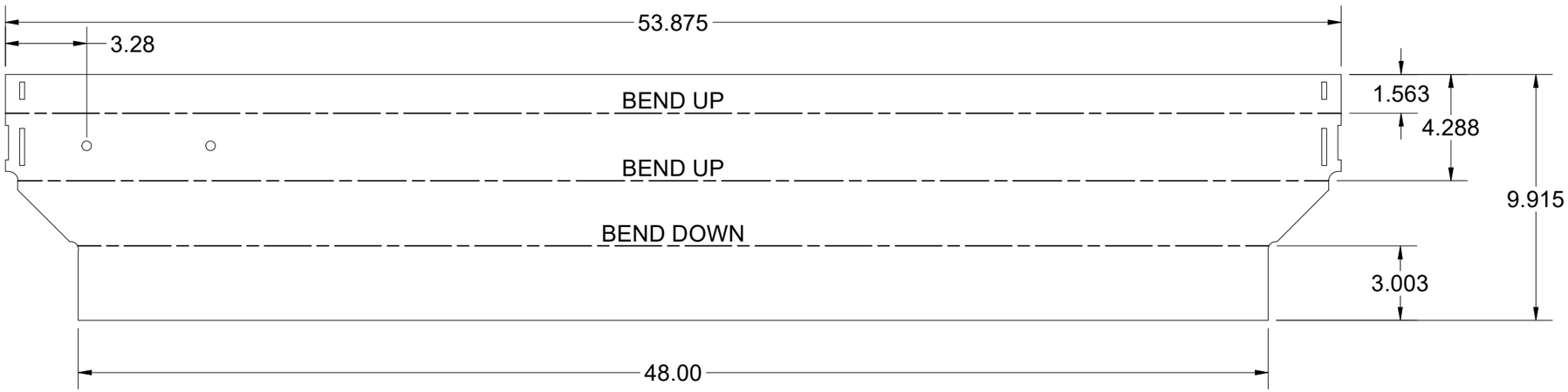

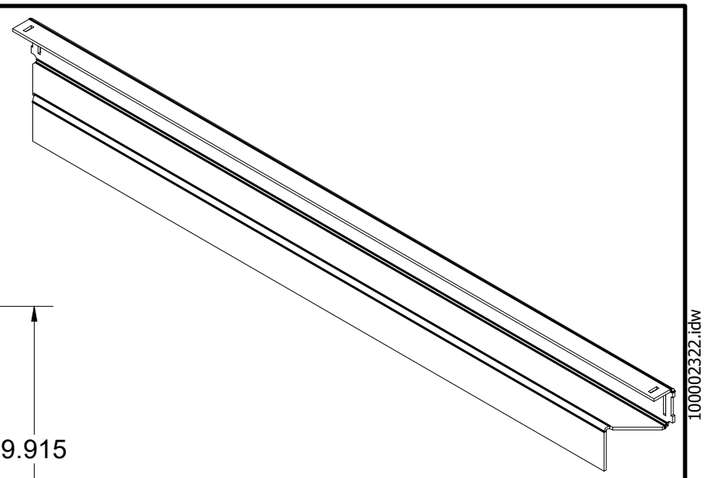

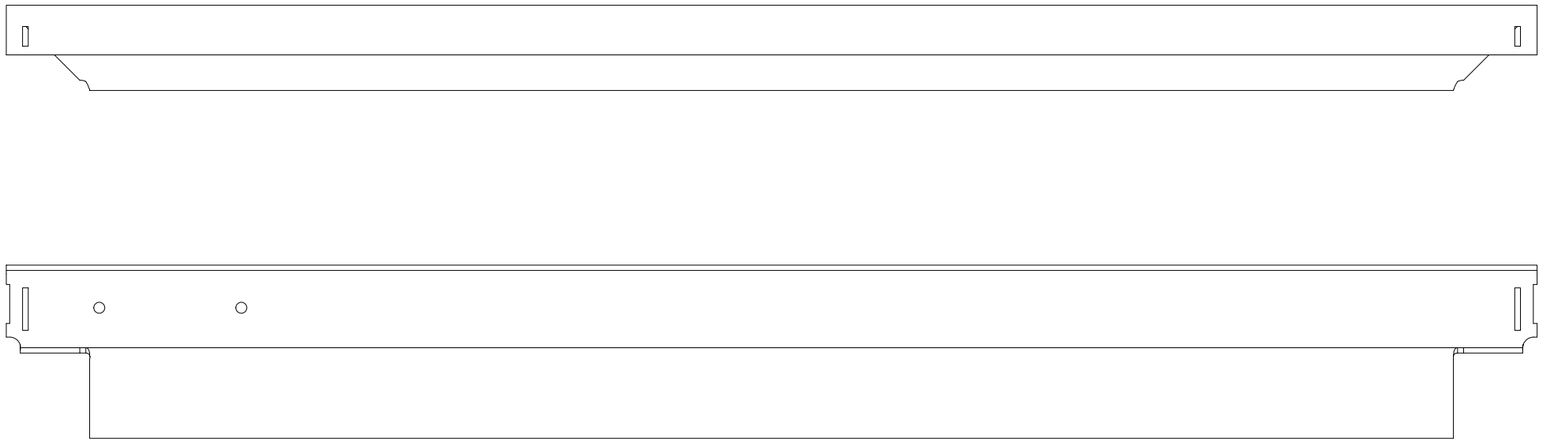

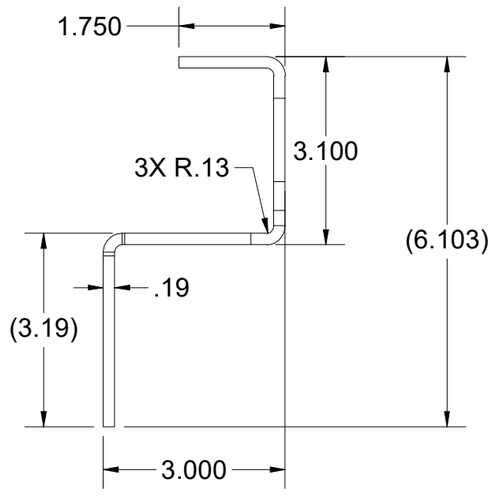

BEND TABLE				MATERIAL IFS: 100007734
BEND RADIUS	V-OPENING	BEND ANGLE	BEND DEDUCTION	MATERIAL THK: 0.1875
0.125	2	90	0.375	MAT DESCRIPTION: STL ASTM A36 SM-HRPO 60X120 RAW .1875

Infrastructure
JENSEN
527 Dunn Circle, Sparks, NV 89431
775-352-2716 FAX: 755-358-8127
JENSENMETALTECH.COM

©2026 Jensen Infrastructure - All rights reserved. All materials appearing as Jensen Infrastructure documents and the like are proprietary work product and are protected under U.S. copyright and other laws. Unless in conjunction with business conducted with Jensen Infrastructure , any use of Jensen Infrastructure work product without express, written consent is prohibited, and recipient is prohibited from distributing any and all work product to non-approved third parties under penalty of civil action. This product shall only be produced in a Jensen Infrastructure facility.

NAME & DESCRIPTION: 200036029 Frame Component Steel Frame End, Adjustable Ladder Loops		REV: D-3
WEIGHT: 27.731 lbmass	DRAWN BY: C. Heywood	SHEET: 11 OF 14
CREATED: 2/13/2020	MODIFIED: 8/31/2026	

100002322.idw

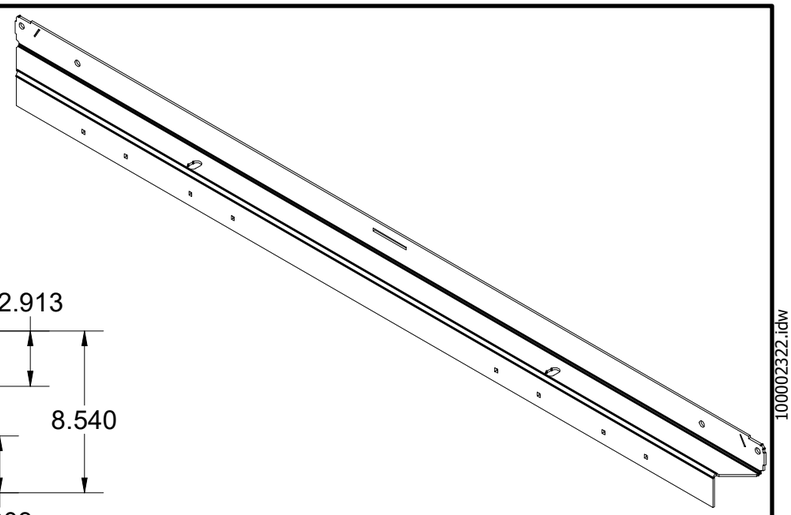

SYMMETRIC

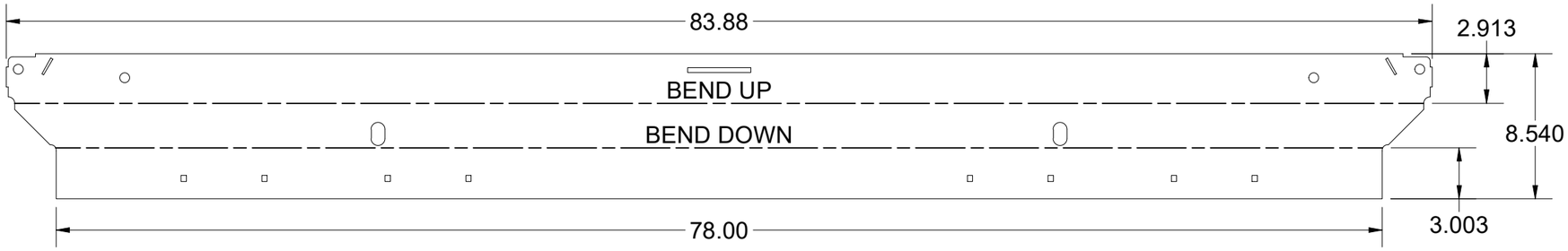

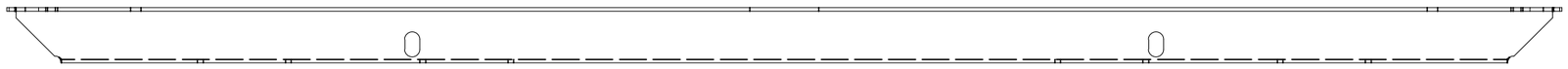

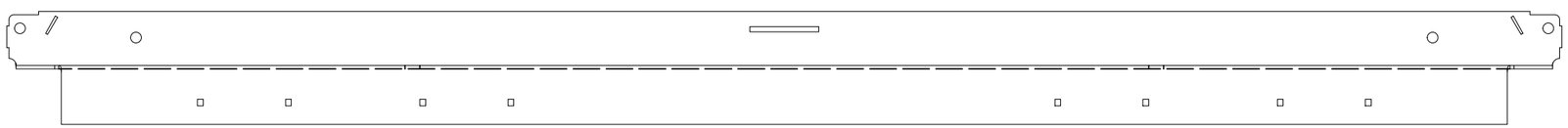

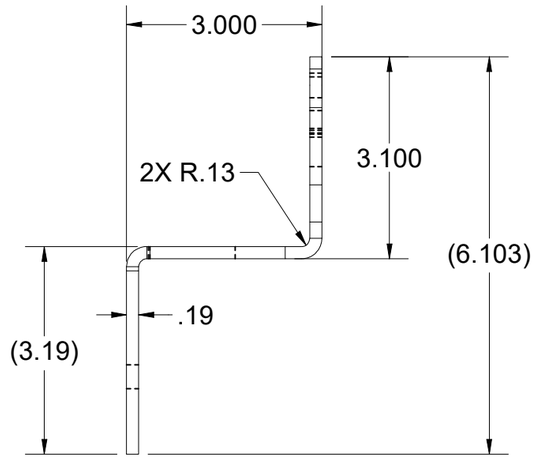

BEND TABLE				MATERIAL IFS: 100007734
BEND RADIUS	V-OPENING	BEND ANGLE	BEND DEDUCTION	MATERIAL THK: 0.1875
0.125	2	90	0.375	MAT DESCRIPTION: STL ASTM A36 SM-HRPO 60X120 RAW .1875

Infrastructure JENSEN
527 Dunn Circle, Sparks, NV 89431
775-352-2716 FAX: 755-358-8127
JENSENMETALTECH.COM

©2026 Jensen Infrastructure - All rights reserved.
All materials appearing as Jensen Infrastructure documents and the like are proprietary work product and are protected under U.S. copyright and other laws. Unless in conjunction with business conducted with Jensen Infrastructure , any use of Jensen Infrastructure work product without express, written consent is prohibited, and recipient is prohibited from distributing any and all work product to non-approved third parties under penalty of civil action.
This product shall only be produced in a Jensen Infrastructure facility.

NAME & DESCRIPTION: 200036030 Frame Component Steel Frame Side, Adjustable Ladder Loops		REV: D-3
WEIGHT: 37.205 lbmass	DRAWN BY: C. Heywood	SHEET: 12 OF 14
CREATED: 2/13/2020	MODIFIED: 8/31/2026	

100002322.idw

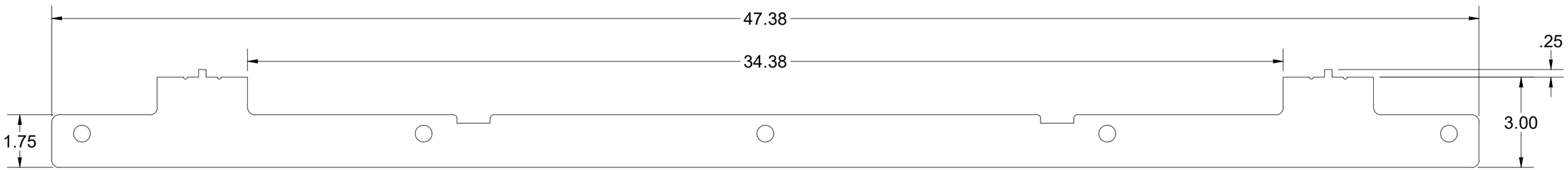

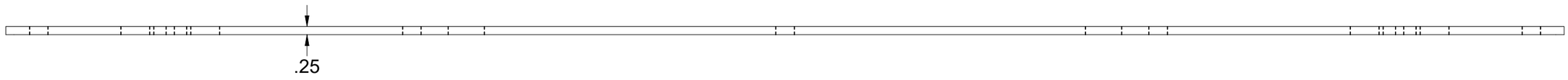

BEND TABLE				MATERIAL IFS: 100007735
BEND RADIUS	V-OPENING	BEND ANGLE	BEND DEDUCTION	MATERIAL THK: 0.25
-	-	- 0	-	MAT DESCRIPTION: STL ASTM A36 SM-HRPO RAW .250

Infrastructure
JENSEN
527 Dunn Circle, Sparks, NV 89431
775-352-2716 FAX: 755-358-8127
JENSENMETALTECH.COM

©2026 Jensen Infrastructure - All rights reserved.
All materials appearing as Jensen Infrastructure documents and the like are proprietary work product and are protected under U.S. copyright and other laws. Unless in conjunction with business conducted with Jensen Infrastructure , any use of Jensen Infrastructure work product without express, written consent is prohibited, and recipient is prohibited from distributing any and all work product to non-approved third parties under penalty of civil action.
This product shall only be produced in a Jensen Infrastructure facility.

NAME & DESCRIPTION: 200087252 Door Component Steel Lap Bar 48in, 2.5" Stiffener Offset		REV: D-3
WEIGHT: 6.293 lbmass	DRAWN BY: C. Heywood	SHEET: 13 OF 14
CREATED: 2/13/2020	MODIFIED: 8/31/2026	

100002322.idw

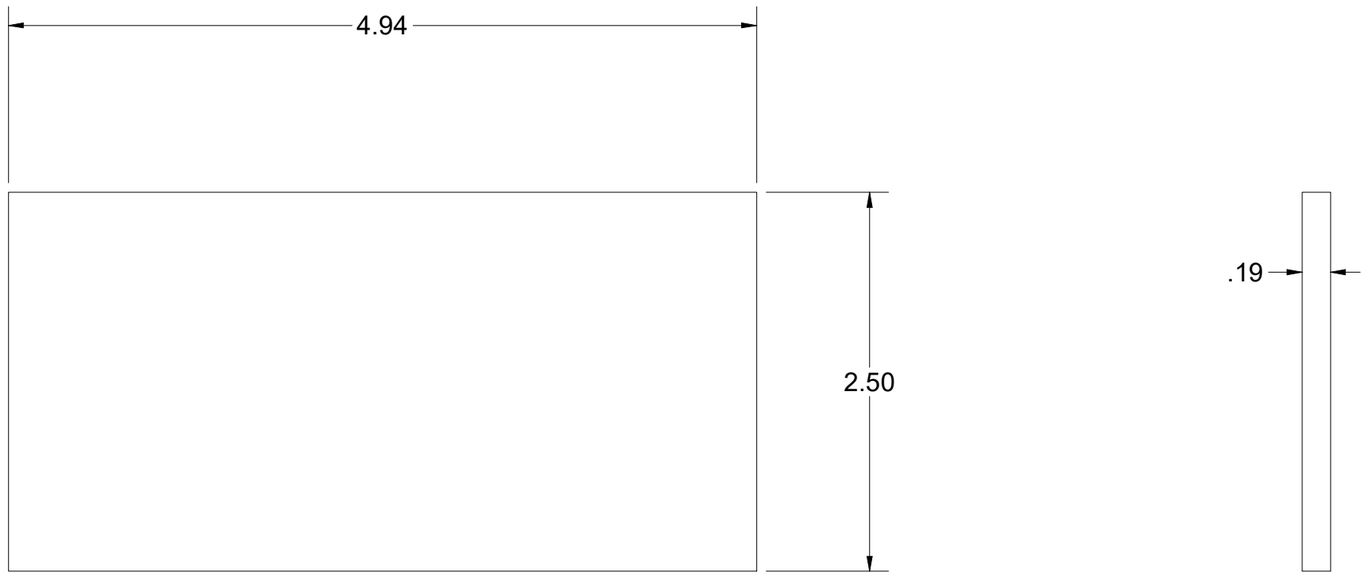

BEND TABLE			
BEND RADIUS	V-OPENING	BEND ANGLE	BEND DEDUCTION
-	-	- 0	-

MATERIAL IFS: 100007821

MATERIAL THK: 0.1875

MAT DESCRIPTION: SHT STL GR80 SM-HRPO RAW .1875

Infrastructure
JENSEN
527 Dunn Circle, Sparks, NV 89431
775-352-2716 FAX: 755-358-8127
JENSENMETALTECH.COM

©2026 Jensen Infrastructure - All rights reserved.
All materials appearing as Jensen Infrastructure documents and the like are proprietary work product and are protected under U.S. copyright and other laws. Unless in conjunction with business conducted with Jensen Infrastructure , any use of Jensen Infrastructure work product without express, written consent is prohibited, and recipient is prohibited from distributing any and all work product to non-approved third parties under penalty of civil action.
This product shall only be produced in a Jensen Infrastructure facility.

NAME & DESCRIPTION: 200117297 Anti-Distortion Member

REV: D-3

WEIGHT: 0.656 lbmass

DRAWN BY: C. Heywood

CREATED: 2/13/2020

MODIFIED: 8/31/2026

SHEET: 14 OF 14

100002322.idw