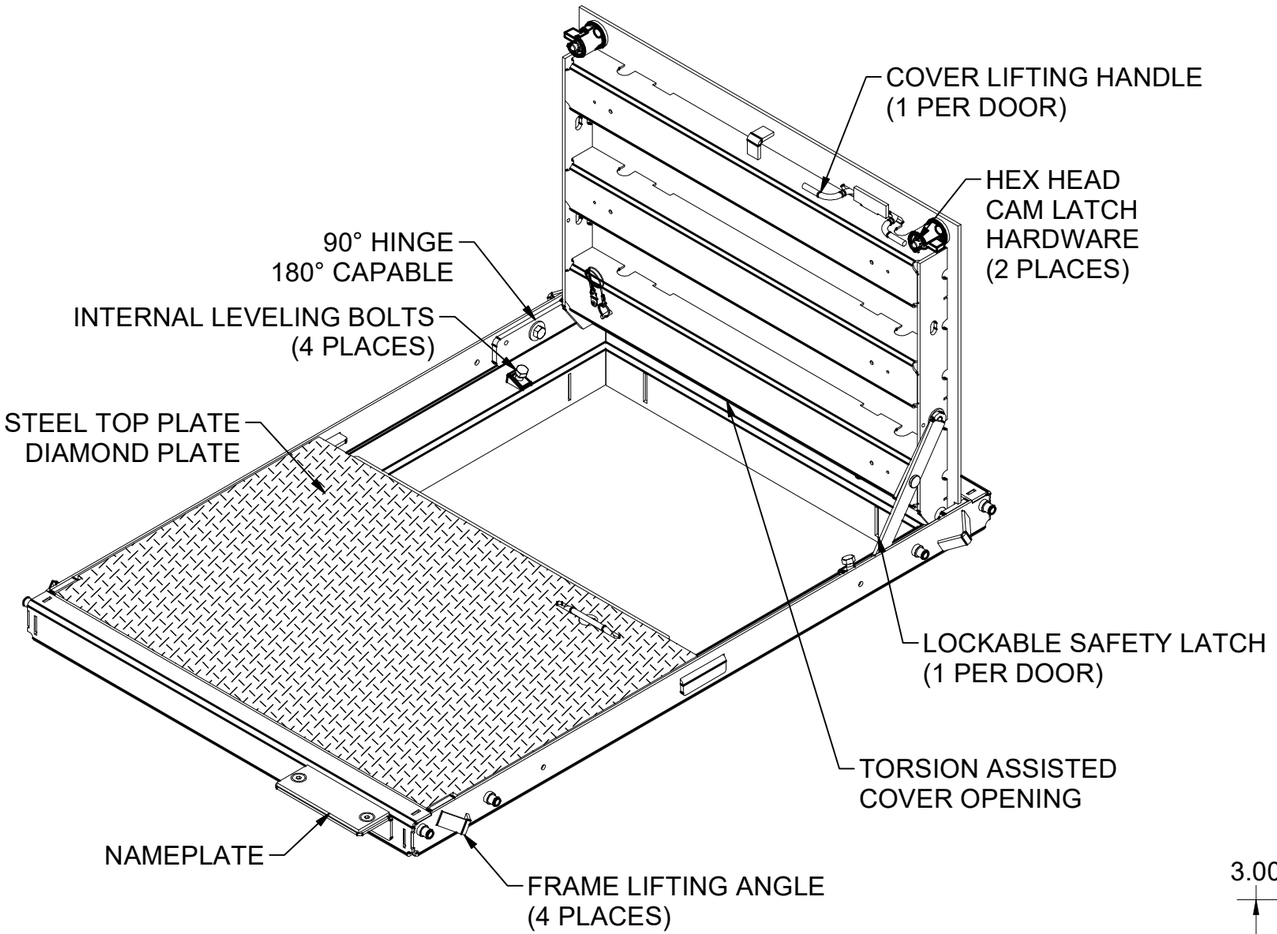

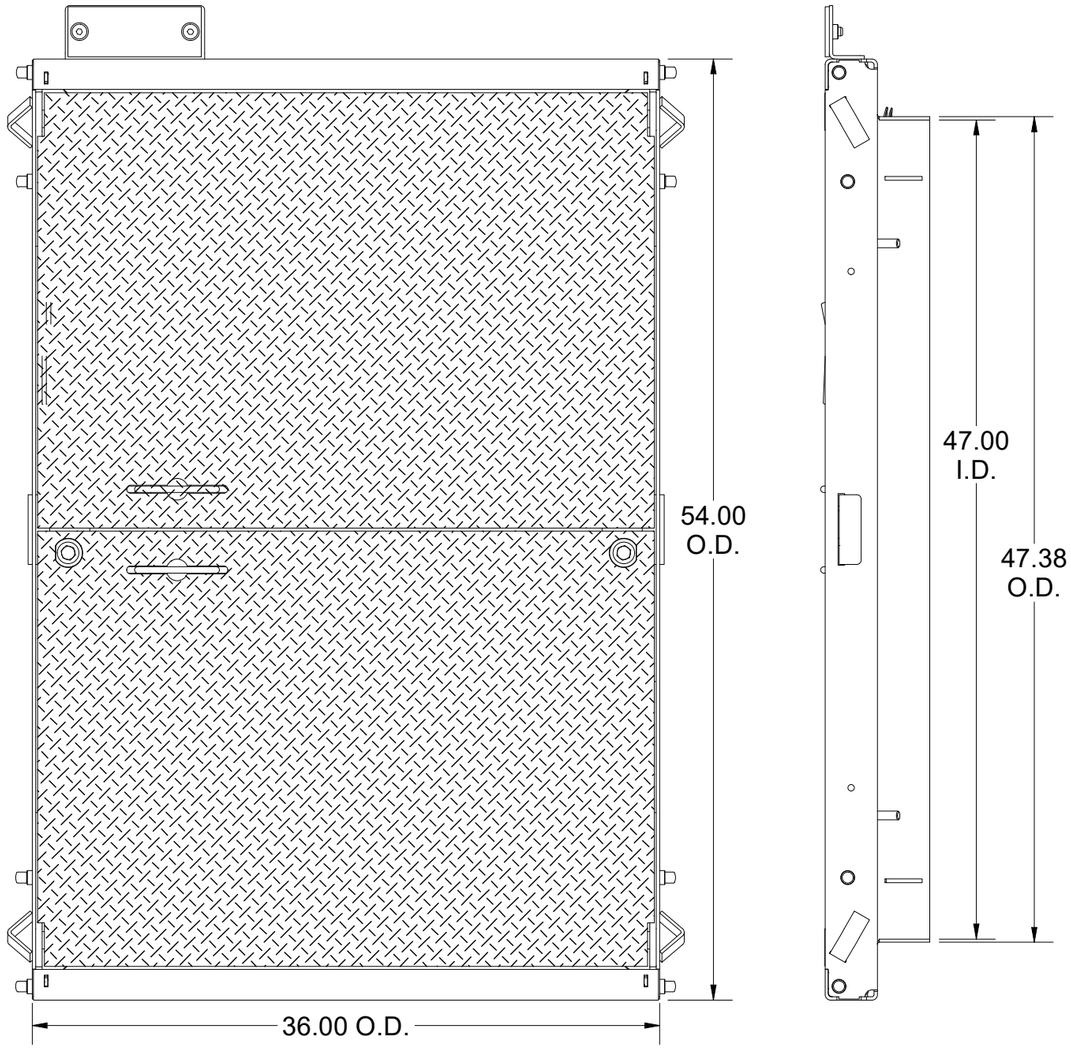

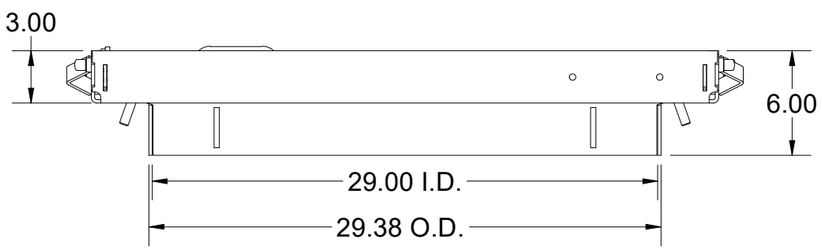

100002311.idw

ASTM C1802: Level 04

16,000 lb load on 10" x 20" footprint, without impact restricted to parking spaces and areas within close proximity of roadways.

SURFACE:	Diamond Plate	FINISH:	Galvanized
WEIGHT:	324.59 lbs	MARKING:	As Noted

JENSEN METALTECH
450 E. GLENDALE AVE. SPARKS. NV 89431
775-352-2716 FAX: 755-358-8127
JENSENMETALTECH.COM

©2021 Jensen Precast- All rights reserved. All materials appearing as Jensen Precast documents and the like are proprietary work product and are protected under U.S. copyright and other laws. Unless in conjunction with business conducted with Jensen Precast, any use of Jensen Precast work product without express, written consent is prohibited, and recipient is prohibited from distributing any and all work product to non-approved third parties under penalty of civil action.

DESCRIPTION: CAS2-3048-AH4-DP-G-OH06

30x48 Cover Assembly (ASTM Load Level 04, 2 Door, Steel, Hinged, Diamond Plate, Galvanized , , N/A) OH 06

PART NUMBER:	100002311	DRAWN BY:	CNATION
CREATED:	12/6/2018	MODIFIED:	7/22/2021

REV: A

SHEET: 1

BILL OF MATERIALS

ITEM	UNIT QTY	QTY	PART NUMBER	DESCRIPTION
1	1	1	200035318	CAS2-3048-AH4-DP-R-OH06

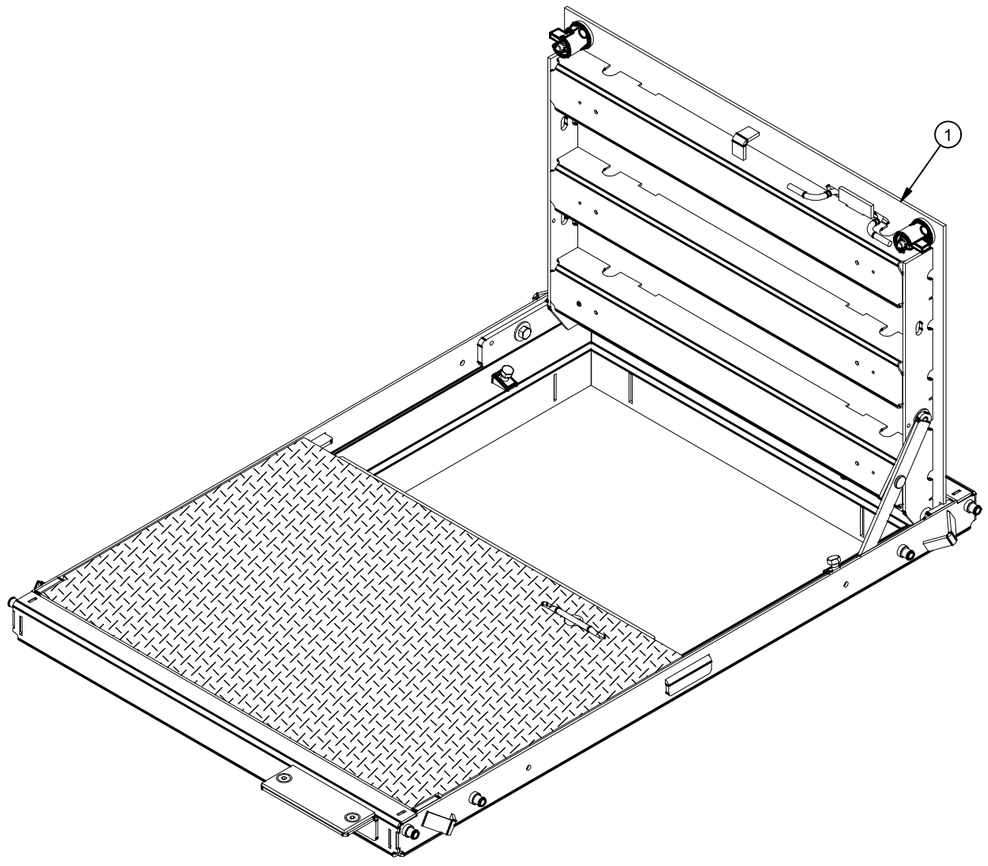

100002311.idw

MATERIAL FINISH: Galvanized	JENSEN METALTECH 450 E. GLENDALE AVE. SPARKS. NV 89431 775-352-2716 FAX: 755-358-8127 *JENSENMETALTECH.COM*	©2021 Jensen Precast- All rights reserved. All materials appearing as Jensen Precast documents and the like are proprietary work product and are protected under U.S. copyright and other laws. Unless in conjunction with business conducted with Jensen Precast, any use of Jensen Precast work product without express, written consent is prohibited, and recipient is prohibited from distributing any and all work product to non-approved third parties under penalty of civil action.	PART NUMBER & DESCRIPTION: 100002311 CAS2-3048-AH4-DP-G-OH06	REV: B-3
MATERIAL SURFACE: Diamond Plate			WEIGHT: N/A CREATED: 12/6/2018	DRAWN BY: CNATION MODIFIED: 7/22/2021	SHEET: 2

BURN LIST - BOM

ITEM QTY	PART NUMBER	DESCRIPTION	STOCK NUMBER	MATERIAL	MASS
2	200034253	Frame Component Steel Frame End, Adjustable Clevis Mount	100007734	STL ASTM A36 SM-HRPO 60X120 RAW .1875	18.304 lbmass
2	200034254	Frame Component Steel Frame Side, Adjustable Clevis Mount	100007734	STL ASTM A36 SM-HRPO 60X120 RAW .1875	24.036 lbmass
6	200052647	Door Component Steel Channel, Robot Door	100007840	SHT STL GR80 GA-11 SM-HR RAW .1196	9.273 lbmass
4	200052648	Door Component Steel Side Bar, Robot Door	100007735	STL ASTM A36 SM-HRPO RAW .250	3.719 lbmass
1	200052649	Door Component Steel Plate, Top, Robot Door	100007736	SHT STL CQ DP RAW .25	68.341 lbmass
1	200052687	Door Component Steel Plate, Bottom,Robot Door	100007736	SHT STL CQ DP RAW .25	68.671 lbmass
1	200052895	Door Component Steel Lap Bar, Robot Door	100007735	STL ASTM A36 SM-HRPO RAW .250	4.523 lbmass

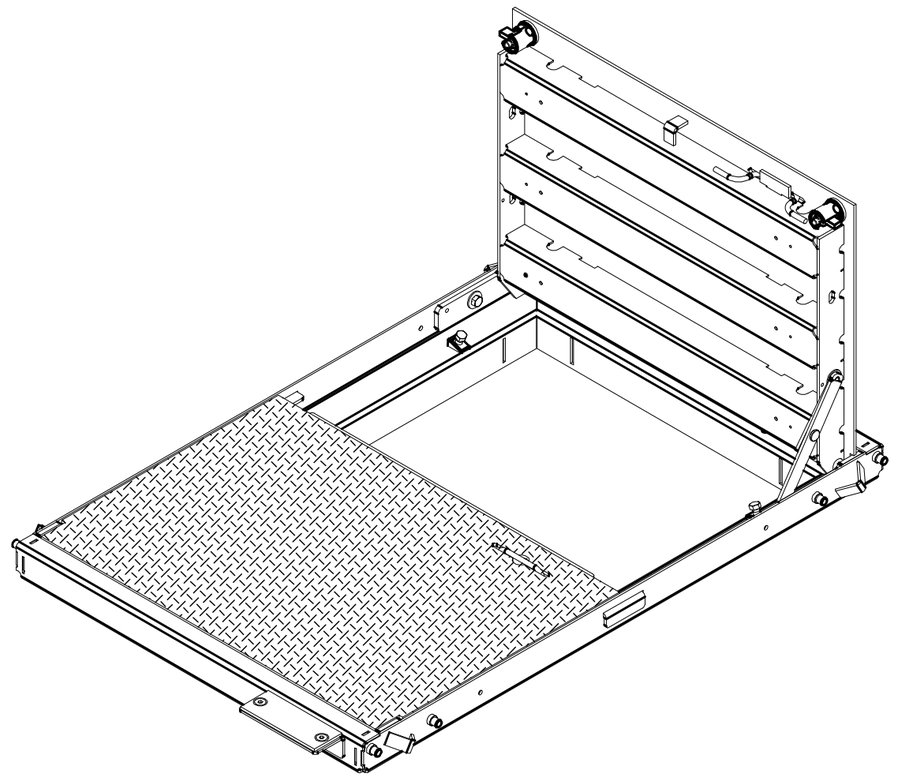

100002311.idw

MATERIAL FINISH: Galvanized

MATERIAL SURFACE: Diamond Plate

JENSEN METALTECH
450 E. GLENDALE AVE. SPARKS. NV 89431
775-352-2716 FAX: 755-358-8127
JENSENMETALTECH.COM

©2021 Jensen Precast- All rights reserved.
All materials appearing as Jensen Precast documents and the like are proprietary work product and are protected under U.S. copyright and other laws.
Unless in conjunction with business conducted with Jensen Precast, any use of Jensen Precast work product without express, written consent is prohibited, and recipient is prohibited from distributing any and all work product to non-approved third parties under penalty of civil action.

PART NUMBER & DESCRIPTION: 100002311 CAS2-3048-AH4-DP-G-OH06

REV: B-3

WEIGHT: N/A

DRAWN BY: CNATION

CREATED: 12/6/2018

MODIFIED: 7/22/2021

SHEET: 3

BILL OF MATERIALS

ITEM	UNIT QTY	QTY	PART NUMBER	DESCRIPTION
1	1	1	200052686	DAS2-B-3048-H4-DP-R-STANDARD ROBOT DOOR
2	1	1	200052645	DAS2-T-3048-H4-DP-R-STANDARD ROBOT DOOR
3	1	1	200034252	FAS-3048-AH4-R-OH06
4	1	4	100003823	BOLT HEX 1/2-13 UNC 1.5 ZINC
5	1	2	100011407	BOLT HEX 1/2-13 UNC 2.25 ZINC
6	1	4	100005059	BOLT HEX 1/2-13 UNC 2.5 ZINC
7	1	2	100007733	BOLT HEX SOCKET FLAT COUNTERSUNK HEAD 1/2-13 UNC 1 GR 5 ZINC-PLATED
8	1	4	100007869	BOLT SHCS 1/2-13 X 1-3/4 SS
9	1	4	100007873	BOLT SHCS 3/8-16 X 1-1/4 PLATED
10	1	8	100007939	CAP VINYL .467 X 1/2
11	1	2	100007918	COTTER PIN 0.094DIA X 1-1/4
12	1	2	100007492	HEX NUT NYLOCK 1/2-13 GR-5 ZINC-PLATED
13	1	2	100007729	HEX NUT SLOTTED CASTLE HEAD 1/2-13 SS
14	1	2	100007655	HINGE ASSY STL LEFT .375
15	1	2	100007666	HINGE ASSY STL
16	1	2	100007924	LANYARD 3/64 W/PIN COATED SS
17	1	1	100007391	NAME PLATE STEEL - BLANK
18	1	2	100007857	NUT FINGER 1/2-13 BRASS
19	1	2	100007882	RIVET GRIP STEEL 3/16 X 7/16 LRG HD
20	1	4	100007859	RIVET NUT 3/8-16 FLAT KNURLED
21	1	2	100007933	SAFETY LATCH ASSY FOR UNI AND 90 D HINGE
22	1	2	100007915	SPRING COMPRESSION 055 X 5/8 X 7/8 LONG
23	1	2	100007669	SPRING MOUNT ASSY .375
24	1	2	100007725	TORSION HEX ROD 3/8 X 30 RAW
25	1	8	100011418	WASHER FLAT 1/2 X 1 3/8 USS TYPE A ZINC
26	1	2	100007876	BOLT SHOULDER 3/8 X 1/2 WITH 3/8-16 UNC THREADS GR 5 PLATED

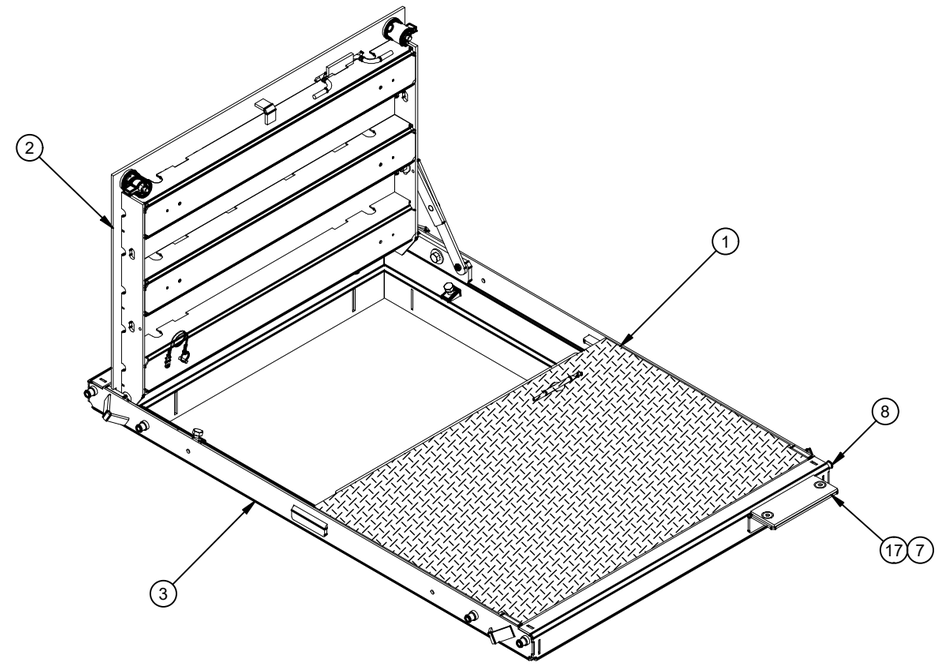

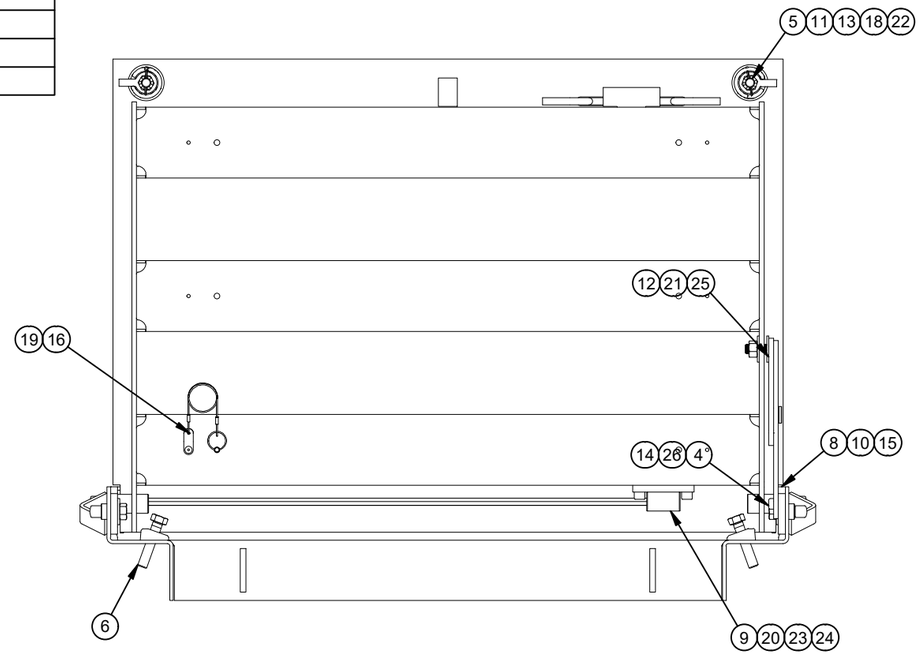

10000311.idw

MATERIAL FINISH: Raw	JENSEN METALTECH 450 E. GLENDALE AVE. SPARKS. NV 89431 775-352-2716 FAX: 755-358-8127 *JENSENMETALTECH.COM*	©2021 Jensen Precast- All rights reserved. All materials appearing as Jensen Precast documents and the like are proprietary work product and are protected under U.S. copyright and other laws. Unless in conjunction with business conducted with Jensen Precast, any use of Jensen Precast work product without express, written consent is prohibited, and recipient is prohibited from distributing any and all work product to non-approved third parties under penalty of civil action.	PART NUMBER & DESCRIPTION: 200035318 CAS2-3048-AH4-DP-R-OH06 — REV: B-3
MATERIAL SURFACE: Diamond Plate			WEIGHT: 324.587 lbmass — DRAWN BY: CNATION — SHEET: 4
			CREATED: 12/6/2018 — MODIFIED: 7/22/2021

BILL OF MATERIALS

ITEM	UNIT QTY	QTY	PART NUMBER	DESCRIPTION
1	1	2	100007970	CAM TOWER CAST STEEL
2	1	3	200052647	Door Component Steel Channel, Robot Door
3	1	1	200052649	Door Component Steel Plate, Top, Robot Door
4	1	2	200052648	Door Component Steel Side Bar, Robot Door
5	1	1	100007646	HANDLE RETAINER STL
6	1	1	100007644	LEAF PULL HANDLE A36 3/8IN DIAMETER
7	1	1	100007647	LIFTING BRACKET STEEL LEAF

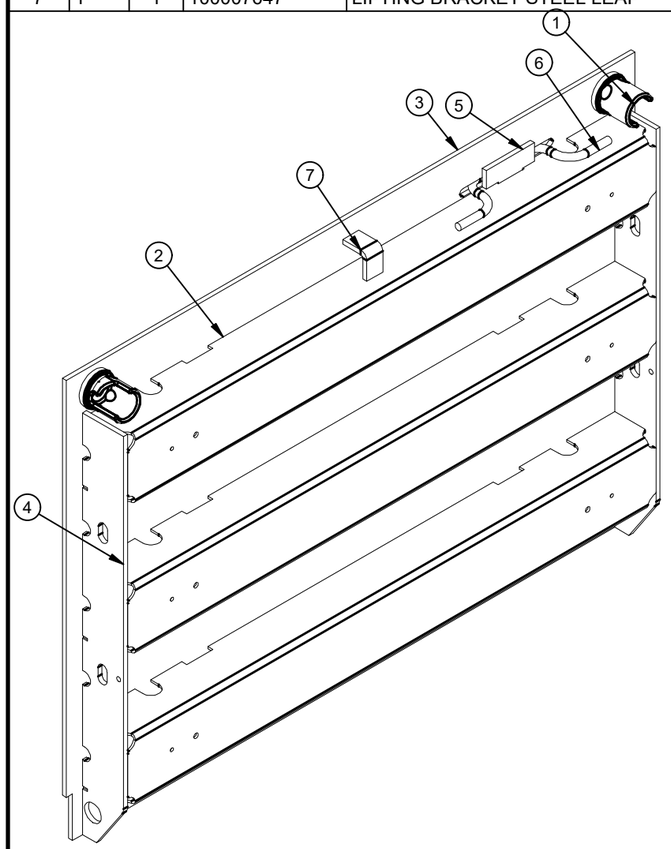

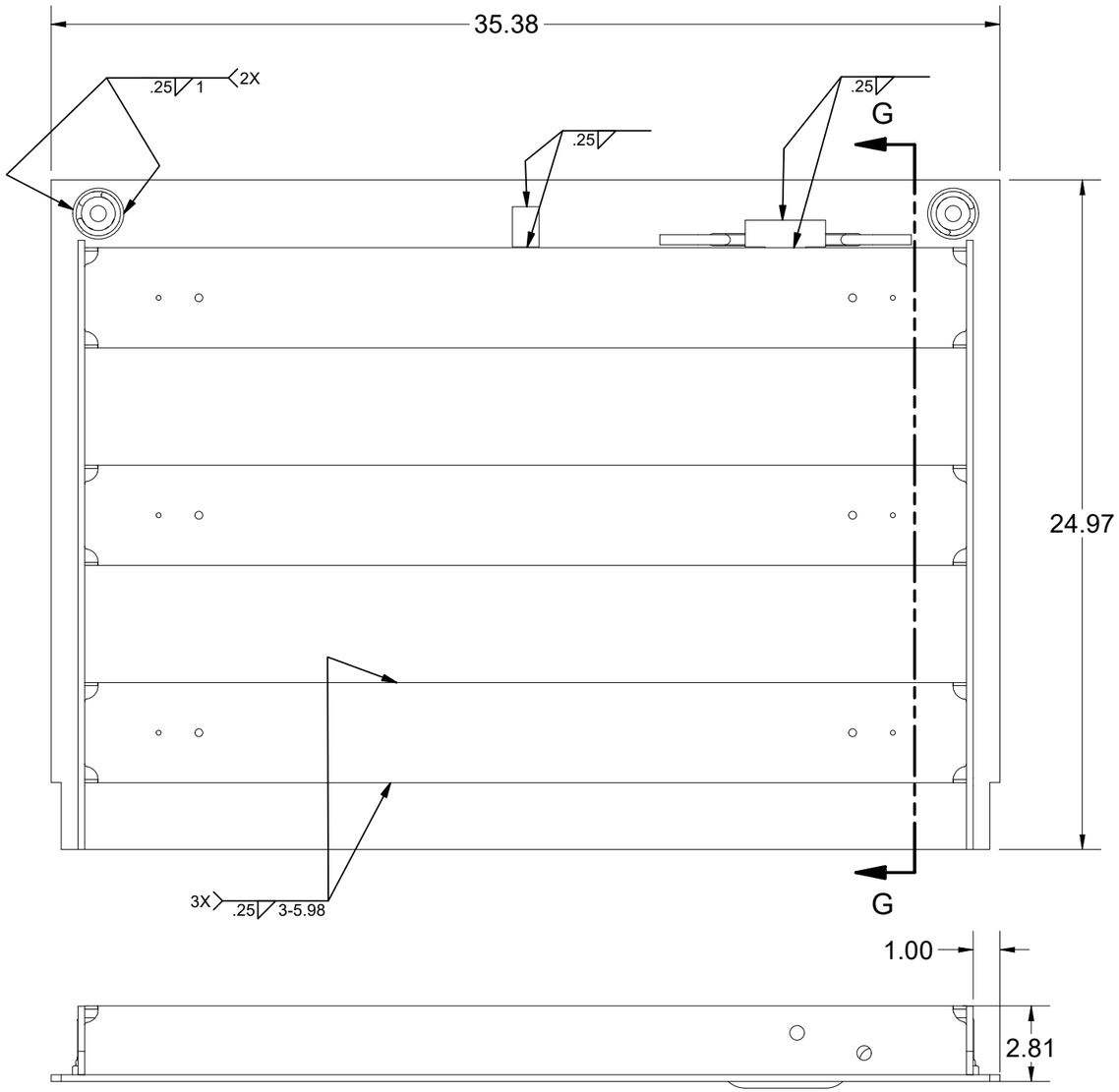

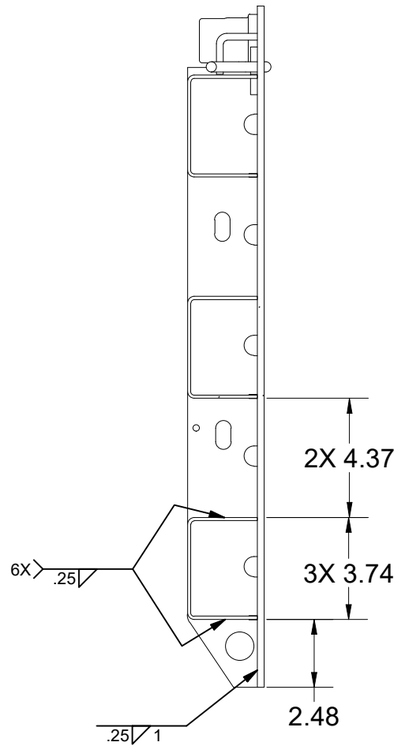

SECTION G-G

100002311.idw

ROBOT DOOR
SYSTEM:100iB
S1:13-25-8
S2:63-64

MATERIAL FINISH: Raw	JENSEN METALTECH 450 E. GLENDALE AVE. SPARKS. NV 89431 775-352-2716 FAX: 755-358-8127 *JENSENMETALTECH.COM*	©2021 Jensen Precast- All rights reserved. All materials appearing as Jensen Precast documents and the like are proprietary work product and are protected under U.S. copyright and other laws. Unless in conjunction with business conducted with Jensen Precast, any use of Jensen Precast work product without express, written consent is prohibited, and recipient is prohibited from distributing any and all work product to non-approved third parties under penalty of civil action.	PART NUMBER & DESCRIPTION: 200052645 DAS2-T-3048-H4-DP-R-STANDARD ROBOT DOOR
MATERIAL SURFACE: Diamond Plate			WEIGHT: 105.351 lbmass CREATED: 4/23/2018 DRAWN BY: CNATION MODIFIED: 7/22/2021

REV: A-5

SHEET: 5

BILL OF MATERIALS

ITEM	UNIT QTY	QTY	PART NUMBER	DESCRIPTION
1	1	3	200052647	Door Component Steel Channel, Robot Door
2	1	1	200052895	Door Component Steel Lap Bar, Robot Door
3	1	1	200052687	Door Component Steel Plate, Bottom,Robot Door
4	1	2	200052648	Door Component Steel Side Bar, Robot Door
5	1	1	100007644	LEAF PULL HANDLE A36 3/8IN DIAMETER
6	1	1	100007647	LIFTING BRACKET STEEL LEAF

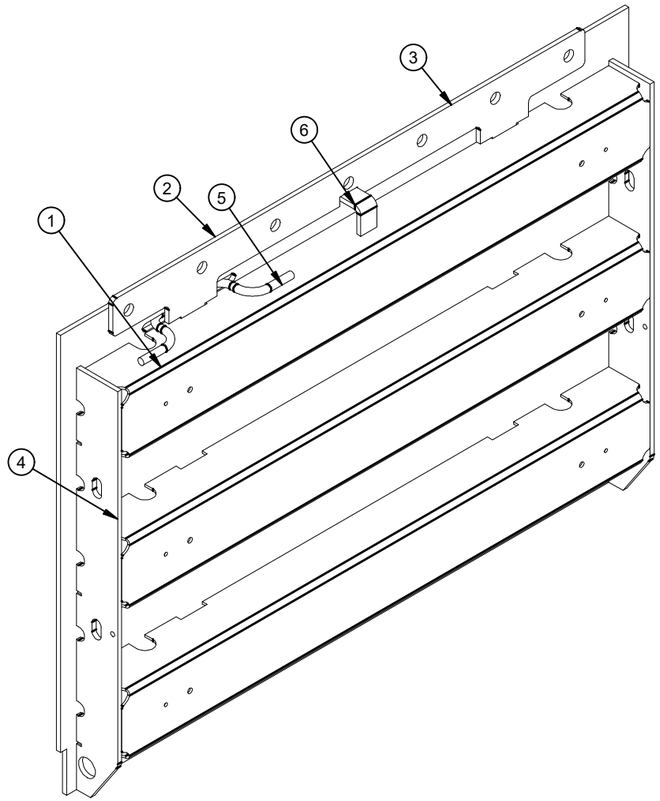

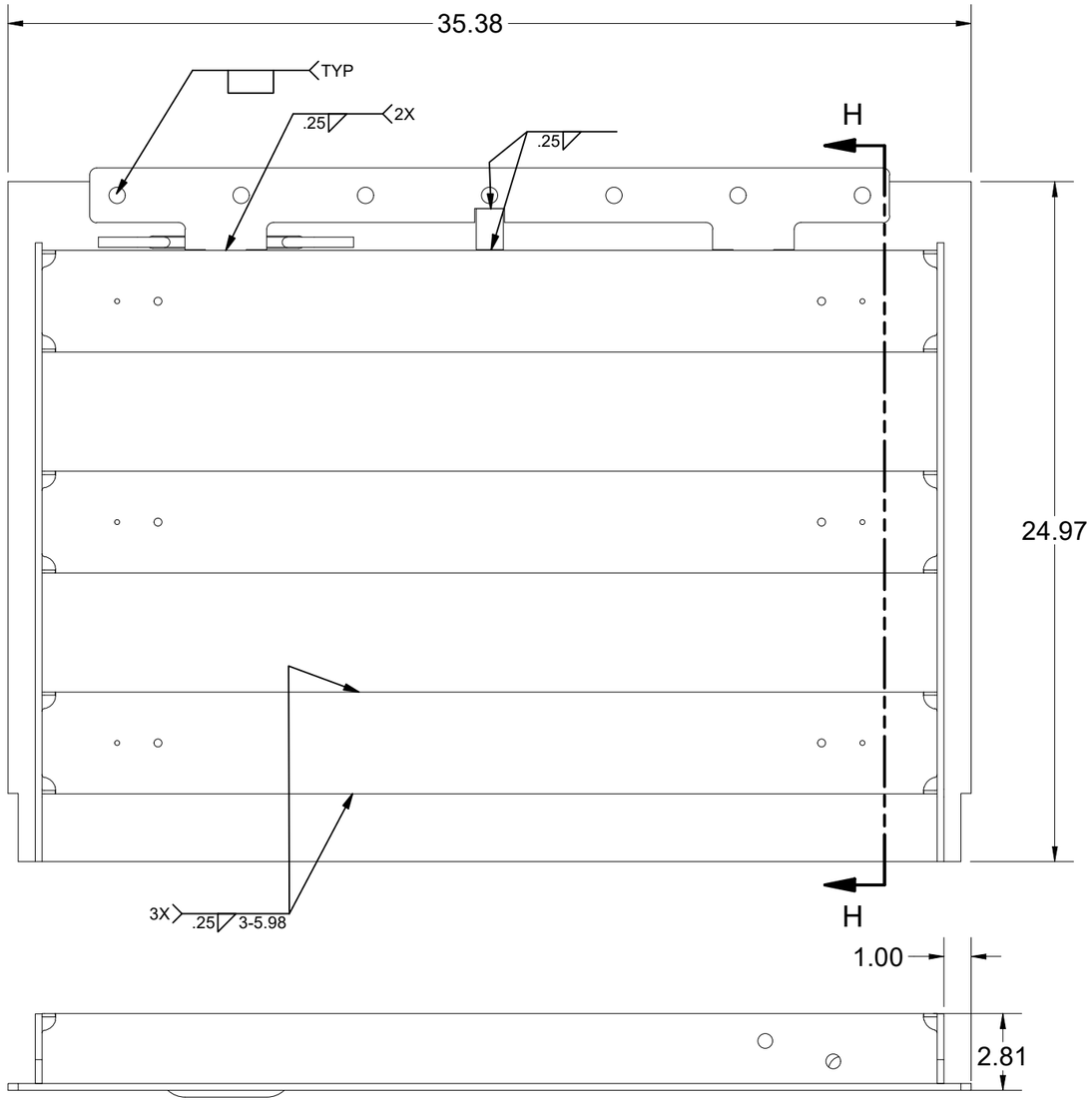

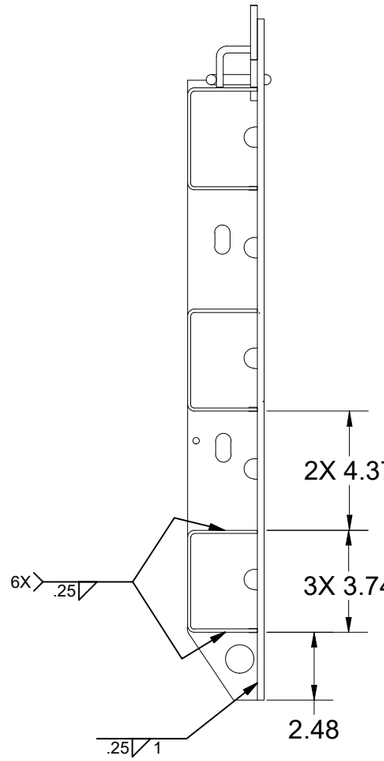

SECTION H-H

ROBOT DOOR
SYSTEM:100iB
S1:13-25-8
S2:63-64

MATERIAL FINISH: Raw	JENSEN METALTECH 450 E. GLENDALE AVE. SPARKS. NV 89431 775-352-2716 FAX: 755-358-8127 *JENSENMETALTECH.COM*	PART NUMBER & DESCRIPTION: 200052686 DAS2-B-3048-H4-DP-R-STANDARD ROBOT DOOR	REV: A-5
MATERIAL SURFACE: Diamond Plate		WEIGHT: 108.685 lbmass	DRAWN BY: CNATION
		CREATED: 4/23/2018	MODIFIED: 7/22/2021
			SHEET: 6

©2021 Jensen Precast- All rights reserved.
All materials appearing as Jensen Precast documents and the like are proprietary work product and are protected under U.S. copyright and other laws.
Unless in conjunction with business conducted with Jensen Precast, any use of Jensen Precast work product without express, written consent is prohibited, and recipient is prohibited from distributing any and all work product to non-approved third parties under penalty of civil action.

100002311.idw

BILL OF MATERIALS

ITEM	UNIT QTY	QTY	PART NUMBER	DESCRIPTION
1	1	4	200018691	FRAME BOLT DOUBLER SLOT
2	1	2	100007636	FRAME LATCH ANGLE - A36 - 4IN LONG
3	1	4	100007641	FRAME LIFTING BRACKET
4	1	2	200034253	Frame Component Steel Frame End, Adjustable Clevis Mount
5	1	2	200034254	Frame Component Steel Frame Side, Adjustable Clevis Mount
6	1	1	100007667	NAME PLATE FRAME ANGLE
7	1	4	100007863	NUT LEVELER 1/2-13 WELDABLE CAST STEEL
8	1	10	100007728	NUT SELF-CLINCH 1/2-13 S-0813-1 RAW

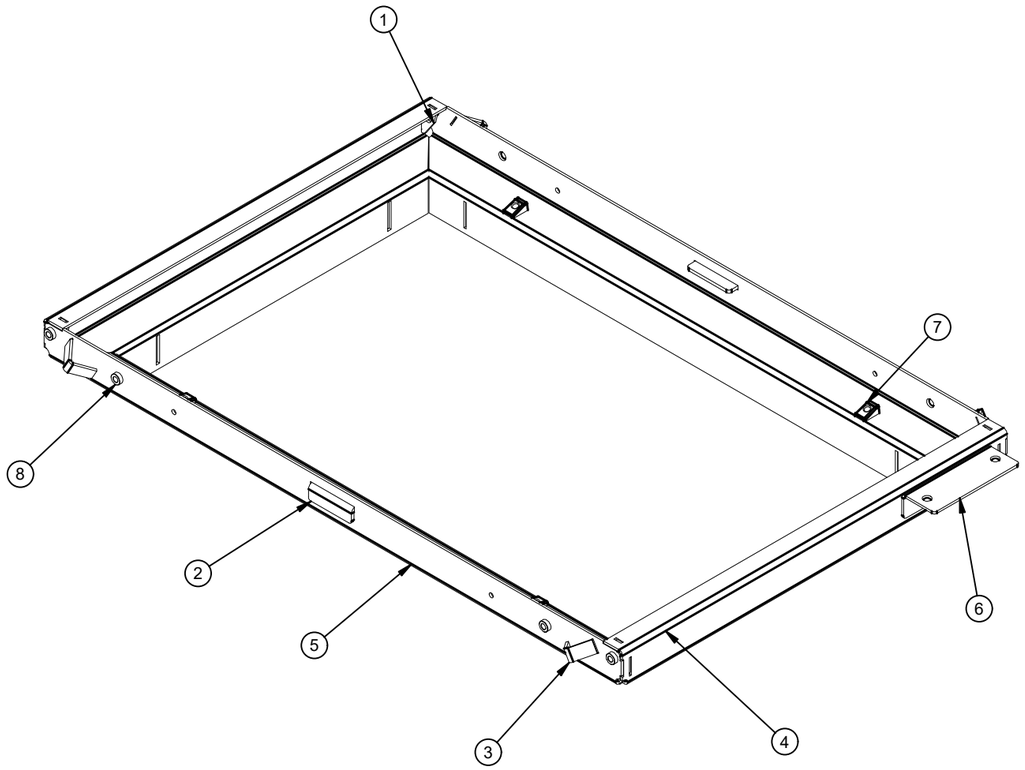

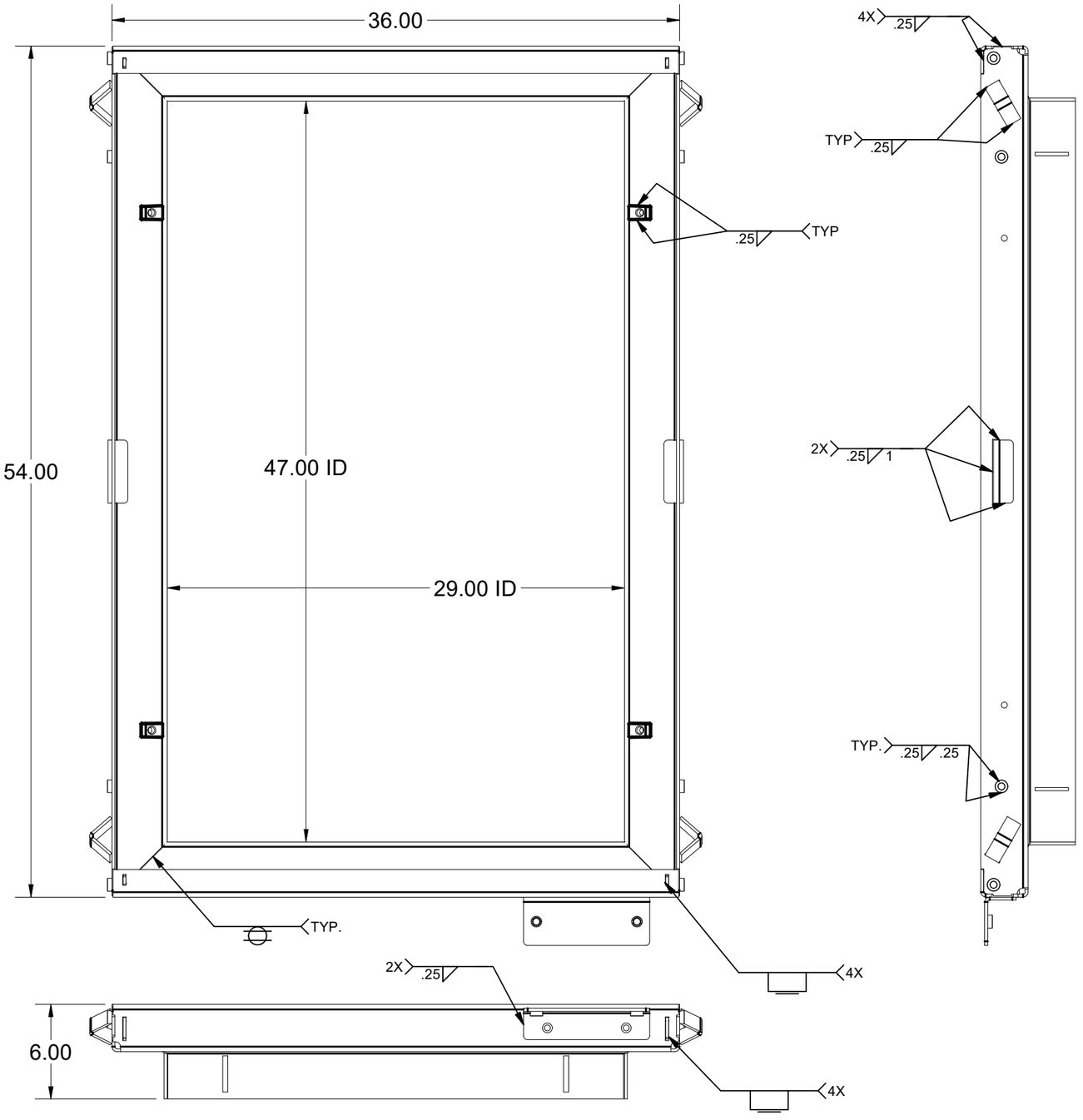

10000311.idw

MATERIAL FINISH: Raw	JENSEN METALTECH 450 E. GLENDALE AVE. SPARKS. NV 89431 775-352-2716 FAX: 755-358-8127 *JENSENMETALTECH.COM*	©2021 Jensen Precast- All rights reserved. All materials appearing as Jensen Precast documents and the like are proprietary work product and are protected under U.S. copyright and other laws. Unless in conjunction with business conducted with Jensen Precast, any use of Jensen Precast work product without express, written consent is prohibited, and recipient is prohibited from distributing any and all work product to non-approved third parties under penalty of civil action.	PART NUMBER & DESCRIPTION: 200034252 FAS-3048-AH4-R-OH06 — REV: B-1
MATERIAL SURFACE: Smooth			WEIGHT: 90.082 lbmass — DRAWN BY: CNATION — SHEET: 7
			CREATED: 4/17/2018 — MODIFIED: 7/22/2021

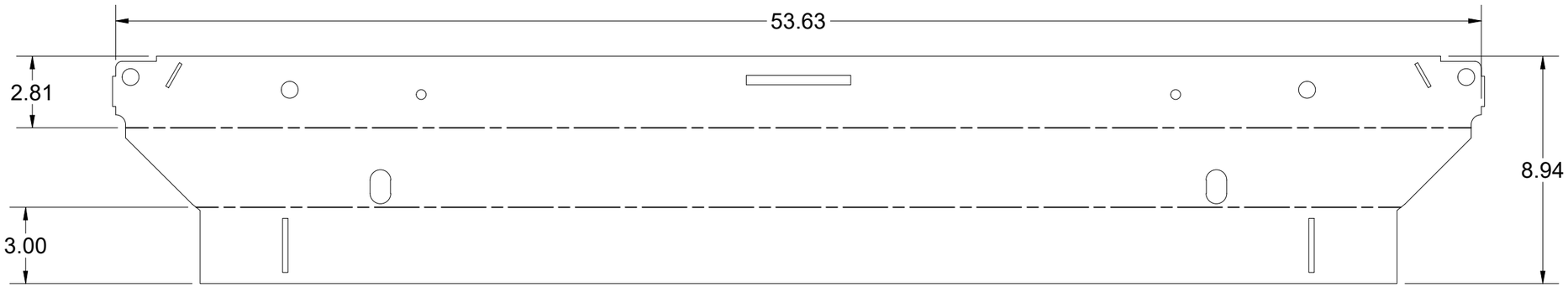

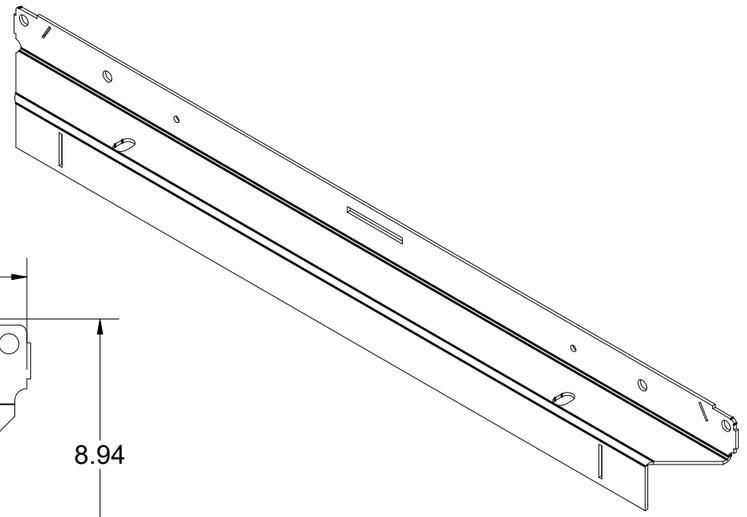

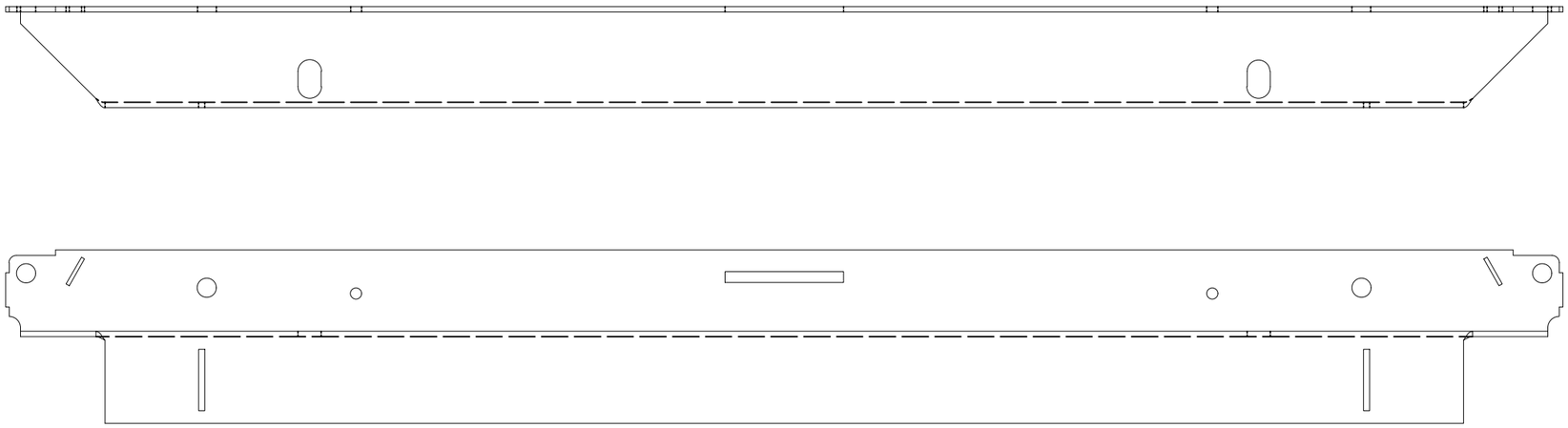

BEND TABLE			
BEND RADIUS	V-OPENING	BEND ANGLE	BEND DEDUCTION
0.125	2"	90	0.3750

MATERIAL IFS: 100007734

MATERIAL THK: 0.1875

MAT DESCRIPTION: STL ASTM A36 SM-HRPO 60X120 RAW .1875

JENSEN METALTECH
450 E. GLENDALE AVE. SPARKS. NV 89431
775-352-2716 FAX: 755-358-8127
JENSENMETALTECH.COM

©2021 Jensen Precast- All rights reserved.
All materials appearing as Jensen Precast documents and the like are proprietary work product and are protected under U.S. copyright and other laws.
Unless in conjunction with business conducted with Jensen Precast, any use of Jensen Precast work product without express, written consent is prohibited, and recipient is prohibited from distributing any and all work product to non-approved third parties under penalty of civil action.

NAME & DESCRIPTION: 200034254
Frame Component Steel Frame Side, Adjustable Clevis Mount

REV: B-1

WEIGHT: 24.036 lbmass

DRAWN BY: CNATION

CREATED: 11/26/2019

MODIFIED: 7/22/2021

SHEET: 8 OF 14

100002311.idw

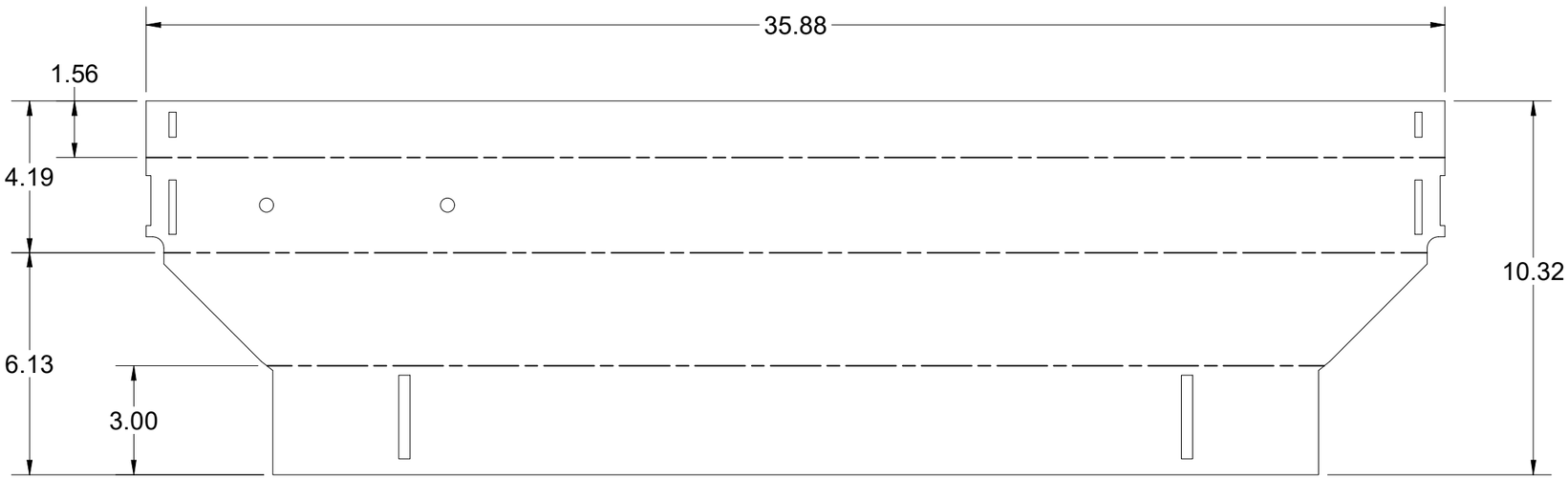

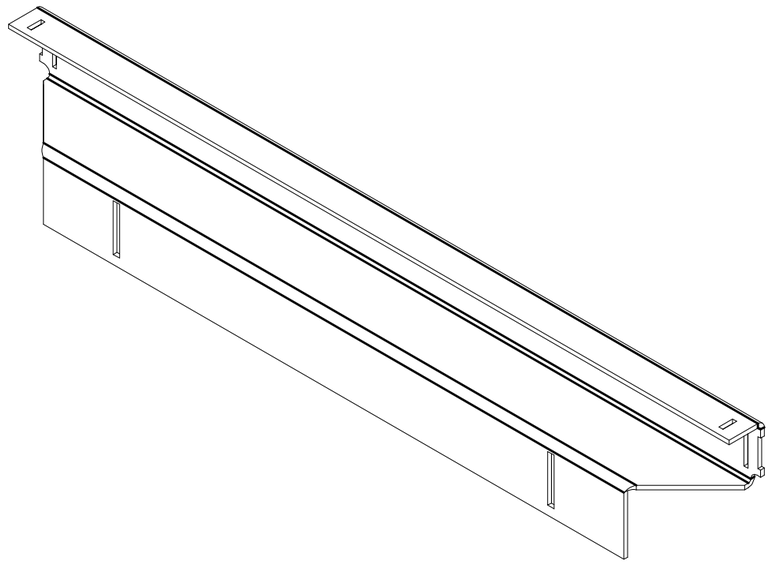



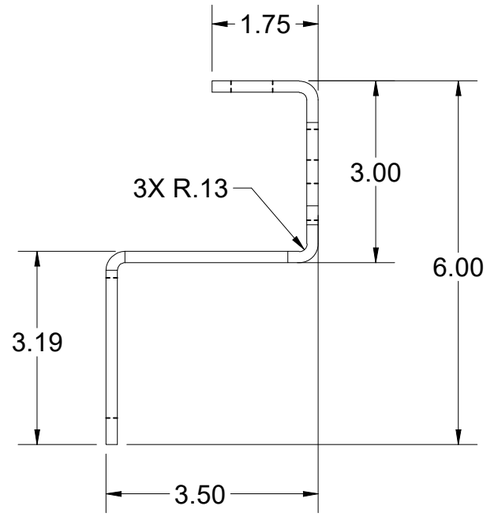

BEND TABLE			
BEND RADIUS	V-OPENING	BEND ANGLE	BEND DEDUCTION
0.125	2"	90	0.3750

MATERIAL IFS: 100007734

MATERIAL THK: 0.1875

MAT DESCRIPTION: STL ASTM A36 SM-HRPO 60X120 RAW .1875

JENSEN METALTECH
450 E. GLENDALE AVE. SPARKS. NV 89431
775-352-2716 FAX: 755-358-8127
JENSENMETALTECH.COM

©2021 Jensen Precast- All rights reserved.
All materials appearing as Jensen Precast documents and the like are proprietary work product and are protected under U.S. copyright and other laws.
Unless in conjunction with business conducted with Jensen Precast, any use of Jensen Precast work product without express, written consent is prohibited, and recipient is prohibited from distributing any and all work product to non-approved third parties under penalty of civil action.

NAME & DESCRIPTION: 200034253
Frame Component Steel Frame End, Adjustable Clevis Mount

REV: B-1

WEIGHT: 18.304 lbmass

DRAWN BY: CNATION

CREATED: 10/29/2018

MODIFIED: 7/22/2021

SHEET: 9 OF 14

100002311.idw

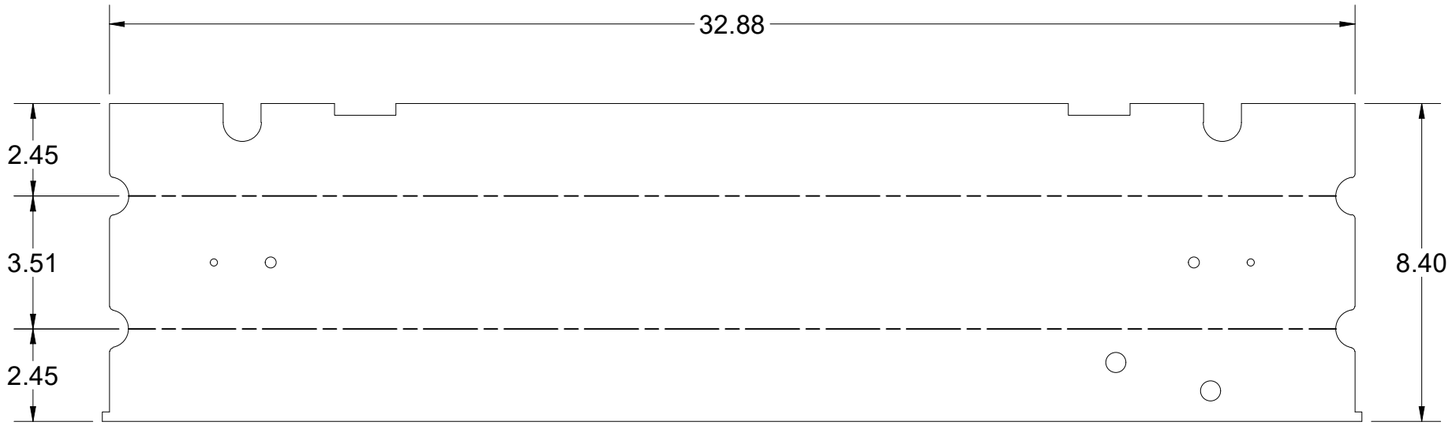

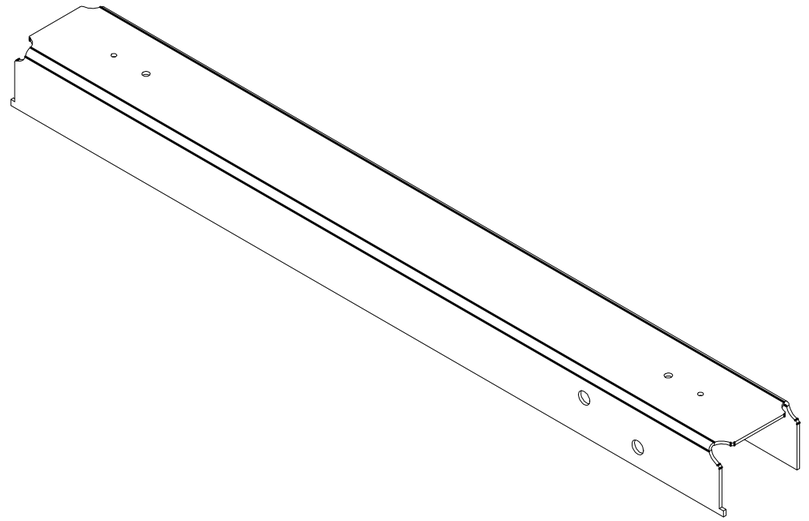

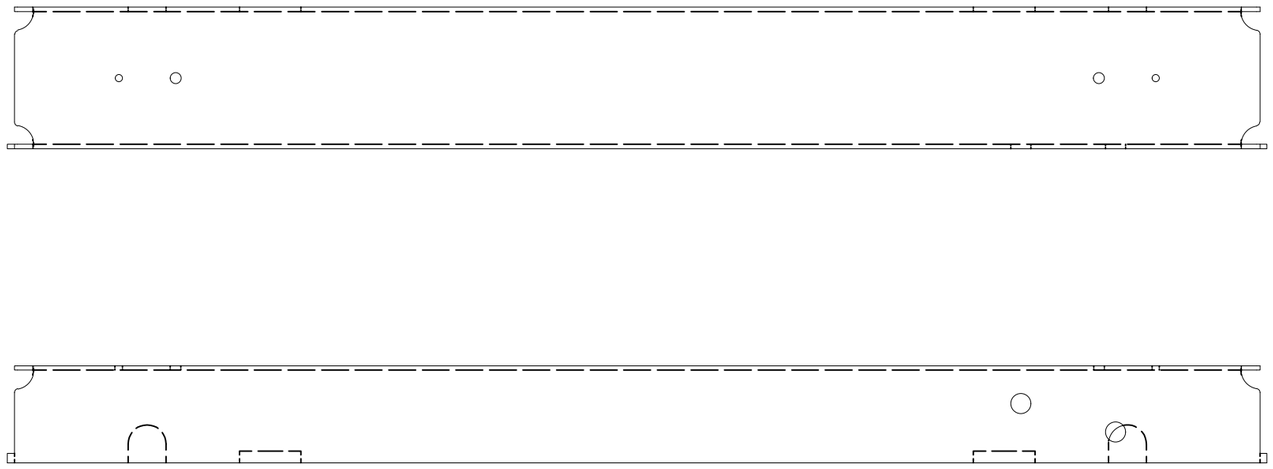

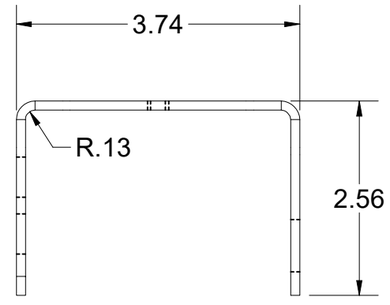

BEND TABLE				MATERIAL IFS: 100007840
BEND RADIUS	V-OPENING	BEND ANGLE	BEND DEDUCTION	MATERIAL THK: 0.1196
0.125	1"	90	0.2350	MAT DESCRIPTION: SHT STL GR80 GA-11 SM-HR RAW .1196

JENSEN METALTECH
450 E. GLENDALE AVE. SPARKS. NV 89431
775-352-2716 FAX: 755-358-8127
JENSENMETALTECH.COM

©2021 Jensen Precast- All rights reserved.
All materials appearing as Jensen Precast documents and the like are proprietary work product and are protected under U.S. copyright and other laws.
Unless in conjunction with business conducted with Jensen Precast, any use of Jensen Precast work product without express, written consent is prohibited, and recipient is prohibited from distributing any and all work product to non-approved third parties under penalty of civil action.

NAME & DESCRIPTION:	200052647 Door Component Steel Channel, Robot Door		REV:
WEIGHT:	9.273 lbmass	DRAWN BY: CNATION	SHEET: 10 OF 14
CREATED:	12/6/2018	MODIFIED: 7/22/2021	

100002311.idw

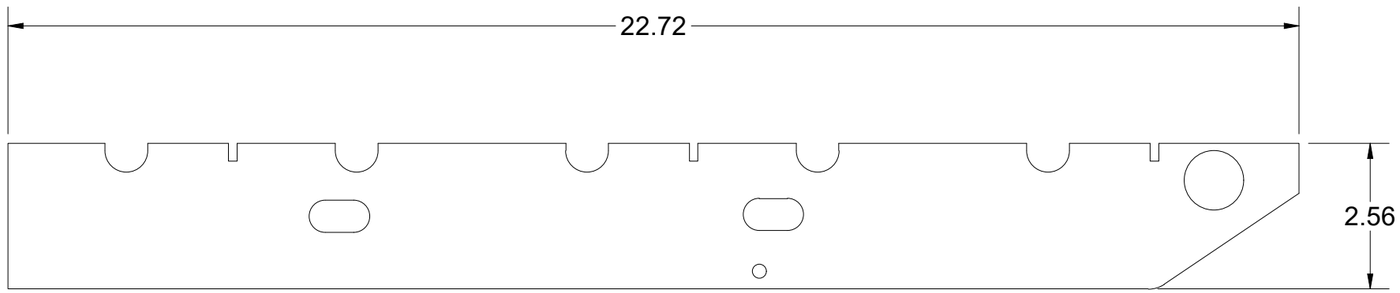

BEND TABLE				MATERIAL IFS: 100007735
BEND RADIUS	V-OPENING	BEND ANGLE	BEND DEDUCTION	MATERIAL THK: 0.25
-	-	-	-	MAT DESCRIPTION: STL ASTM A36 SM-HRPO RAW .250

JENSEN METALTECH
450 E. GLENDALE AVE. SPARKS. NV 89431
775-352-2716 FAX: 755-358-8127
JENSENMETALTECH.COM

©2021 Jensen Precast- All rights reserved.
All materials appearing as Jensen Precast documents and the like are proprietary work product and are protected under U.S. copyright and other laws.
Unless in conjunction with business conducted with Jensen Precast, any use of Jensen Precast work product without express, written consent is prohibited, and recipient is prohibited from distributing any and all work product to non-approved third parties under penalty of civil action.

NAME & DESCRIPTION:		REV:
200052648 Door Component Steel Side Bar, Robot Door		A-3
WEIGHT: 3.719 lbmass	DRAWN BY: CNATION	SHEET: 11 OF 14
CREATED: 11/26/2019	MODIFIED: 7/22/2021	

100002311.idw

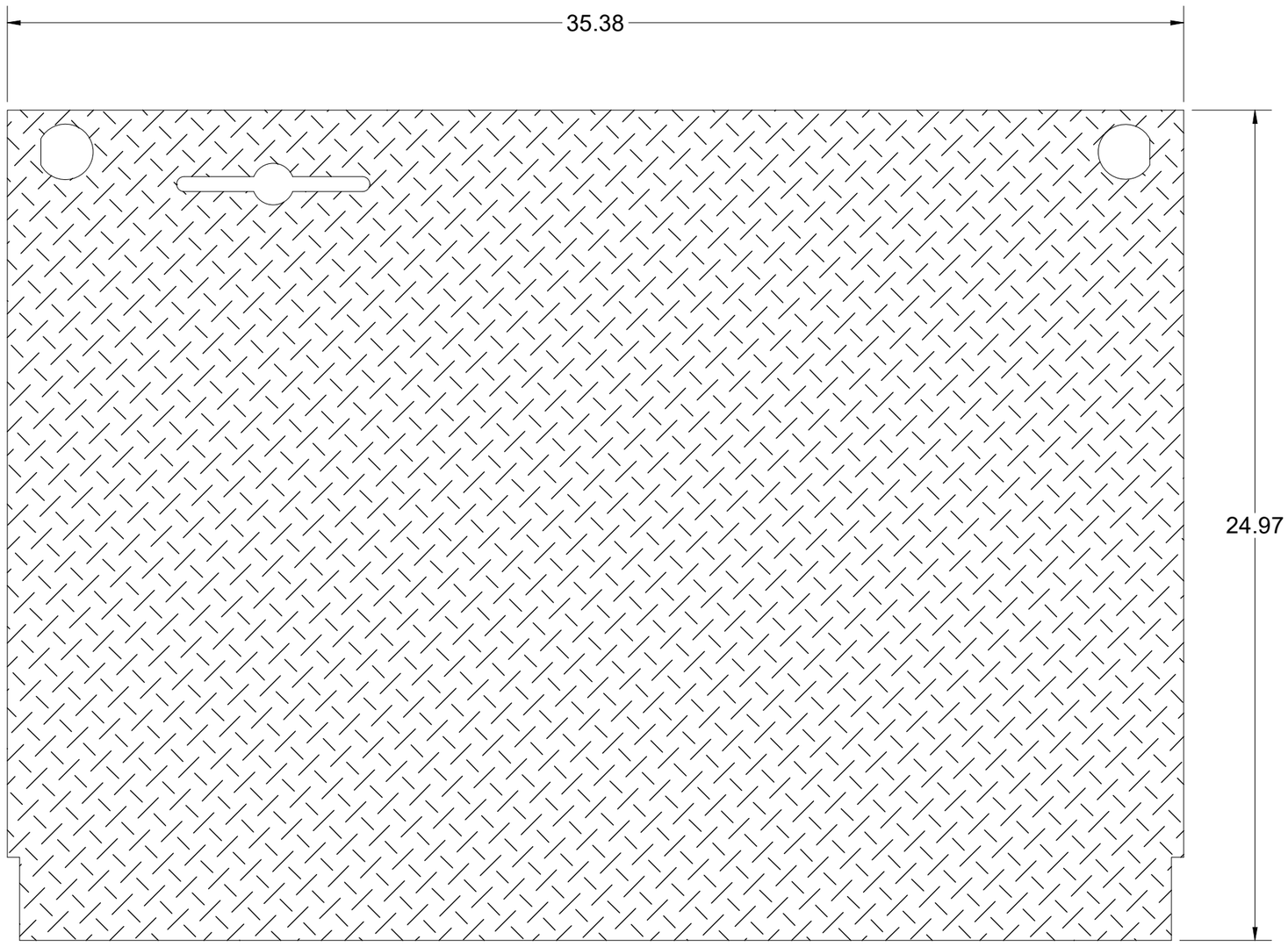

100002311.idw

BEND TABLE				MATERIAL IFS: 100007736
BEND RADIUS	V-OPENING	BEND ANGLE	BEND DEDUCTION	MATERIAL THK: 0.25
-	-	-	-	MAT DESCRIPTION: SHT STL CQ DP RAW .25

JENSEN METALTECH
450 E. GLENDALE AVE. SPARKS. NV 89431
775-352-2716 FAX: 755-358-8127
JENSENMETALTECH.COM

©2021 Jensen Precast- All rights reserved.
All materials appearing as Jensen Precast documents and the like are proprietary work product and are protected under U.S. copyright and other laws.
Unless in conjunction with business conducted with Jensen Precast, any use of Jensen Precast work product without express, written consent is prohibited, and recipient is prohibited from distributing any and all work product to non-approved third parties under penalty of civil action.

NAME & DESCRIPTION: 200052649 Door Component Steel Plate, Top, Robot Door		REV: A-5
WEIGHT: 68.341 lbmass	DRAWN BY: CNATION	SHEET: 12 OF 14
CREATED: 11/26/2019	MODIFIED: 7/22/2021	

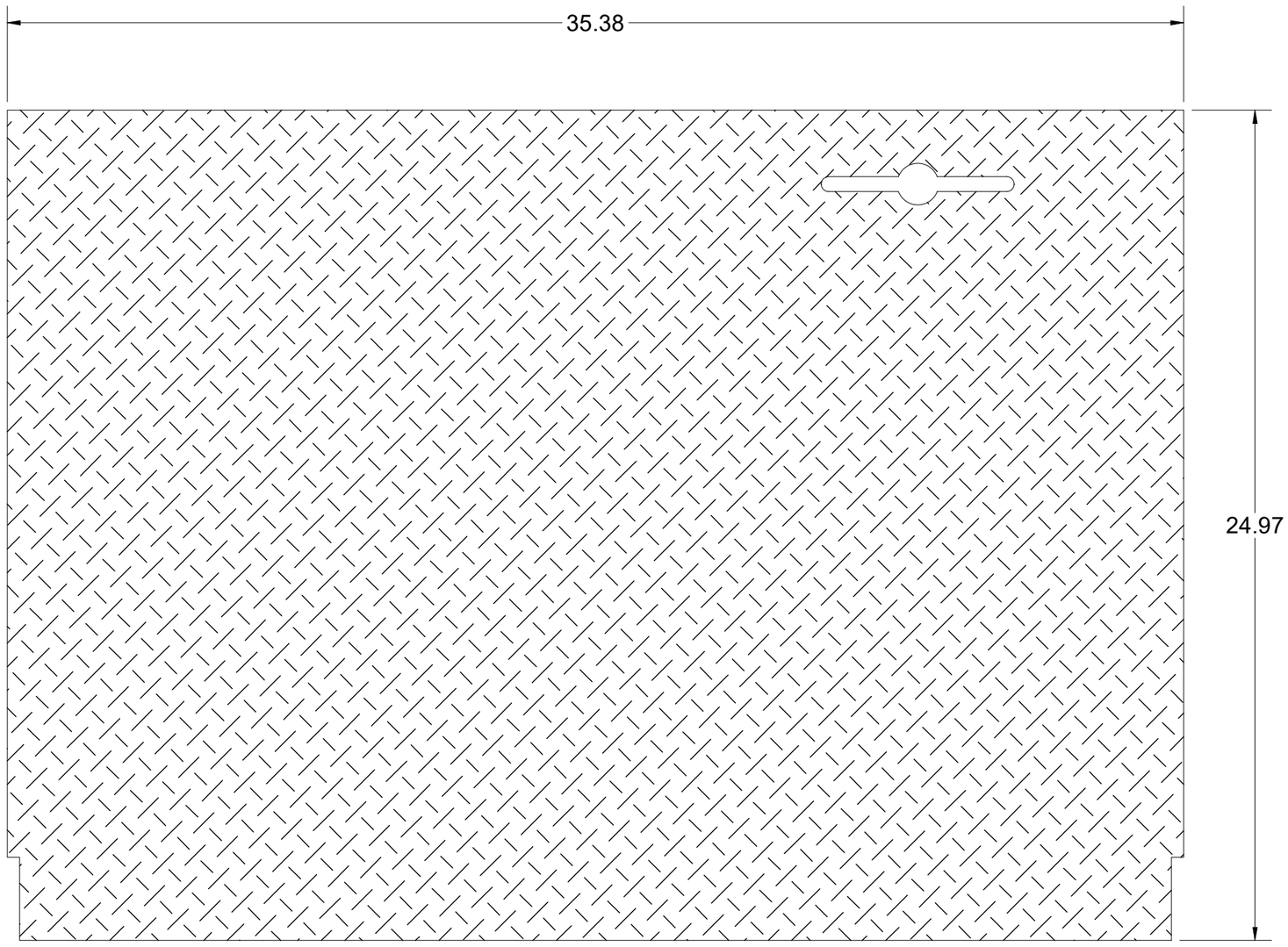

100002311.idw

BEND TABLE				MATERIAL IFS: 100007736
BEND RADIUS	V-OPENING	BEND ANGLE	BEND DEDUCTION	MATERIAL THK: 0.25
-	-	-	-	MAT DESCRIPTION: SHT STL CQ DP RAW .25

JENSEN METALTECH
450 E. GLENDALE AVE. SPARKS. NV 89431
775-352-2716 FAX: 755-358-8127
JENSENMETALTECH.COM

©2021 Jensen Precast- All rights reserved.
All materials appearing as Jensen Precast documents and the like are proprietary work product and are protected under U.S. copyright and other laws.
Unless in conjunction with business conducted with Jensen Precast, any use of Jensen Precast work product without express, written consent is prohibited, and recipient is prohibited from distributing any and all work product to non-approved third parties under penalty of civil action.

NAME & DESCRIPTION: 200052687 Door Component Steel Plate, Bottom,Robot Door		REV: A-4
WEIGHT: 68.671 lbmass	DRAWN BY: CNATION	SHEET: 13 OF 14
CREATED: 11/26/2019	MODIFIED: 7/22/2021	

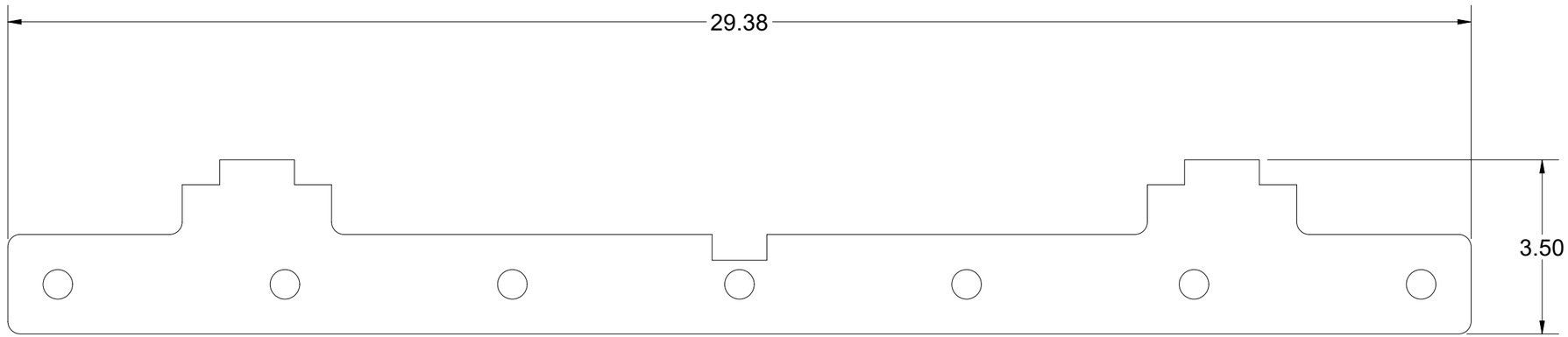

100002311.idw

BEND TABLE				MATERIAL IFS: 100007735
BEND RADIUS	V-OPENING	BEND ANGLE	BEND DEDUCTION	MATERIAL THK: 0.25
-	-	-	-	MAT DESCRIPTION: STL ASTM A36 SM-HRPO RAW .250

JENSEN METALTECH
450 E. GLENDALE AVE. SPARKS. NV 89431
775-352-2716 FAX: 755-358-8127
JENSENMETALTECH.COM

©2021 Jensen Precast- All rights reserved.
All materials appearing as Jensen Precast documents and the like are proprietary work product and are protected under U.S. copyright and other laws.
Unless in conjunction with business conducted with Jensen Precast, any use of Jensen Precast work product without express, written consent is prohibited, and recipient is prohibited from distributing any and all work product to non-approved third parties under penalty of civil action.

NAME & DESCRIPTION: 200052895 Door Component Steel Lap Bar, Robot Door		REV: A-3
WEIGHT: 4.523 lbmass	DRAWN BY: CNATION	SHEET: 14 OF 14
CREATED: 5/17/2021	MODIFIED: 7/22/2021	