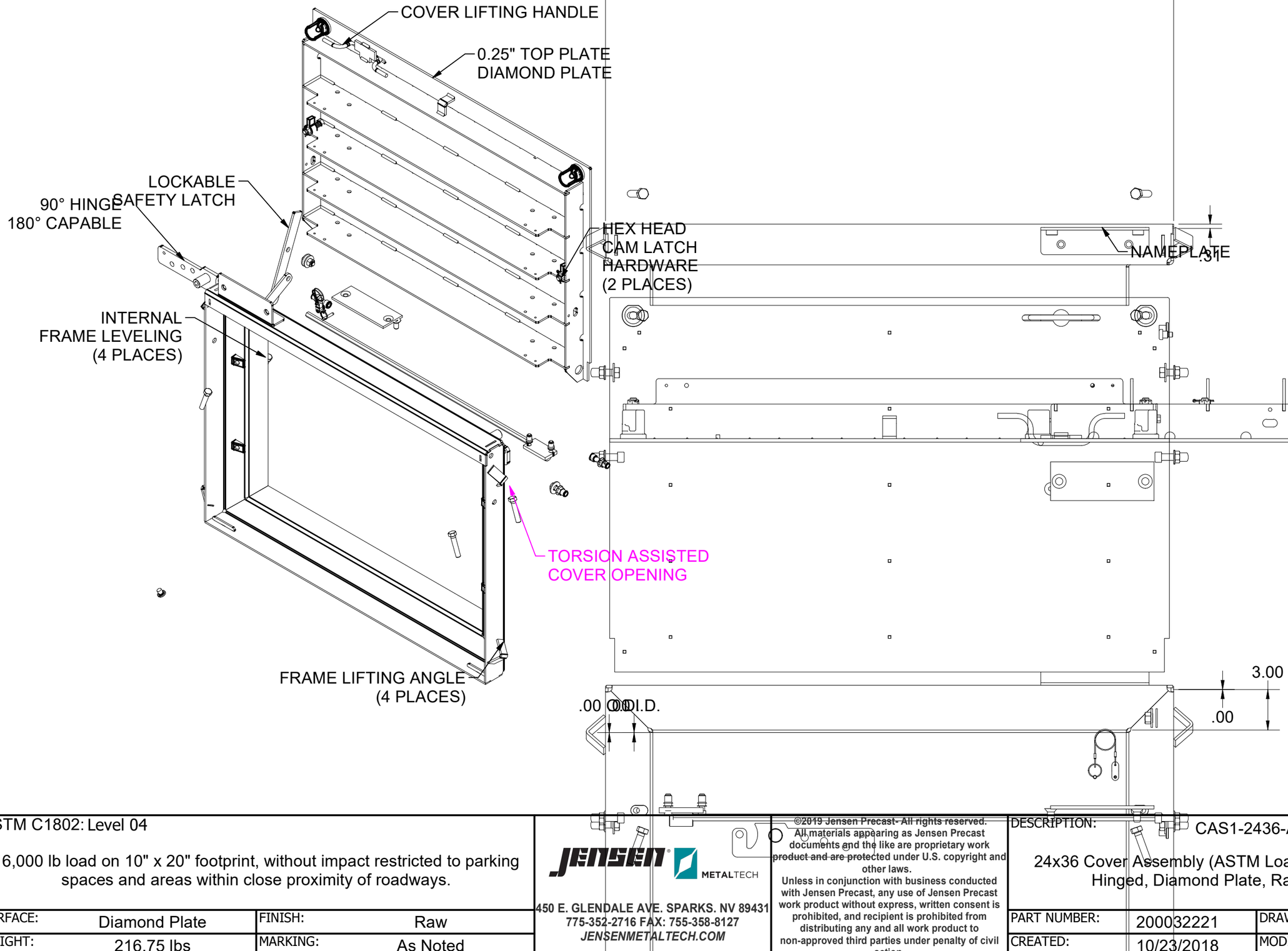

ASTM C1802: Level 04

16,000 lb load on 10" x 20" footprint, without impact restricted to parking spaces and areas within close proximity of roadways.

SURFACE:	Diamond Plate	FINISH:	Raw
WEIGHT:	216.75 lbs	MARKING:	As Noted

JENSEN METALTECH
450 E. GLENDALE AVE. SPARKS. NV 89431
775-352-2716 FAX: 755-358-8127
JENSENMETALTECH.COM

©2019 Jensen Precast- All rights reserved.
All materials appearing as Jensen Precast documents and the like are proprietary work product and are protected under U.S. copyright and other laws.
Unless in conjunction with business conducted with Jensen Precast, any use of Jensen Precast work product without express, written consent is prohibited, and recipient is prohibited from distributing any and all work product to non-approved third parties under penalty of civil action.

DESCRIPTION: CAS1-2436-AH4-DB-R-OH06

24x36 Cover Assembly (ASTM Load Level 04, 1 Door, Steel, Hinged, Diamond Plate, Raw , , N/A) OH 06

PART NUMBER:	200032221	DRAWN BY:	K. Aguilar
CREATED:	10/23/2018	MODIFIED:	1/25/2023

REV:

SHEET: 1

BILL OF MATERIALS

ITEM	UNIT QTY	QTY	PART NUMBER	DESCRIPTION	PART NAME
1	1	1	200012852	FAS-2436-AH4-R-OH06	200012852
2	1	1	200032222	DAS1-T-2436-H4-DP-R	200032222
3	1	1	100007659	Hinge Assembly, Left, 1/2, Steel	100007659
4	1	1	100007666	Hinge Assembly, Right, Steel	100007666
5	1	1	100007933	SAFETY LATCH ASSY FOR UNI AND 90 D HINGE	100007933
6	1	1	100007671	SPRING MOUNT ASSY .500	100007671
7	1	2	100007729	HEX NUT SLOTTED CASTLE HEAD 1/2-13 SS	100007729
8	1	4	100005059	BOLT HEX 1/2-13 UNC 2.5 ZINC	100005059
9	1	2	100007918	COTTER PIN 0.094DIA X 1-1/4	100007918
10	1	2	100007857	NUT FINGER 1/2-13 BRASS	100007857
11	1	2	100007915	SPRING COMPRESSION 055 X 5/8 X 7/8 LONG	100007915
12	1	1	100007876	Bolt Shoulder Socket Head - 3/8-16 UNC - SD-0.5" - SL-0.3125" - Grade 5 - Zinc	100007876
13	1	4	100002657	Flat Washer - 1/2 - wide - Type A - Zinc	100002657
14	1	1	100007492	HEX NUT NYLOCK - 1/2-13 UNC - GR5 - ZINC	100007492
15	1	2	100003823	Hex Bolt 1/2-13 UNC ZINC - PT - 1.5"	100003823
16	1	4	100007939	CAP VINYL .467 X 1/2	100007939
17	1	2	100007869	BOLT SHCS 1/2-13 X 1-3/4 SS	100007869
18	1	2	100007733	Bolt Socket Flat Countersunk Head - 1/2-13 UNC - Grade 5 - Zinc - FT - 1"	100007733
19	1	1	100007924	LANYARD 3/64 W/PIN COATED SS	100007924
20	1	1	100007882	Rivet Blind Grip .1875" Large Domed Head Range-0.376-0.5" Steel	100007882
21	1	2	100007859	RIVET NUT 3/8-16 FLAT KNURLED	100007859
22	1	2	100007873	BOLT SOCKET CAP - 3/8-16 UNC - 1.25 - ZINC	100007873
23	1	2	100011407	Hex Bolt 1/2-13 UNC ZINC - PT - 2.25"	100011407
24	1	1	100007391	NAME PLATE STEEL - BLANK	100007391
25	1	1	100007727	TORSION HEX ROD .5 x 36in RAW	100007727
26	1	4	100026256	LOW-STRENGTH STEEL FLANGE NUT, 1/2" - 13 THREAD SIZE	100026256
44	0.087 lbm ass	0.175 lbm ass	100007734	Frame Slam Latch Catch Plate - A36 - 0.41" Overhang	200080115
45	8.724 lbm ass	34.897 lbm ass	100007734	Door Component Steel Stiffener, Plate	200102892
46	5.319 lbm ass	5.319 lbm ass	100007734	Door Component Steel Stiffener, Bar	200102906

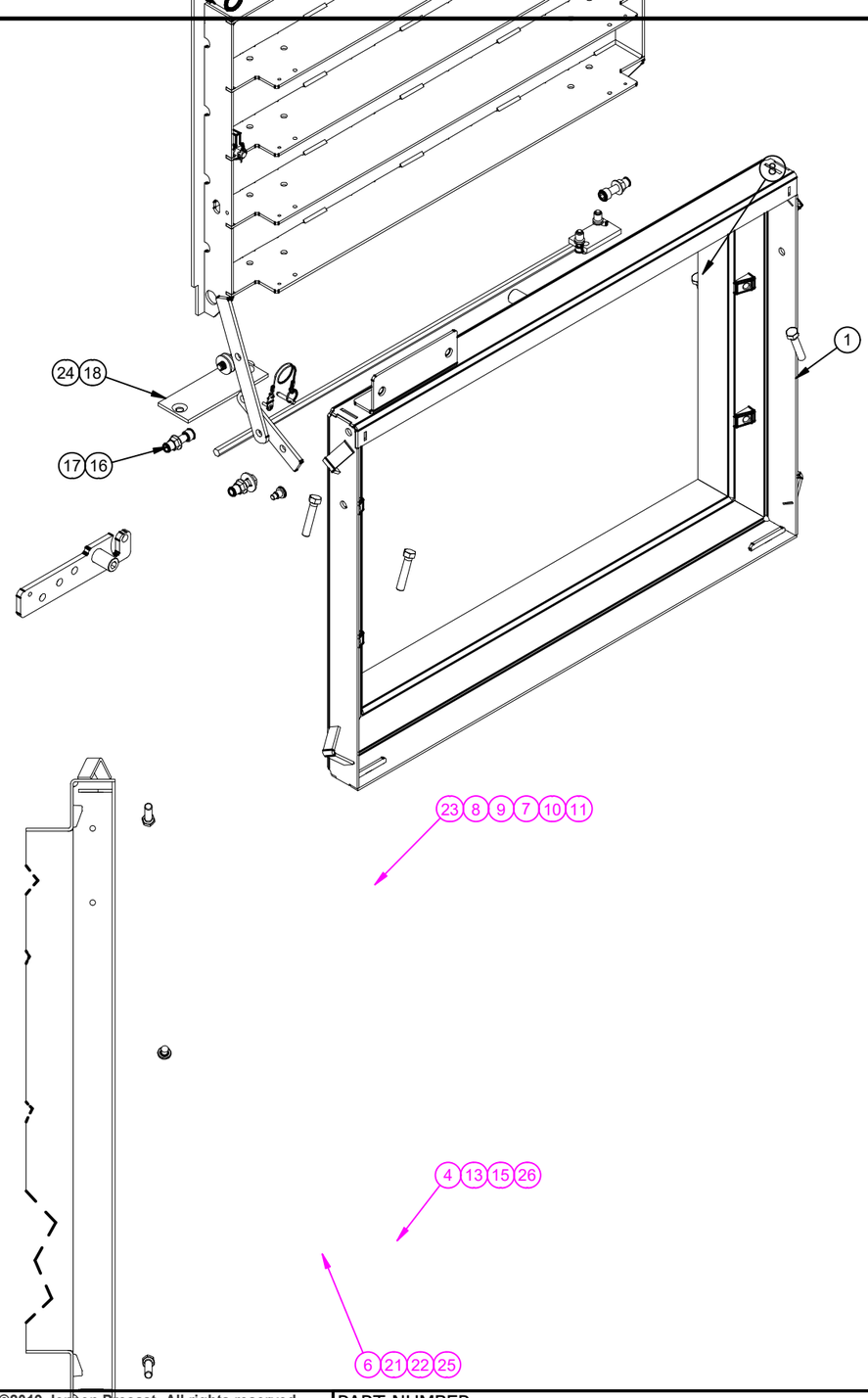

200032221.idw

MATERIAL FINISH: Raw	JENSEN METALTECH 450 E. GLENDALE AVE. SPARKS. NV 89431 775-352-2716 FAX: 755-358-8127 *JENSENMETALTECH.COM*	©2019 Jensen Precast- All rights reserved. All materials appearing as Jensen Precast documents and the like are proprietary work product and are protected under U.S. copyright and other laws. Unless in conjunction with business conducted with Jensen Precast, any use of Jensen Precast work product without express, written consent is prohibited, and recipient is prohibited from distributing any and all work product to non-approved third parties under penalty of civil action.	PART NUMBER & DESCRIPTION: 200032221 CAS1-2436-AH4-DP-R-OH06 — REV: D-1
MATERIAL SURFACE: Diamond Plate			WEIGHT: N/A — DRAWN BY: K. Aguilar — SHEET: 2
			CREATED: 10/23/2018 — MODIFIED: 1/25/2023

BURN LIST - BOM

PART NAME	PART NUMBER	ITEM QTY	DESCRIPTION	STOCK NUMBER	MATERIAL	MASS	SHEET
100007933	100007933	1	SAFETY LATCH ASSY FOR UNI AND 90 D HINGE			1.492 lbmass	06
200032226	100007734	2	Door Component Steel Side Bar	100007734	STL ASTM A36 SM-HRPO 60X120 RAW .1875	3.197 lbmass	11
100007644	100007644	1	LEAF PULL HANDLE A36 3/8IN DIAMETER		SHT 304SS SM RAW 3/8	0.021 kg	12
200012856	100007734	1	Frame Component Steel Frame Side Left, Adjustable	100007734	STL ASTM A36 SM-HRPO 60X120 RAW .1875	12.620 lbmass	
200012855	100007734	1	Frame Component Steel Frame Side Right, Adjustable	100007734	STL ASTM A36 SM-HRPO 60X120 RAW .1875	12.620 lbmass	
	100007924	1	LANYARD 3/64 W/PIN COATED SS		Generic	0.000 lbmass	
100011407	100011407	2	Hex Bolt 1/2-13 UNC ZINC - PT - 2.25"		Steel, Mild	0.178 lbmass	
100007423	100007423	1	NAME PLATE RAW	100007735	STL ASTM A36 SM-HRPO RAW .250	1.530 lbmass	
100007641	100007641	4	FRAME LIFTING BRACKET	100007734	STL ASTM A36 SM-HRPO 60X120 RAW .1875	0.198 lbmass	
100007647	100007647	1	LIFTING BRACKET STEEL LEAF	100007735	STL ASTM A36 SM-HRPO RAW .250	0.188 lbmass	
100026256	100026256	4	LOW-STRENGTH STEEL FLANGE NUT, 1/2" - 13 THREAD SIZE		Steel	0.047 lbmass	
200080115	100007734	2	Frame Slam Latch Catch Plate - A36 - 0.41" Overhang	100007734	STL ASTM A36 SM-HRPO 60X120 RAW .1875	0.087 lbmass	
200102892	100007734	4	Door Component Steel Stiffener, Plate	100007734	STL ASTM A36 SM-HRPO 60X120 RAW .1875	8.724 lbmass	
200102906	100007734	1	Door Component Steel Stiffener, Bar	100007734	STL ASTM A36 SM-HRPO 60X120 RAW .1875	5.319 lbmass	
100007873	100007873	2	BOLT SOCKET CAP - 3/8-16 UNC - 1.25 - ZINC		Steel, Mild	0.060 lbmass	
100007496	100007496	2	HEX NUT NYLOCK - 3/8-16 UNC - ZINC		Steel, Mild	0.023 lbmass	
	100007726	1	TORSION HEX ROD 7/16 X 36 RAW		Steel	1.692 lbmass	
100011418	100011418	4	WASHER FLAT 1/2 NARROW ZINC		Steel, Mild	0.024 lbmass	

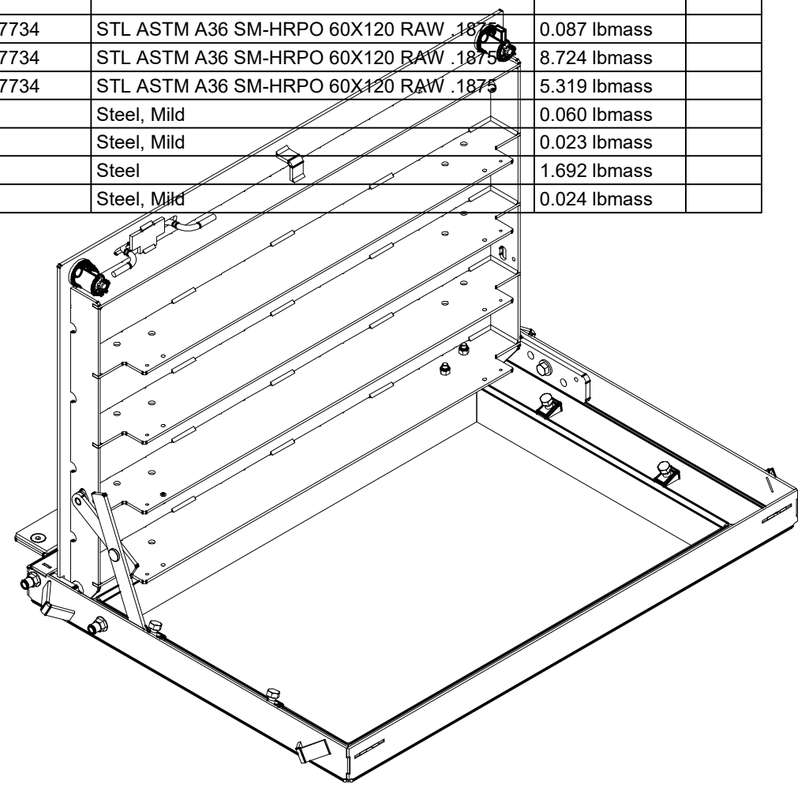

200032221.idw

MATERIAL FINISH: Raw

MATERIAL SURFACE: Diamond Plate

JENSEN METALTECH
450 E. GLENDALE AVE. SPARKS. NV 89431
775-352-2716 FAX: 755-358-8127
JENSENMETALTECH.COM

©2019 Jensen Precast- All rights reserved.
All materials appearing as Jensen Precast documents and the like are proprietary work product and are protected under U.S. copyright and other laws.
Unless in conjunction with business conducted with Jensen Precast, any use of Jensen Precast work product without express, written consent is prohibited, and recipient is prohibited from distributing any and all work product to non-approved third parties under penalty of civil action.

PART NUMBER & DESCRIPTION: 100002310 CAS1-2436-AH4-DP-G-CL-OH06

REV: D-2

WEIGHT: N/A

DRAWN BY: K. Aguilar

CREATED: 2/21/2020

MODIFIED: 1/25/2023

SHEET: 3

BILL OF MATERIALS

ITEM	UNIT QTY	QTY	PART NUMBER	DESCRIPTION	PART NAME
1	88.781 lbmass	88.781 lbmass	100007736	Door Component Steel Plate, Top	200032223
2	3.197 lbmass	6.393 lbmass	100007734	Door Component Steel Side Bar	200032226
5	1	1	100007644	LEAF PULL HANDLE A36 3/8IN DIAMETER	100007644
6	1	1	100007646	HANDLE RETAINER STL	100007646
7	1	2	100007970	CAM TOWER CAST STEEL	100007970
8	1	1	100007647	LIFTING BRACKET STEEL LEAF	100007647
3	8.724 lbmass	34.897 lbmass	100007734	Door Component Steel Stiffener, Plate	200102892
4	5.319 lbmass	5.319 lbmass	100007734	Door Component Steel Stiffener, Bar	200102906

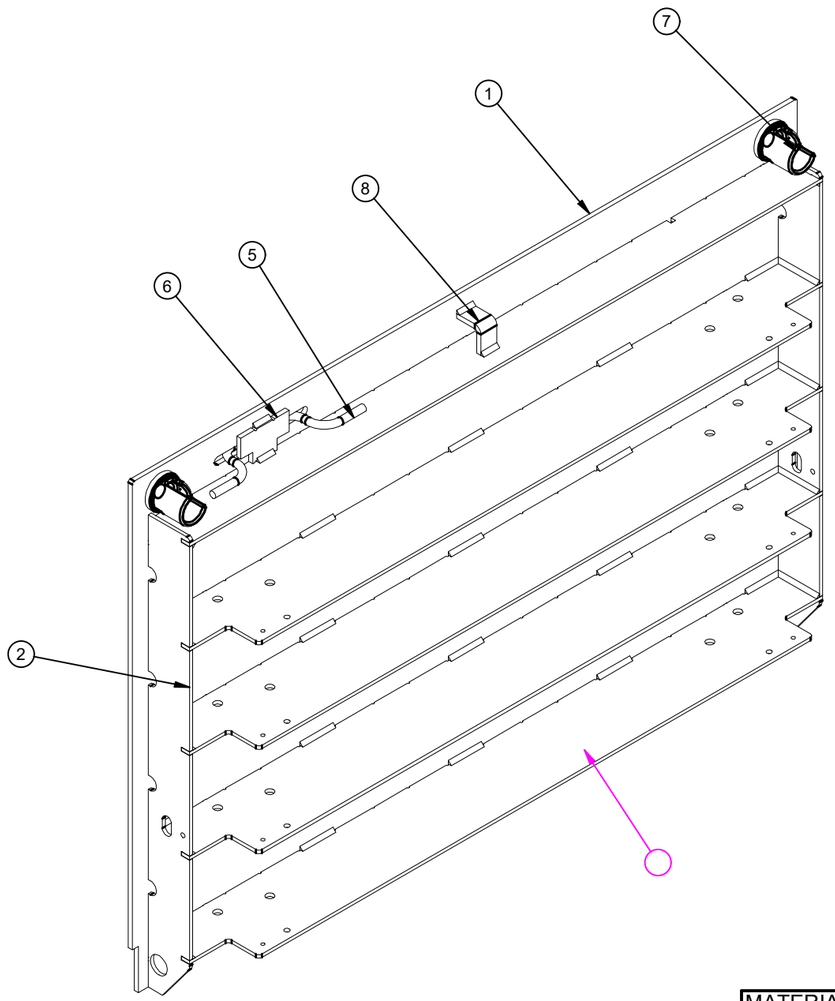

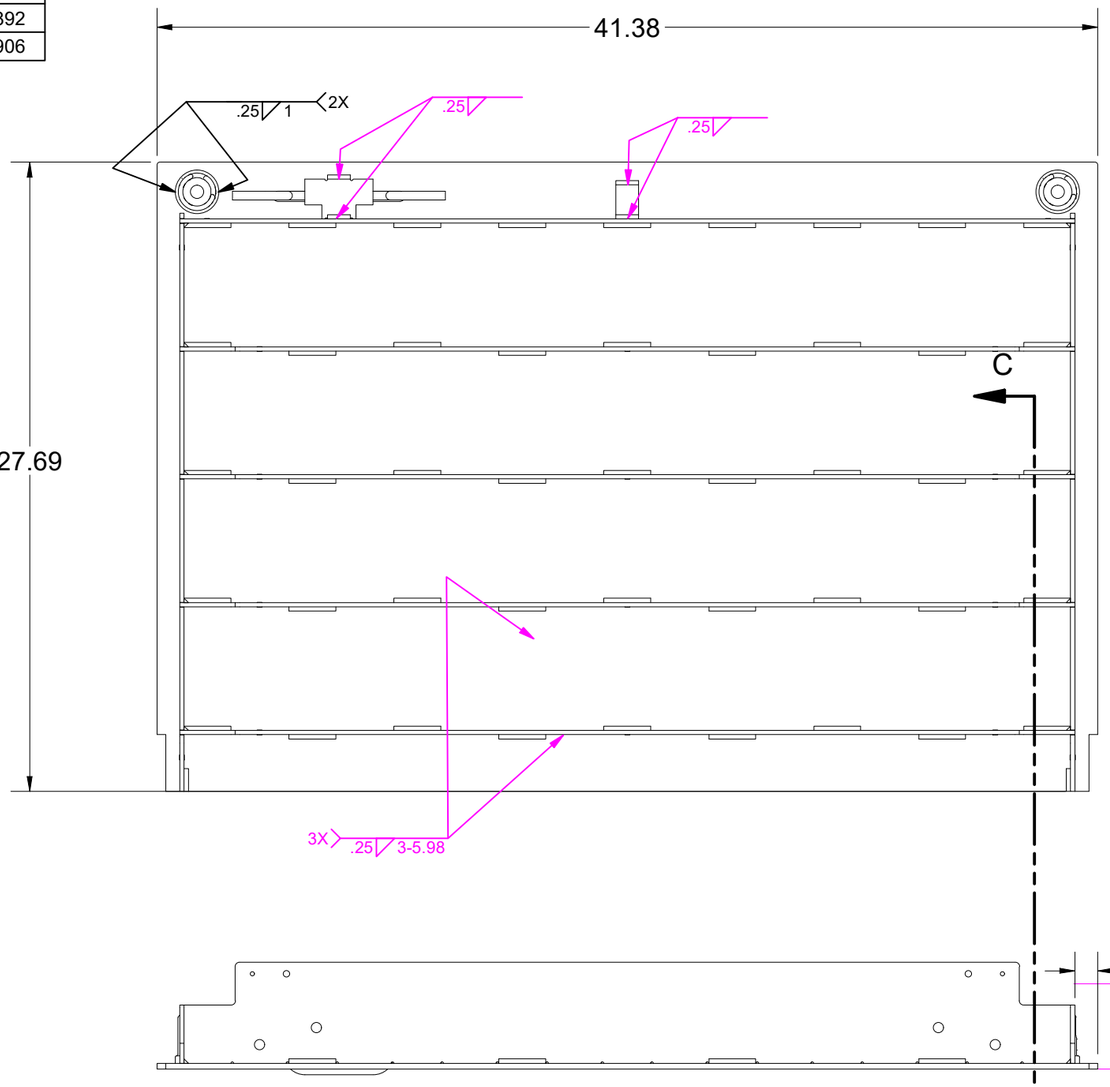

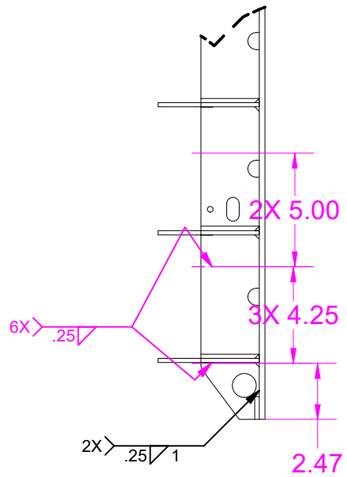

SECTION C-C

MATERIAL FINISH: Raw	JENSEN METALTECH 450 E. GLENDALE AVE. SPARKS. NV 89431 775-352-2716 FAX: 755-358-8127 *JENSENMETALTECH.COM*	©2019 Jensen Precast- All rights reserved. All materials appearing as Jensen Precast documents and the like are proprietary work product and are protected under U.S. copyright and other laws. Unless in conjunction with business conducted with Jensen Precast, any use of Jensen Precast work product without express, written consent is prohibited, and recipient is prohibited from distributing any and all work product to non-approved third parties under penalty of civil action.	PART NUMBER & DESCRIPTION: C 200032222 DAS1-T-2436-H4-DP-R-CL	REV:
MATERIAL SURFACE: Diamond Plate			WEIGHT: 137.773 lbmass / DRAWN BY: K. Aguilar	SHEET: 4
			CREATED: 11/8/2019 / MODIFIED: 1/25/2023	

200032221.idw

BILL OF MATERIALS

ITEM	UNIT QTY	QTY	PART NUMBER	DESCRIPTION	PART NAME
1	12.620 lbmass	12.620 lbmass	100007734	Frame Component Steel Frame Side Left, Adjustable	200012856
2	12.620 lbmass	12.620 lbmass	100007734	Frame Component Steel Frame Side Right, Adjustable	200012855
3	21.796 lbmass	21.796 lbmass	100007734	Frame Component Steel Frame End, Adjustable	200012854
4	18.523 lbmass	18.523 lbmass	100007734	Frame Component Steel Frame Front, Adjustable	200012853
5	1	2	200018691	FRAME BOLT DOUBLER SLOT	200018691
7	1	4	100007863	NUT LEVELER 1/2-13 WELDABLE CAST STEEL	100007863
8	1	1	100007667	NAME PLATE FRAME ANGLE	100007667
9	1	2	100007728	NUT SELF-CLINCH 1/2-13 S-0813-1 RAW	100007728
10	1	4	100007641	FRAME LIFTING BRACKET	100007641
6	0.087 lbmass	0.175 lbmass	100007734	Frame Slam Latch Catch Plate - A36 - 0.41" Overhang	200080115

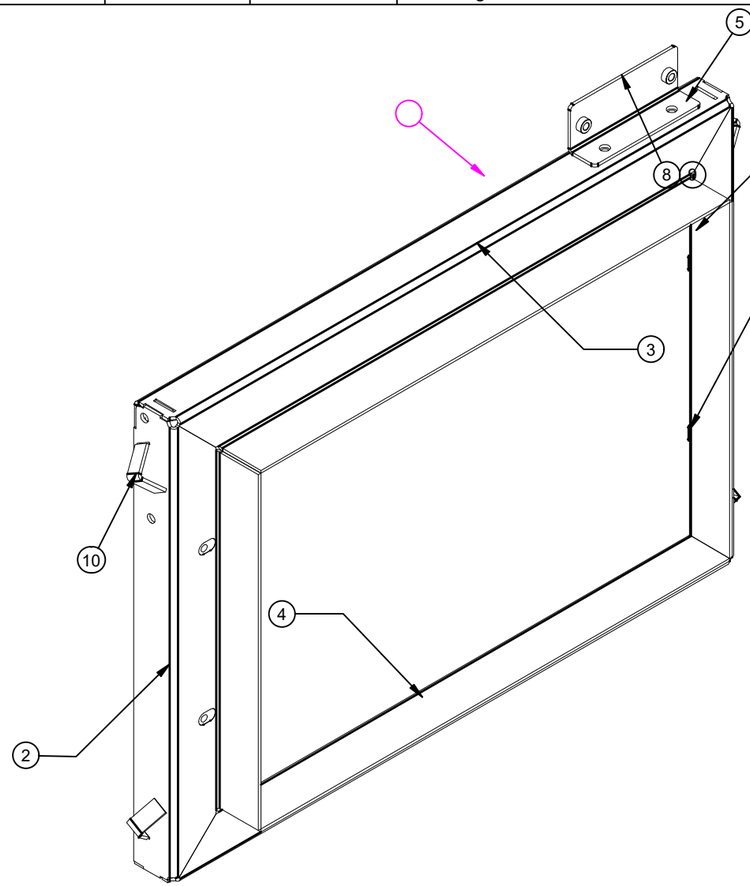

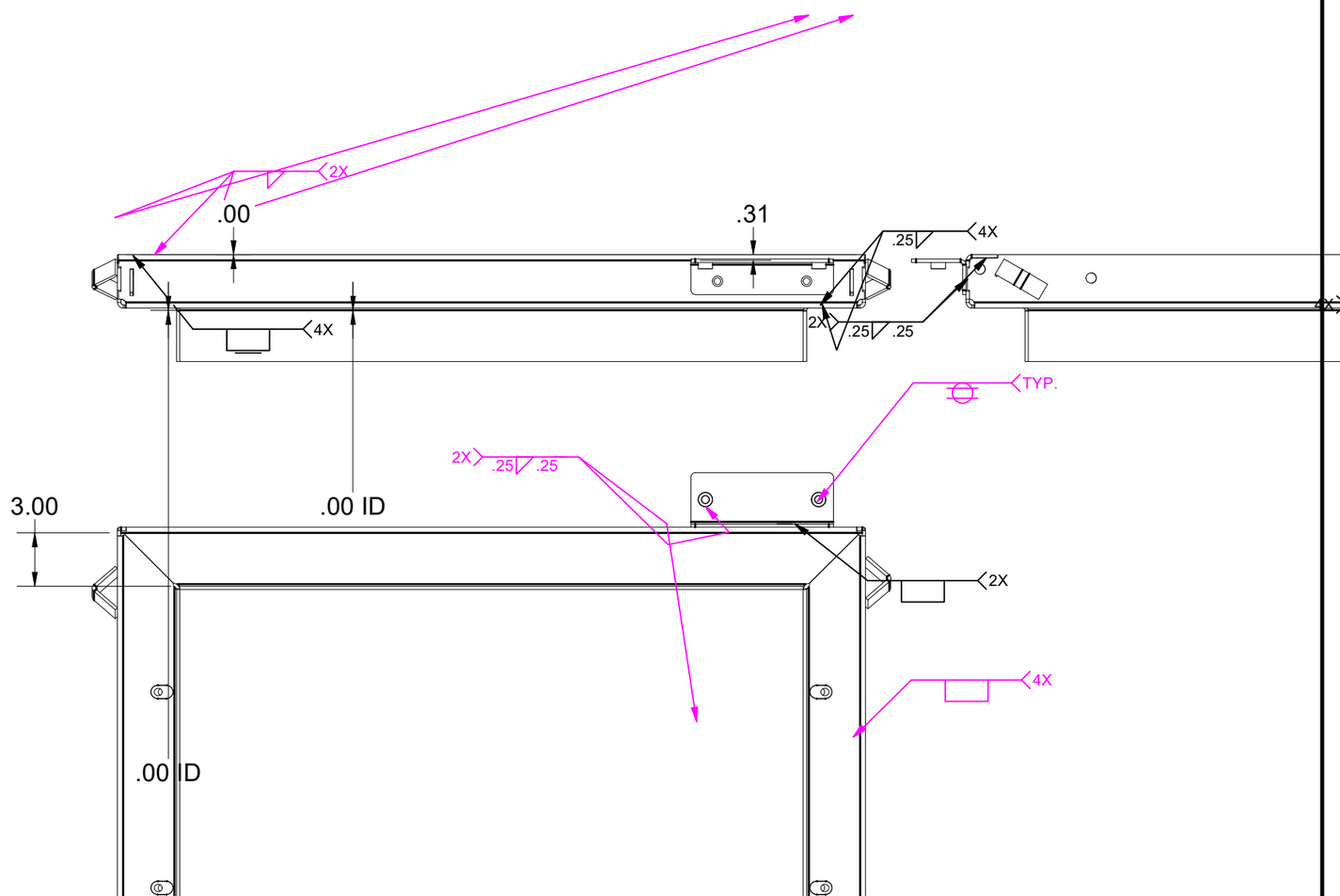

200032221.idw

MATERIAL FINISH: Raw	JENSEN NETALTECH	©2019 Jensen Precast- All rights reserved. All materials appearing as Jensen Precast documents and the like are proprietary work product and are protected under U.S. copyright and other laws. Unless in conjunction with business conducted with Jensen Precast, any use of Jensen Precast work product without express, written consent is prohibited, and recipient is prohibited from distributing any and all work product to non-approved third parties under penalty of civil action.	PART NUMBER & DESCRIPTION: 200012852 FAS-2436-AH4-R-OH06		REV:
MATERIAL SURFACE: Diamond Plate Smooth	450 E. GLENDALE AVE. SPARKS. NV 89431 775-352-2716 FAX: 775-358-8127 *JENSENMETALTECH.COM*		WEIGHT: 69.471 lbmass	DRAWN BY: K. Aguilar	SHEET: 5
			CREATED: 10/23/2018	MODIFIED: 1/25/2023	

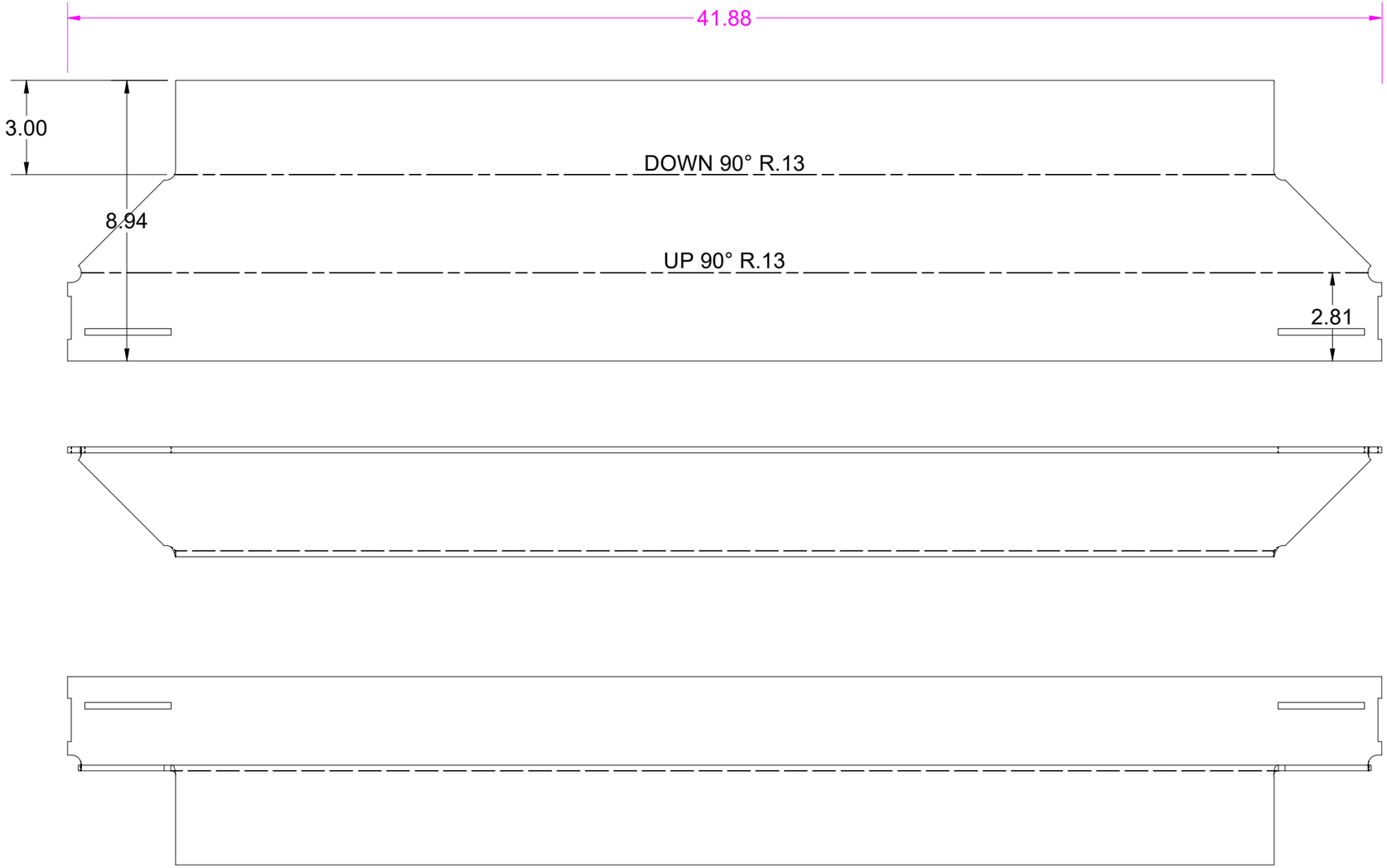

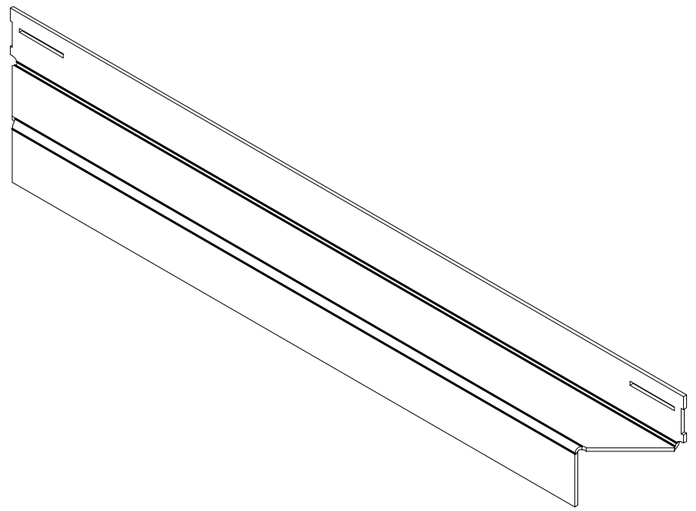

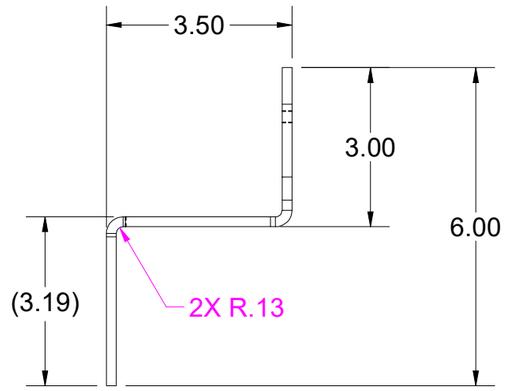

200032221.idw

BEND TABLE			
BEND RADIUS	V-OPENING	BEND ANGLE	BEND DEDUCTION
0.125	2	90	0.375

MATERIAL IFS: 100007734

MATERIAL THK: 0.1875

MAT DESCRIPTION: STL ASTM A36 SM-HRPO 60X120 RAW .1875

JENSEN METALTECH
450 E. GLENDALE AVE. SPARKS. NV 89431
775-352-2716 FAX: 755-358-8127
JENSENMETALTECH.COM

©2023 Jensen Precast- All rights reserved. All materials appearing as Jensen Precast documents and the like are proprietary work product and are protected under U.S. copyright and other laws. Unless in conjunction with business conducted with Jensen Precast, any use of Jensen Precast work product without express, written consent is prohibited, and recipient is prohibited from distributing any and all work product to non-approved third parties under penalty of civil action.

NAME & DESCRIPTION: 200012853 Frame Component Steel Frame Front, Adjustable

REV: A

WEIGHT: 18.523 lbmass

DRAWN BY: K. Aguilar

CREATED: 9/5/2018

MODIFIED: 1/25/2023

SHEET: 6 OF 12

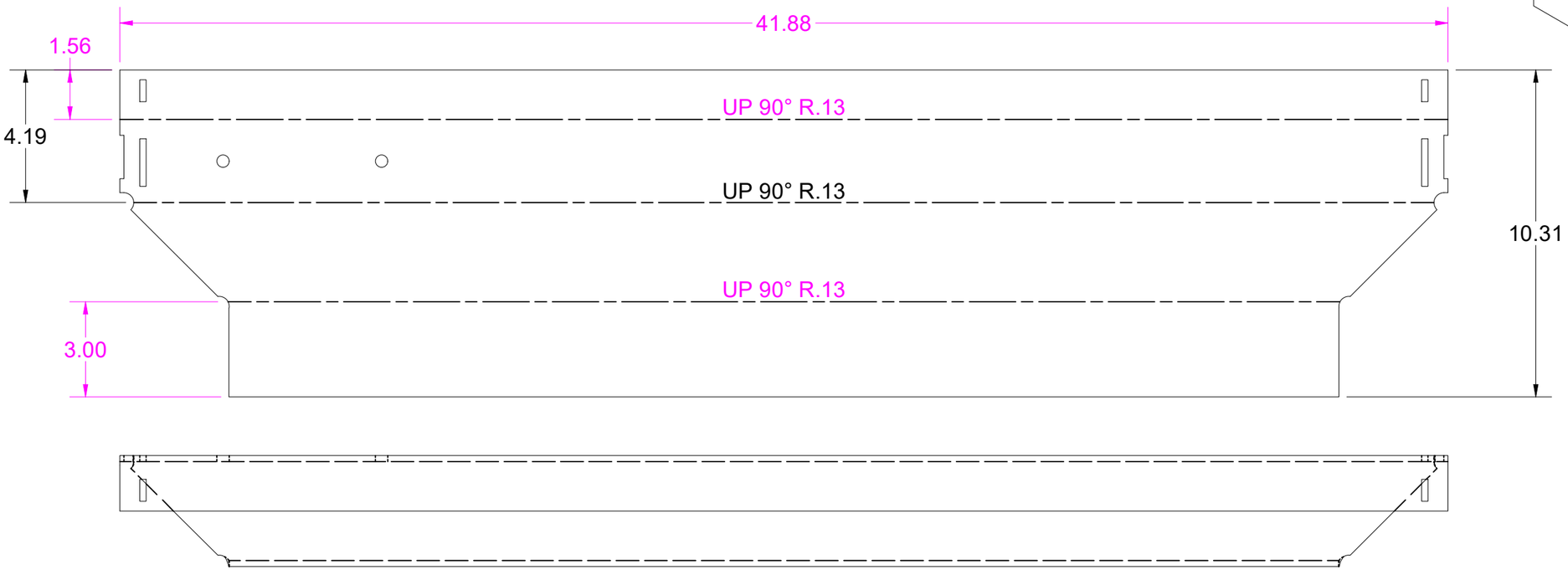

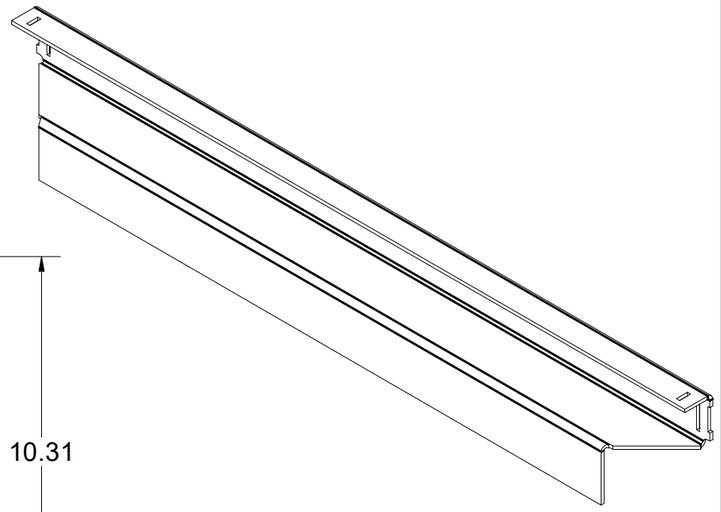

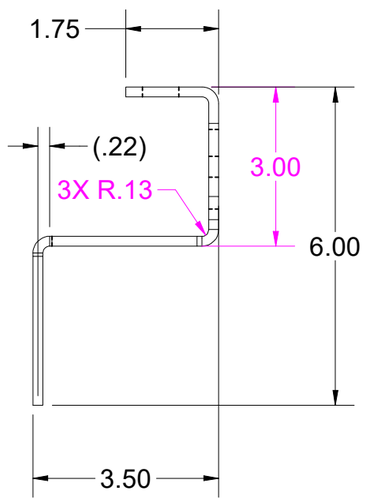

BEND TABLE			
BEND RADIUS	V-OPENING	BEND ANGLE	BEND DEDUCTION
0.125	2	90	0.375

MATERIAL IFS: 100007734

MATERIAL THK: 0.1875

MAT DESCRIPTION: STL ASTM A36 SM-HRPO 60X120 RAW .1875

JENSEN METALTECH
450 E. GLENDALE AVE. SPARKS. NV 89431
775-352-2716 FAX: 755-358-8127
JENSENMETALTECH.COM

©2023 Jensen Precast- All rights reserved. All materials appearing as Jensen Precast documents and the like are proprietary work product and are protected under U.S. copyright and other laws. Unless in conjunction with business conducted with Jensen Precast, any use of Jensen Precast work product without express, written consent is prohibited, and recipient is prohibited from distributing any and all work product to non-approved third parties under penalty of civil action.

NAME & DESCRIPTION: 200012854 — Frame Component Steel Frame End, Adjustable

REV: A

WEIGHT: 21.796 lbmass

DRAWN BY: K. Aguilar

CREATED: 10/24/2018

MODIFIED: 1/25/2023

SHEET: 7 OF 12

200032221.idw

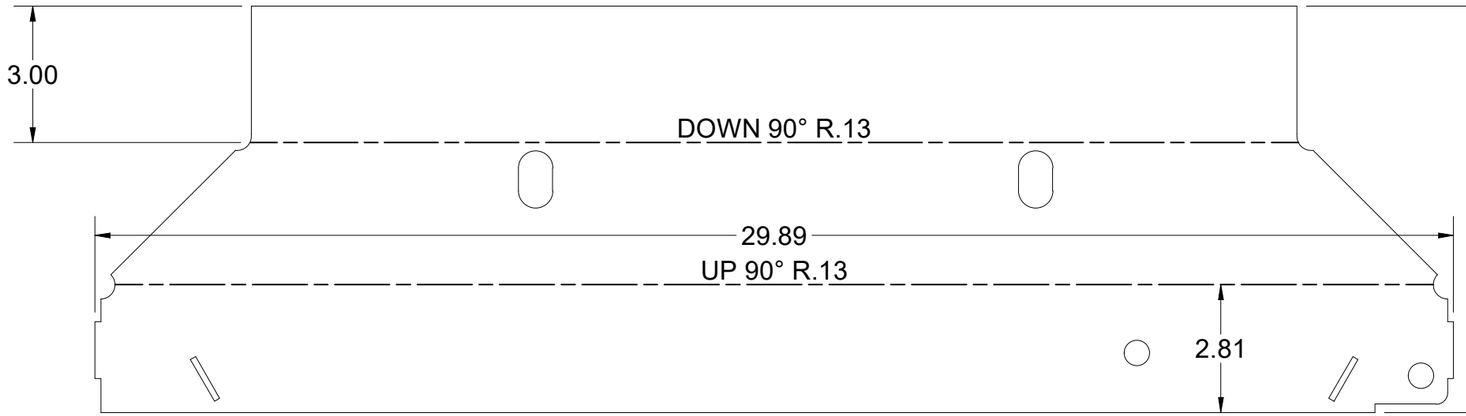

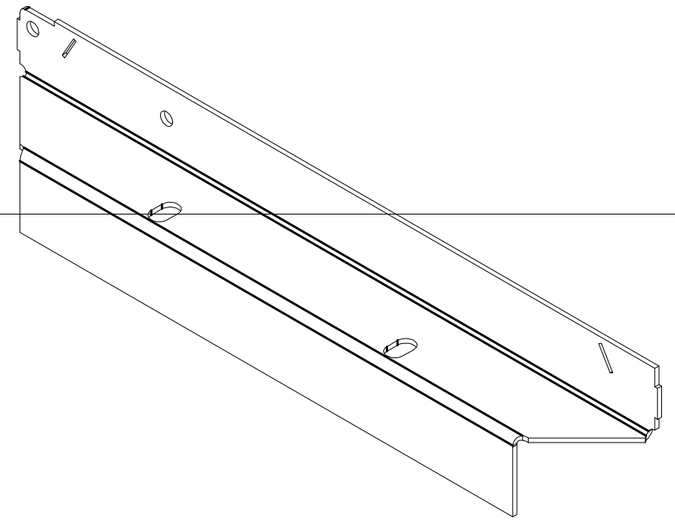

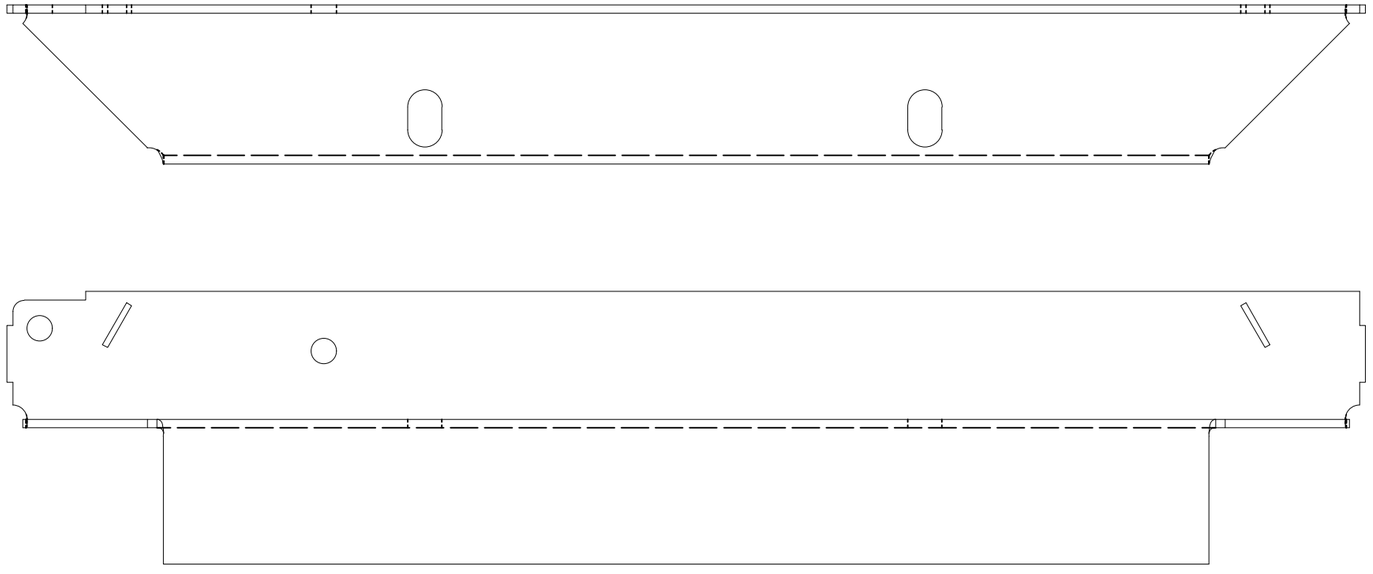

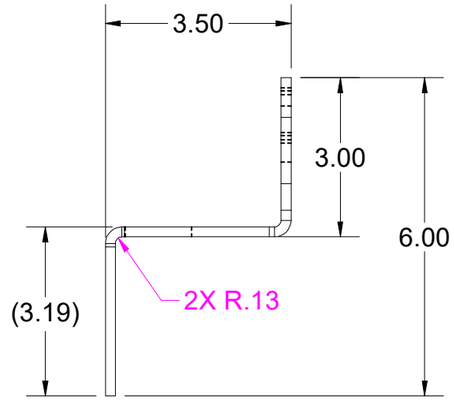

BEND TABLE			
BEND RADIUS	V-OPENING	BEND ANGLE	BEND DEDUCTION
0.125	2	90	0.375

MATERIAL IFS: 100007734

MATERIAL THK: 0.1875

MAT DESCRIPTION: STL ASTM A36 SM-HRPO 60X120 RAW .1875

JENSEN METALTECH
450 E. GLENDALE AVE. SPARKS. NV 89431
775-352-2716 FAX: 755-358-8127
JENSENMETALTECH.COM

©2023 Jensen Precast- All rights reserved. All materials appearing as Jensen Precast documents and the like are proprietary work product and are protected under U.S. copyright and other laws. Unless in conjunction with business conducted with Jensen Precast, any use of Jensen Precast work product without express, written consent is prohibited, and recipient is prohibited from distributing any and all work product to non-approved third parties under penalty of civil action.

NAME & DESCRIPTION: 200012855 — Frame Component Steel Frame Side Right, Adjustable

REV: A

WEIGHT: 12.620 lbmass

DRAWN BY: K. Aguilar

CREATED: 9/5/2018

MODIFIED: 1/25/2023

SHEET: 8 OF 12

200032221.idw

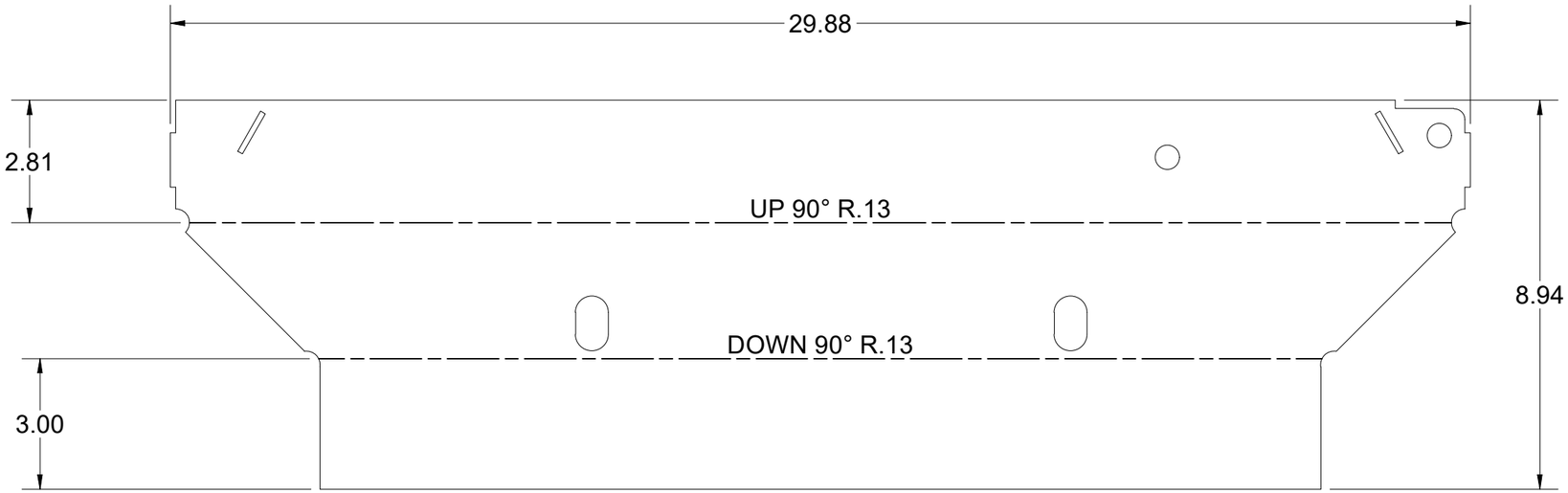

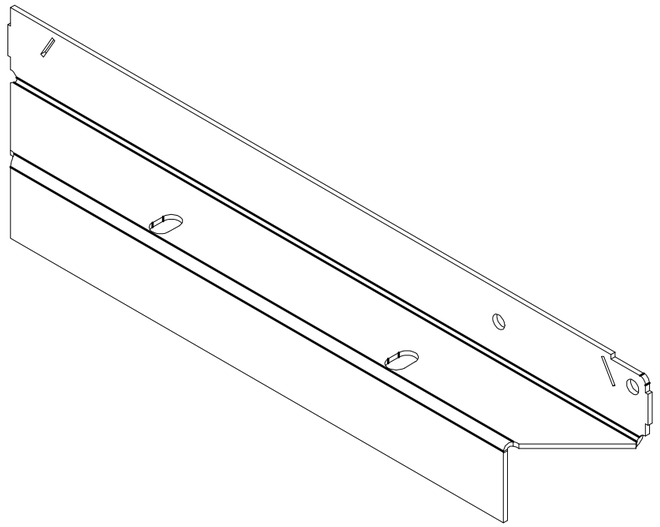

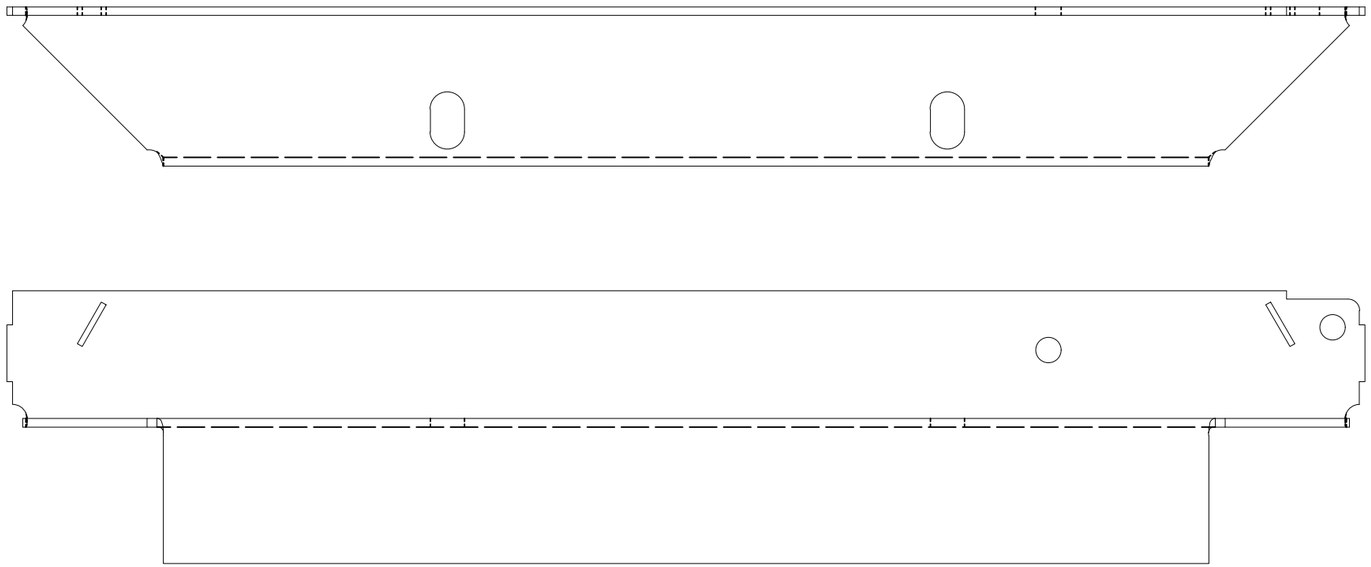

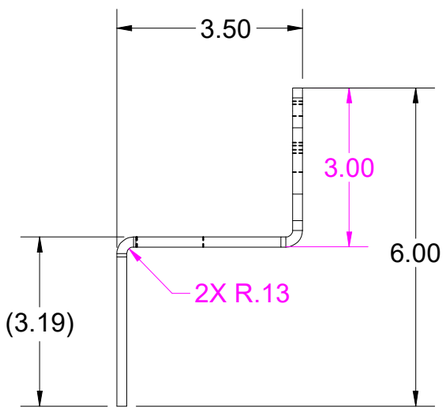

BEND TABLE				MATERIAL IFS: 100007734
BEND RADIUS	V-OPENING	BEND ANGLE	BEND DEDUCTION	MATERIAL THK: 0.1875
0.125	2	90	0.375	MAT DESCRIPTION: STL ASTM A36 SM-HRPO 60X120 RAW .1875

JENSEN METALTECH
450 E. GLENDALE AVE. SPARKS. NV 89431
775-352-2716 FAX: 755-358-8127
JENSENMETALTECH.COM

©2023 Jensen Precast- All rights reserved. All materials appearing as Jensen Precast documents and the like are proprietary work product and are protected under U.S. copyright and other laws. Unless in conjunction with business conducted with Jensen Precast, any use of Jensen Precast work product without express, written consent is prohibited, and recipient is prohibited from distributing any and all work product to non-approved third parties under penalty of civil action.

NAME & DESCRIPTION:	200012856 Frame Component Steel Frame Side Left, Adjustable	REV: A
WEIGHT: 12.620 lbmass	DRAWN BY: K. Aguilar	SHEET: 9 OF 12
CREATED: 9/5/2018	MODIFIED: 1/25/2023	

200032221.idw

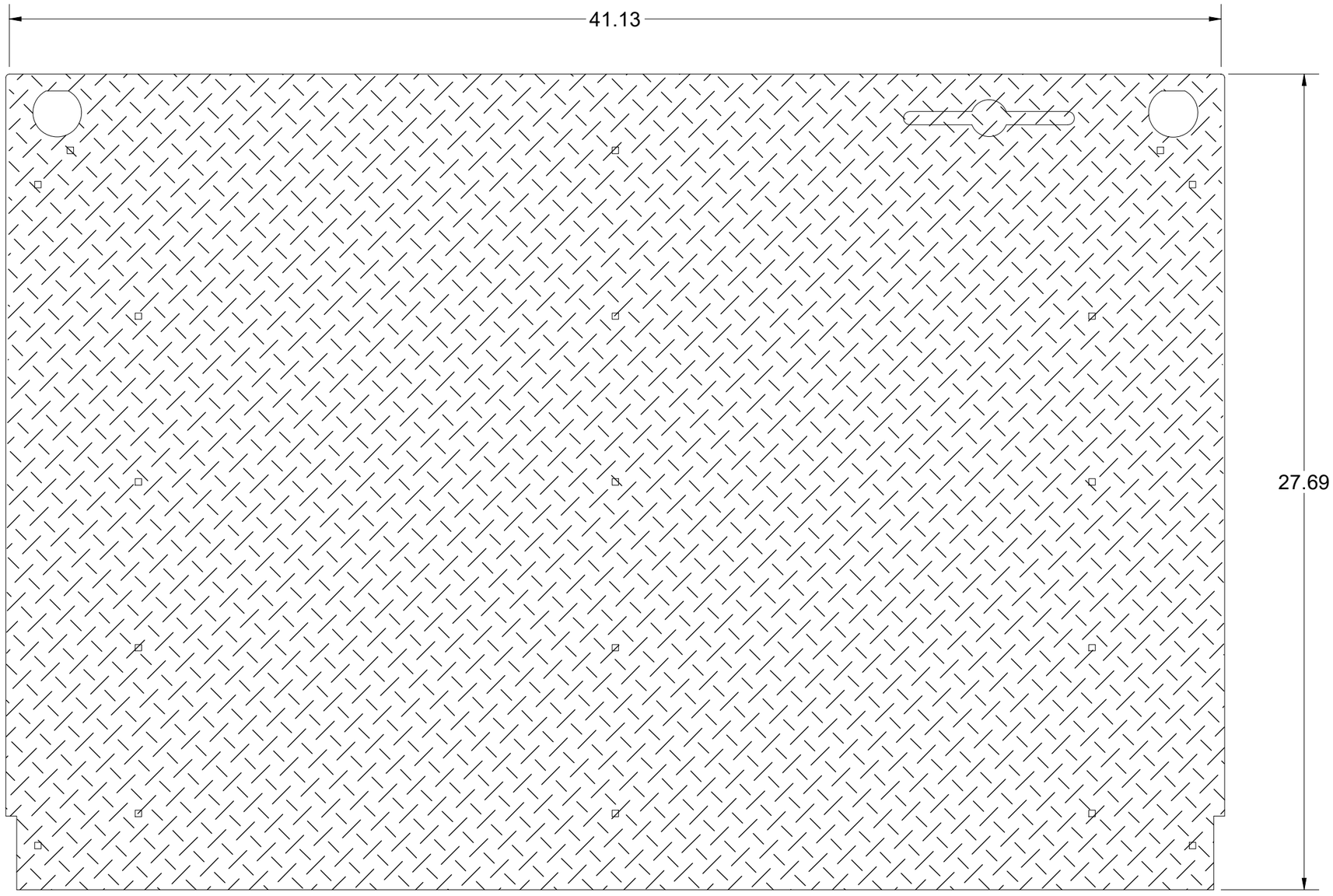

200032221.idw

BEND TABLE				MATERIAL IFS: 100007736			
BEND RADIUS	V-OPENING	BEND ANGLE	BEND DEDUCTION	MATERIAL THK: 0.25			
-	-	-	-	MAT DESCRIPTION: SHT STL CQ DP RAW .25 - 36 KSI YIELD			

JENSEN METALTECH
450 E. GLENDALE AVE. SPARKS. NV 89431
775-352-2716 FAX: 755-358-8127
JENSENMETALTECH.COM

©2023 Jensen Precast- All rights reserved.
All materials appearing as Jensen Precast documents and the like are proprietary work product and are protected under U.S. copyright and other laws.
Unless in conjunction with business conducted with Jensen Precast, any use of Jensen Precast work product without express, written consent is prohibited, and recipient is prohibited from distributing any and all work product to non-approved third parties under penalty of civil action.

NAME & DESCRIPTION: 200032223 Door Component Steel Plate, Top		REV: A
WEIGHT: 88.781 lbmass	DRAWN BY: K. Aguilar	SHEET: 10 OF 12
CREATED: 10/25/2018	MODIFIED: 1/25/2023	

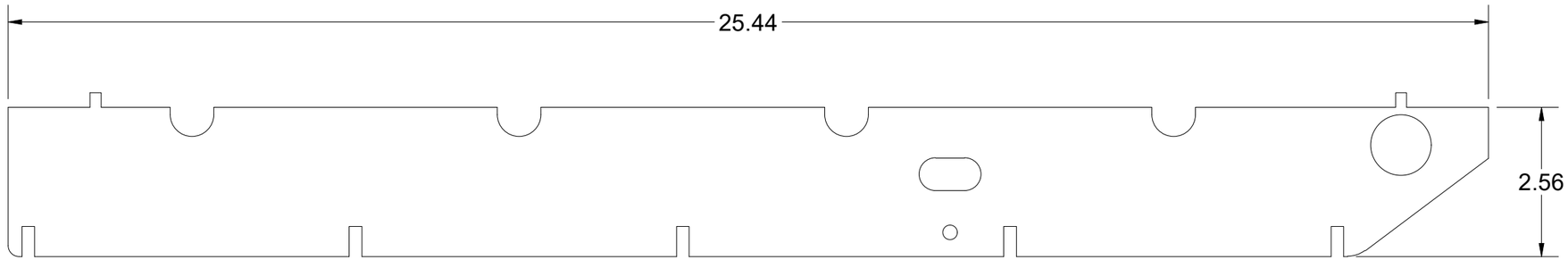

BEND TABLE				MATERIAL IFS: 100007734
BEND RADIUS	V-OPENING	BEND ANGLE	BEND DEDUCTION	MATERIAL THK: 0.1875
-	-	-	-	MAT DESCRIPTION: STL ASTM A36 SM-HRPO 60X120 RAW .1875

JENSEN METALTECH
450 E. GLENDALE AVE. SPARKS. NV 89431
775-352-2716 FAX: 755-358-8127
JENSENMETALTECH.COM

©2023 Jensen Precast- All rights reserved.
All materials appearing as Jensen Precast documents and the like are proprietary work product and are protected under U.S. copyright and other laws.
Unless in conjunction with business conducted with Jensen Precast, any use of Jensen Precast work product without express, written consent is prohibited, and recipient is prohibited from distributing any and all work product to non-approved third parties under penalty of civil action.

NAME & DESCRIPTION:	200032226 Door Component Steel Side Bar	REV: A
WEIGHT: 3.197 lbmass	DRAWN BY: K. Aguilar	SHEET: 11 OF 12
CREATED: 10/25/2018	MODIFIED: 1/25/2023	

200032221.idw

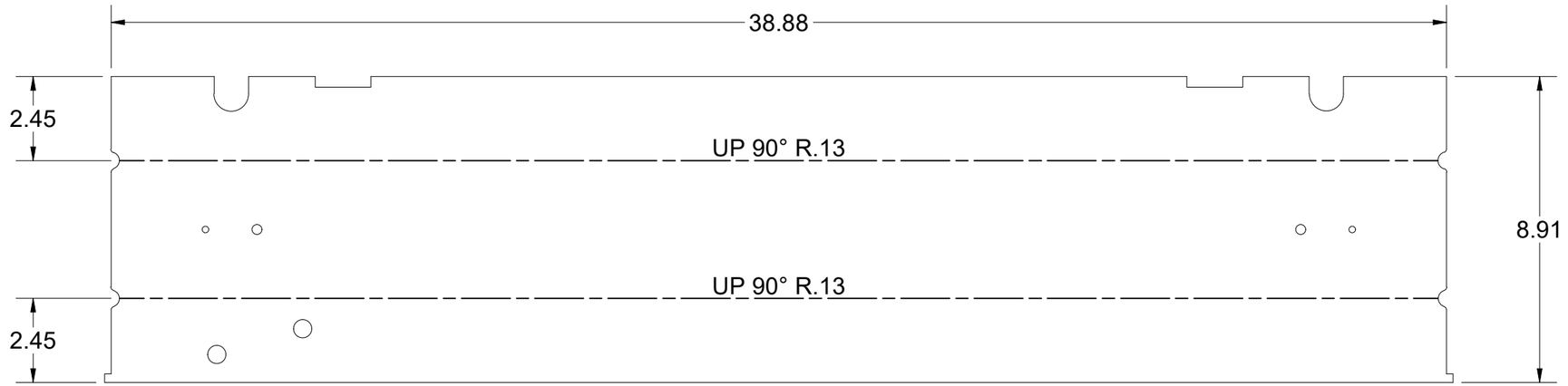

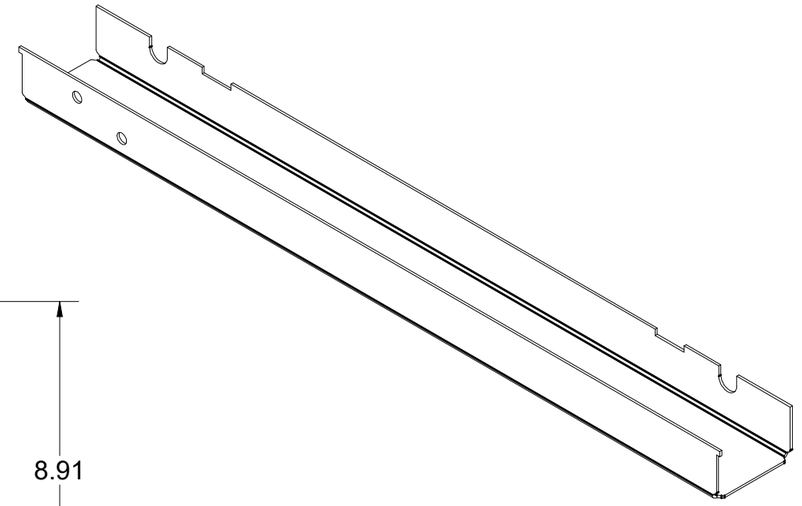

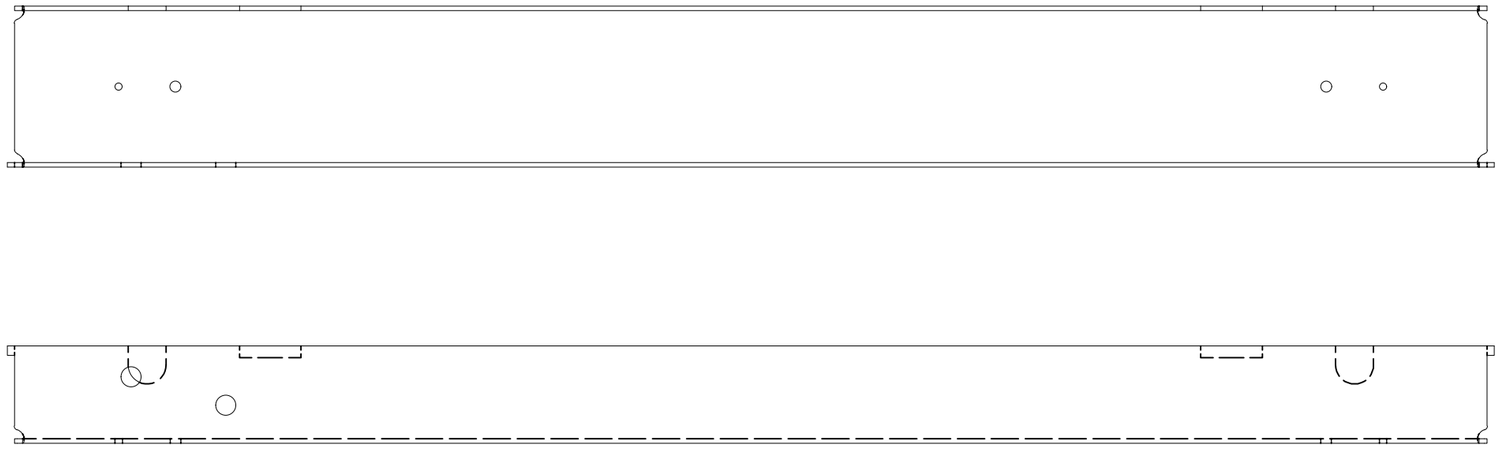

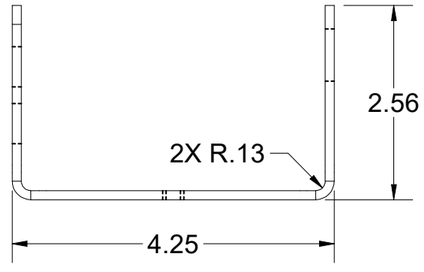

BEND TABLE			
BEND RADIUS	V-OPENING	BEND ANGLE	BEND DEDUCTION
0.125	1	90	0.2350

MATERIAL IFS: 100007840

MATERIAL THK: 0.1196

MAT DESCRIPTION: SHT STL GR80 GA-11 SM-HR RAW .1196

JENSEN METALTECH
450 E. GLENDALE AVE. SPARKS. NV 89431
775-352-2716 FAX: 755-358-8127
JENSENMETALTECH.COM

©2023 Jensen Precast- All rights reserved.
All materials appearing as Jensen Precast documents and the like are proprietary work product and are protected under U.S. copyright and other laws.
Unless in conjunction with business conducted with Jensen Precast, any use of Jensen Precast work product without express, written consent is prohibited, and recipient is prohibited from distributing any and all work product to non-approved third parties under penalty of civil action.

NAME & DESCRIPTION: 200032227 Door Component Steel Channel

REV: A

WEIGHT: 11.710 lbmass

DRAWN BY: K. Aguilar

CREATED: 10/25/2018

MODIFIED: 1/25/2023

SHEET: 12 OF 12

200032221.idw