NOTES

- FOR COMPLETE DESIGN AND PRODUCT INFORMATION CONTACT JENSEN PRECAST.

BILL OF MATERIALS

ITEM	UNIT QTY	QTY	PART NUMBER	DESCRIPTION
1	43.422 ft^3	43.422 ft^3	100011427	CONCRETE MIX GENERIC 6000 PSI
2	1	1	200057358	REINFORCING MAT 200057358
3	1	1	200057359	REINFORCING MAT 200057359

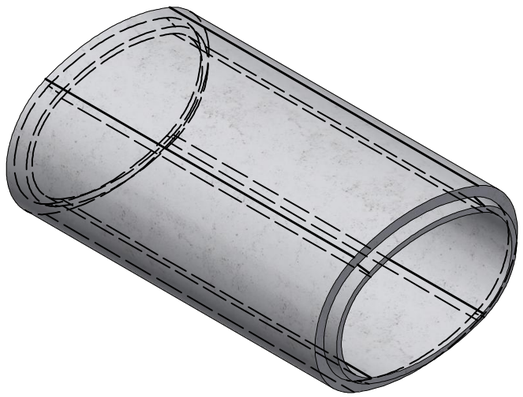

ISO REF

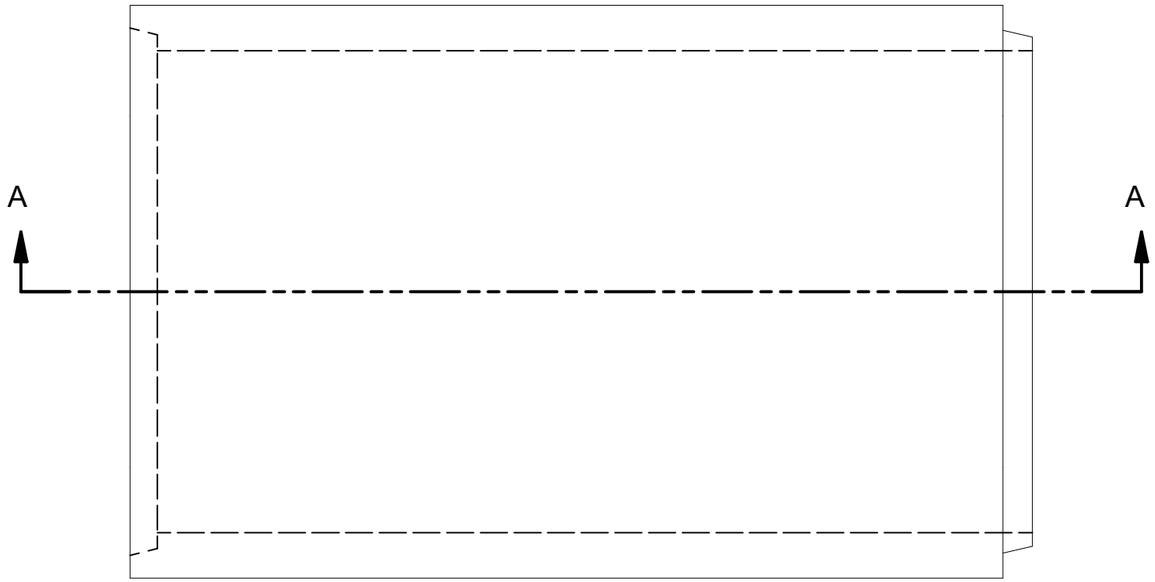

PLAN VIEW

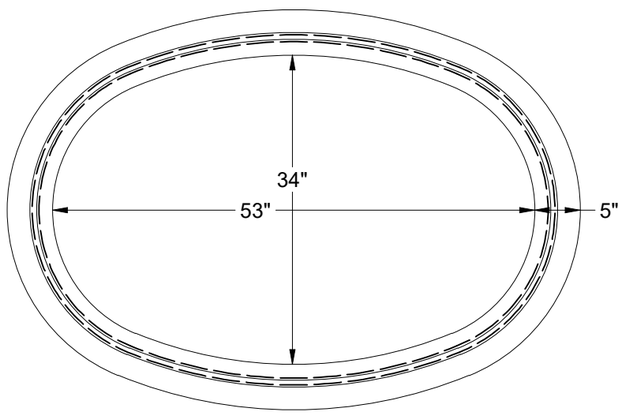

ELEVATION

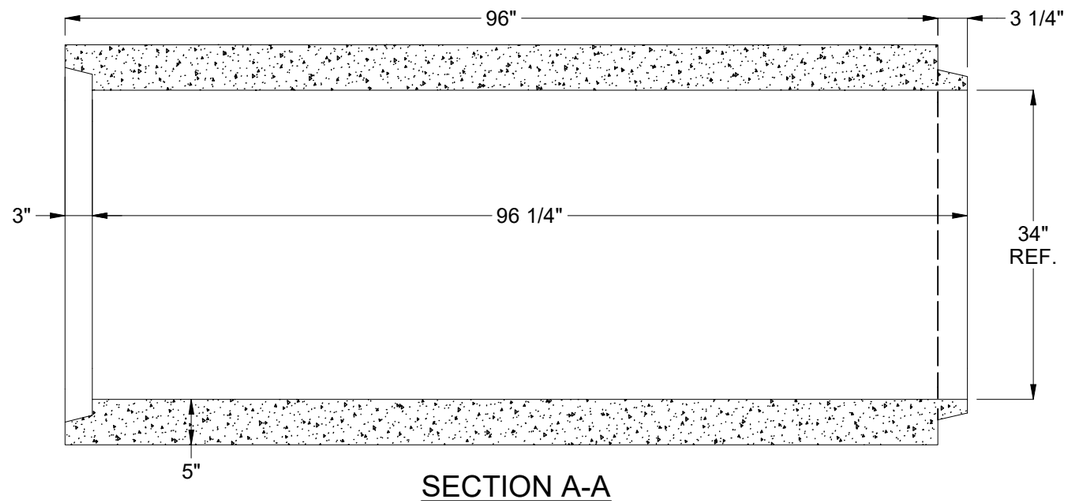

SECTION A-A

100002262.idw

REVISION HISTORY

REV	DESCRIPTION	DATE	BY
1	2110-51738	10-13-21	DCH

BURY DEPTH:	to		
WATER LEVEL:		APPROX. WEIGHT:	6525.59 Lbs
DESIGN SPEC:	ASTM C507	LOADING SPEC:	Class 4
REINFORCEMENT TYPE:	WWR Plain	LIFTING TYPE:	None

JENSEN PRECAST EST. 1968

WWW.JENSENPRECAST.COM

©2021 Jensen Precast- All rights reserved.
All materials appearing as Jensen Precast documents and the like are proprietary work product and are protected under U.S. copyright and other laws.
Unless in conjunction with business conducted with Jensen Precast, any use of Jensen Precast work product without express, written consent is prohibited, and recipient is prohibited from distributing any and all work product to non-approved third parties under penalty of civil action.

DESCRIPTION:	RCP PE3453 Horizontal Class 4 Bell - Spigot 96L CASTING LAYOUT		REV: A-3
PART NUMBER:	100002262	DRAWN BY:	MLR
CREATED:	10/18/2021	MODIFIED:	10/22/2021
			SHEET: 1 OF 1