NOTES
■ FOR COMPLETE DESIGN AND PRODUCT INFORMATION CONTACT JENSEN PRECAST.

BILL OF MATERIALS

ITEM	UNIT QTY	QTY	PART NUMBER	DESCRIPTION
1	33.427 ft^3	33.427 ft^3	100002728	CONCRETE MIX GENERIC 4000 PSI
2	1	1	100019147	RCP CAGE PE2945 Class 3 Bell - Spigot 96L



ISO REF

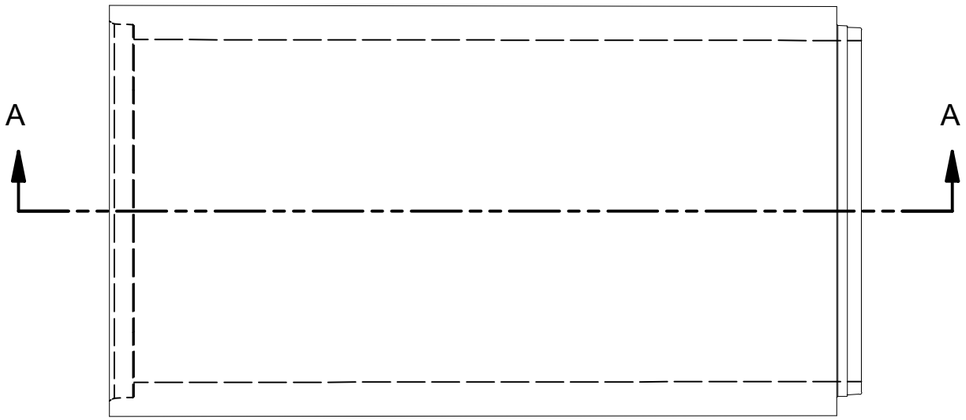

PLAN VIEW

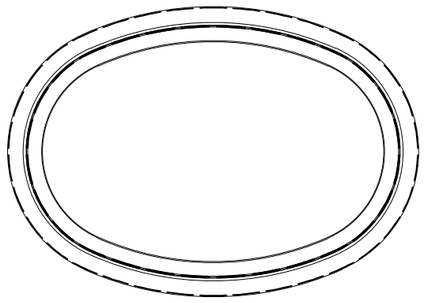

GROOVE END

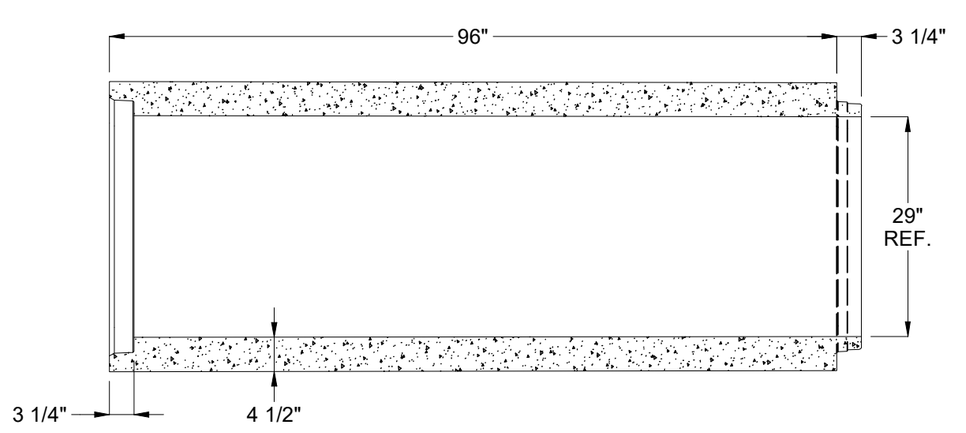

SECTION A-A

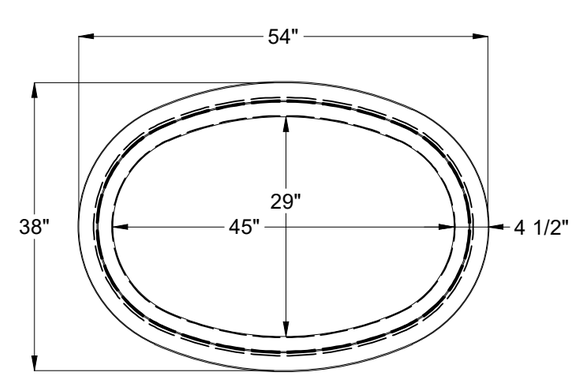

TONGUE END

REVISION HISTORY			
REV	DESCRIPTION	DATE	BY
B	2310-56018	10/31/23	JW

BURY DEPTH:	to		
WATER LEVEL:		WEIGHT:	5023.51 Lbs
DESIGN SPEC:	ASTM C507	LOADING SPEC:	Class 3
REINFORCEMENT TYPE:	WWR Deformed	LIFTING TYPE:	None

JENSEN PRECAST EST. 1968

WWW.JENSENPRECAST.COM

©2023 Jensen Precast- All rights reserved.
All materials appearing as Jensen Precast documents and the like are proprietary work product and are protected under U.S. copyright and other laws.
Unless in conjunction with business conducted with Jensen Precast, any use of Jensen Precast work product without express, written consent is prohibited, and recipient is prohibited from distributing any and all work product to non-approved third parties under penalty of civil action.

DESCRIPTION:	RCP PE2945 Horizontal Class 3 Bell - Spigot 96L CASTING LAYOUT		REV: A-1
PART NUMBER:	100002260	DRAWN BY:	MLR
CREATED:	10/31/2023	MODIFIED:	11/13/2023
			SHEET: 1 OF 1

100002260.idw