| NOTES |
|---|
| ■ FOR COMPLETE DESIGN AND PRODUCT INFORMATION CONTACT JENSEN PRECAST. |

## BILL OF MATERIALS

| ITEM | UNIT QTY | QTY | PART NUMBER | DESCRIPTION |
|---|---|---|---|---|
| 1 | 23.089 ft^3 | 23.089 ft^3 | 100002728 | CONCRETE MIX GENERIC 4000 PSI |
| 2 | 1 | 1 | 100019138 | RCP CAGE PE2438 Class 3 Bell - Spigot 96L |

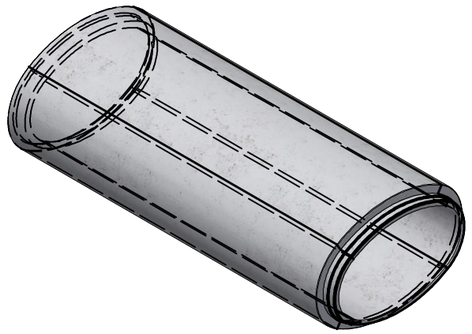

ISO REF

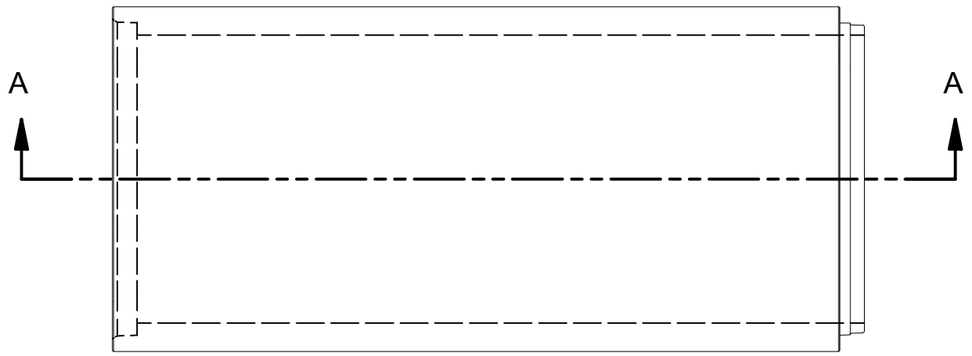


PLAN VIEW

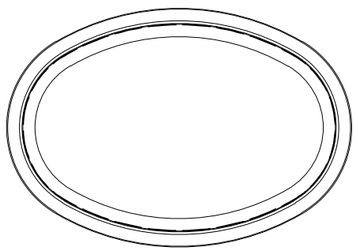

GROOVE END

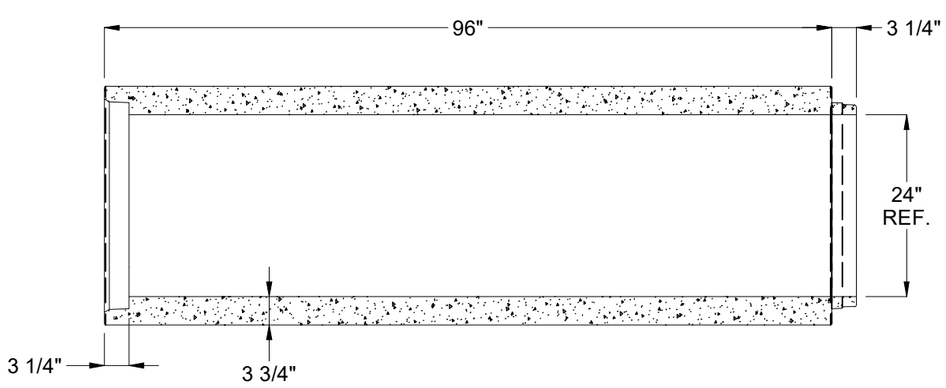


SECTION A-A

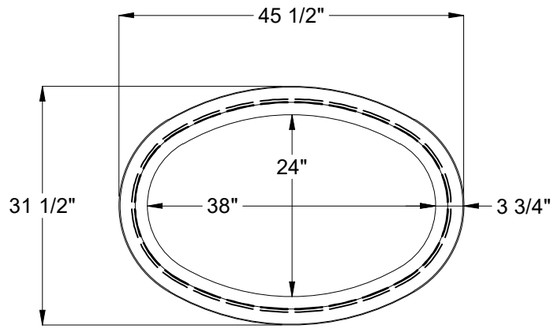


TONGUE END

| REVISION HISTORY | | | |
|---|---|---|---|
| REV | DESCRIPTION | DATE | BY |
| B | 2404-56829 | 4/18/2024 | MGL |

| | | | |
|---|---|---|---|
| BURY DEPTH: | to | | |
| WATER LEVEL: | | WEIGHT: | 3469.83 Lbs |
| DESIGN SPEC: | ASTM C507 | LOADING SPEC: | Class 3 |
| REINFORCEMENT TYPE: | WWR Deformed | LIFTING TYPE: | None |

JENSEN PRECAST EST. 1968

WWW.JENSENPRECAST.COM

©2024 Jensen Precast- All rights reserved.
All materials appearing as Jensen Precast documents and the like are proprietary work product and are protected under U.S. copyright and other laws.
Unless in conjunction with business conducted with Jensen Precast, any use of Jensen Precast work product without express, written consent is prohibited, and recipient is prohibited from distributing any and all work product to non-approved third parties under penalty of civil action.

| | | | |
|---|---|---|---|
| DESCRIPTION: | RCP PE2438 Horizontal Class 3 Bell - Spigot 96L<br>CASTING LAYOUT | | REV: A-3 |
| PART NUMBER: | 100002258 | DRAWN BY: | M. Lincoln |
| CREATED: | 4/18/2024 | MODIFIED: | 4/19/2024 |
| | | | SHEET: 1 OF 1 |

100002258.idw