NOTES
■ CHAMFER INSIDE AND OUTSIDE EDGES AT 45 DEGREES
■ FOR COMPLETE DESIGN AND PRODUCT INFORMATION CONTACT JENSEN PRECAST.

BILL OF MATERIALS

ITEM	UNIT QTY	QTY	PART NUMBER	DESCRIPTION
1	37.461 ft^3	37.461 ft^3	100011427	CONCRETE MIX GENERIC 6000 PSI
2	1	4	100002791	INSERT THREADED PLASTIC 0.5 X 2.5 IN12R
3	1	1	100019199	REINFORCING MAT 100019199
4	1	4	100002872	ANCHOR DOGBONE P52 4T X 3-3/4" GALV

100002226.idw

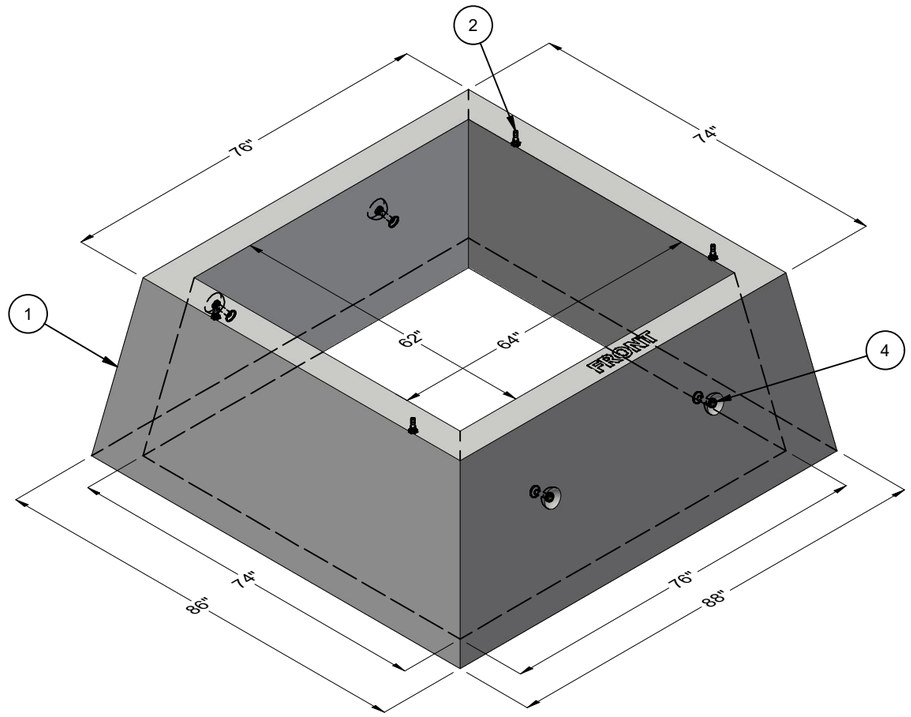

ISO REF

LIFTING NOTES
■ THIS CONCRETE PRODUCT IS DESIGNED TO BE LIFTED AT 2500 PSI WITH 4 LIFT CONNECTIONS EQUALLY LOADED TO 2 LIFTING POINTS AT A MINIMUM 60° SLING ANGLE, MEASURED FROM HORIZONTAL.

BURY DEPTH:	0.0' - 3.0' to Top		
WATER LEVEL:	Below Structure	APPROX. WEIGHT:	5633.46 Lbs
DESIGN SPEC:	ACI 318,ASTM C857	LOADING SPEC:	A-16 (AASHTO HS20-44)
REINFORCEMENT TYPE:	Rebar	LIFTING TYPE:	Dogbone

JENSEN PRECAST EST. 1968

WWW.JENSENPRECAST.COM

©2023 Jensen Precast- All rights reserved.
All materials appearing as Jensen Precast documents and the like are proprietary work product and are protected under U.S. copyright and other laws.
Unless in conjunction with business conducted with Jensen Precast, any use of Jensen Precast work product without express, written consent is prohibited, and recipient is prohibited from distributing any and all work product to non-approved third parties under penalty of civil action.

CHANGE HISTORY			
NO.	DESCRIPTION	DATE	BY
1	2307-55559	7-13-23	JW

DESCRIPTION:	Riser 7476x36 Tucson Elec Pwr SR-240 CASTING LAYOUT		REV: A-1
PART NUMBER:	100002226	DRAWN BY:	MLR
CREATED:	7/13/2023	MODIFIED:	8/16/2023
			SHEET: 1 OF 2

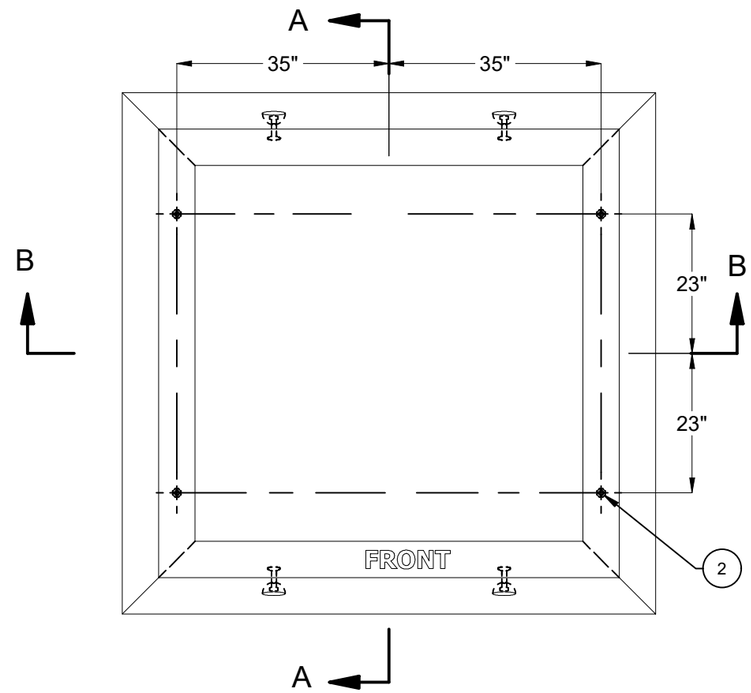

PLAN VIEW

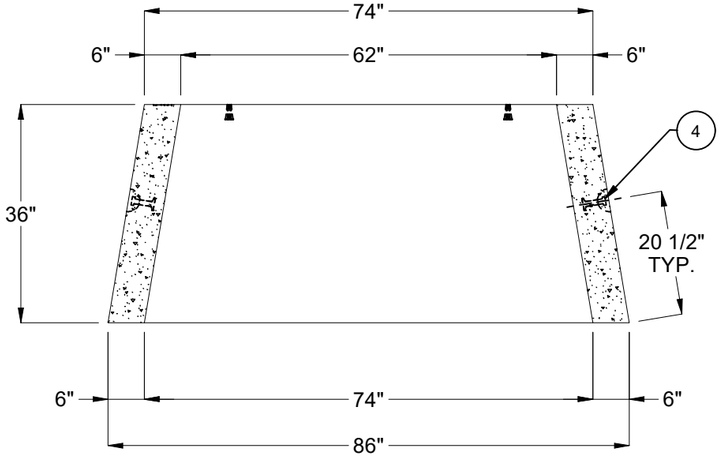

SECTION A-A

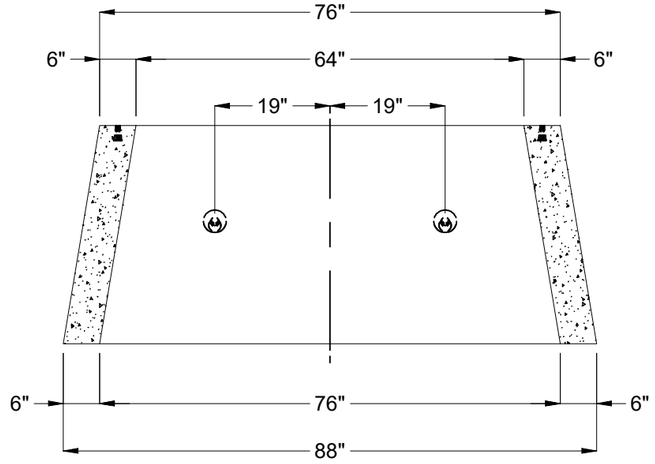

SECTION B-B

BURY DEPTH:	0.0' - 3.0' to Top		
WATER LEVEL:	Below Structure	APPROX. WEIGHT:	5633.46 Lbs
DESIGN SPEC:	ACI 318,ASTM C857	LOADING SPEC:	A-16 (AASHTO HS20-44)
REINFORCEMENT TYPE:	Rebar	LIFTING TYPE:	Dogbone

JENSEN PRECAST EST. 1968

WWW.JENSENPRECAST.COM

©2023 Jensen Precast- All rights reserved.
All materials appearing as Jensen Precast documents and the like are proprietary work product and are protected under U.S. copyright and other laws.
Unless in conjunction with business conducted with Jensen Precast, any use of Jensen Precast work product without express, written consent is prohibited, and recipient is prohibited from distributing any and all work product to non-approved third parties under penalty of civil action.

DESCRIPTION:	Riser 7476x36 Tucson Elec Pwr SR-240 CASTING DRAWING		REV: A-1
PART NUMBER:	100002226	DRAWN BY:	MLR
CREATED:	7/13/2023	MODIFIED:	8/16/2023
			SHEET: 2 OF 2

100002226.idw