NOTES
■ FOR COMPLETE DESIGN AND PRODUCT INFORMATION CONTACT JENSEN PRECAST.

BILL OF MATERIALS

ITEM	UNIT QTY	QTY	PART NUMBER	DESCRIPTION
1	20.048 ft^3	20.048 ft^3	100011427	CONCRETE MIX GENERIC 6000 PSI
2	1	1	200045104	RCP CAGE P30B Class 5 Bell-Spigot 90L-INNER
3	1	1	200045105	RCP CAGE P30B Class 5 Bell-Spigot 90L-OUTER

ALTERNATE REINFORCING OPTION	
PART NUMBER	DESCRIPTION
200065722	WWR REINFORCING CAGE 200065722

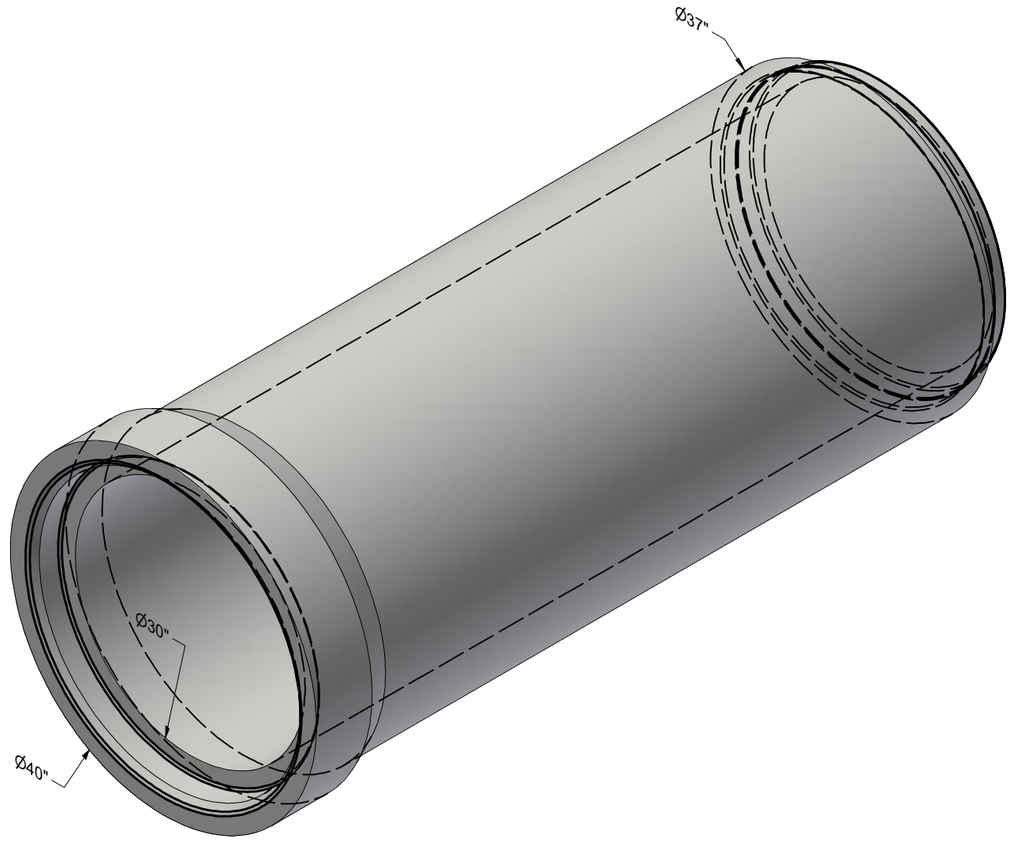

ISO REF

CHANGE HISTORY			
REV	DESCRIPTION	DATE	BY
1	2206-52886	6-15-22	DCH
2	BELL CORRECTION	8-9-22	DCH

BURY DEPTH:	to		
WATER LEVEL:		WEIGHT:	3012.88 Lbs
DESIGN SPEC:	ASTM C76/AASHTO M170	LOADING SPEC:	Class 5
REINFORCEMENT TYPE:	WWR Deformed	LIFTING TYPE:	None

JENSEN PRECAST EST. 1968

WWW.JENSENPRECAST.COM

©2022 Jensen Precast- All rights reserved.
All materials appearing as Jensen Precast documents and the like are proprietary work product and are protected under U.S. copyright and other laws.
Unless in conjunction with business conducted with Jensen Precast, any use of Jensen Precast work product without express, written consent is prohibited, and recipient is prohibited from distributing any and all work product to non-approved third parties under penalty of civil action.

DESCRIPTION:	RCP P30B Class 5 Bell - Spigot 90L CASTING LAYOUT		REV: C-3
PART NUMBER:	100002121	DRAWN BY:	D. Hughes
CREATED:	2/12/2020	MODIFIED:	8/9/2022
			SHEET: 1 OF 2

100002121.idw

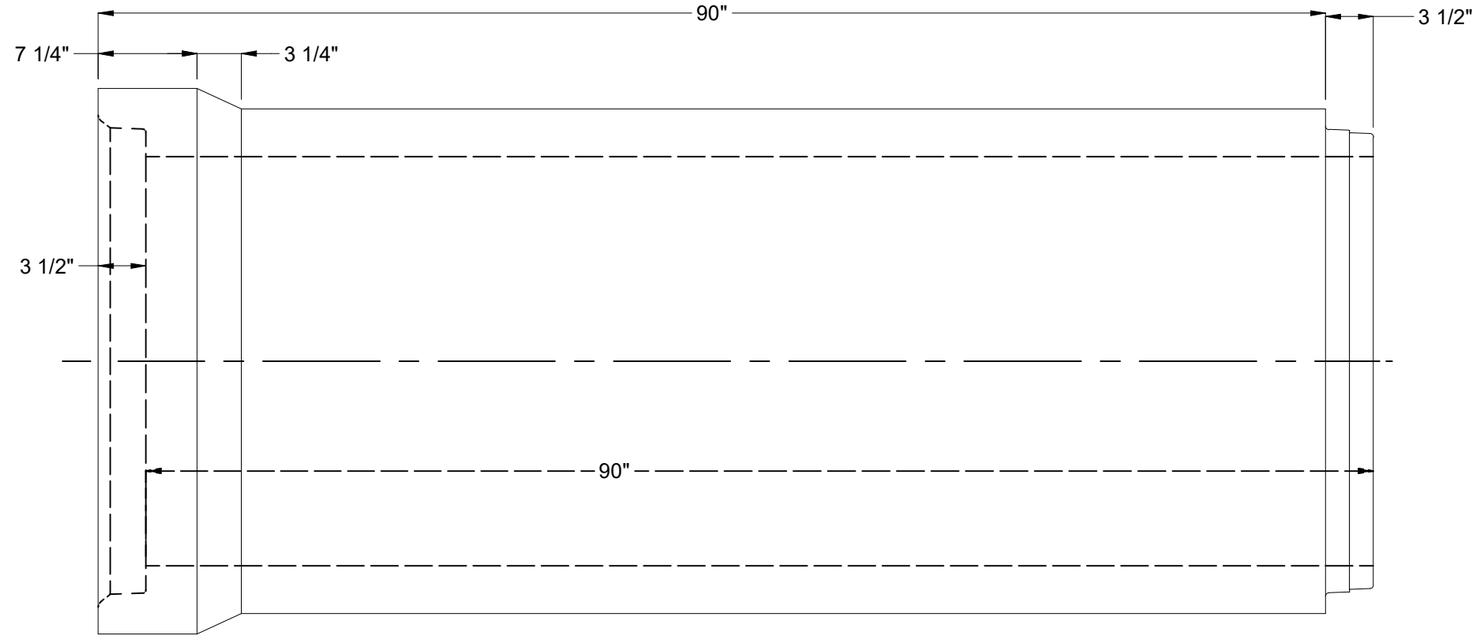

PLAN VIEW

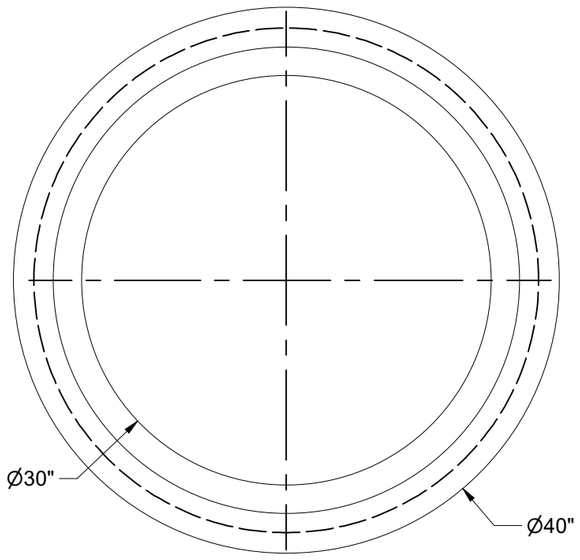

GROOVE END

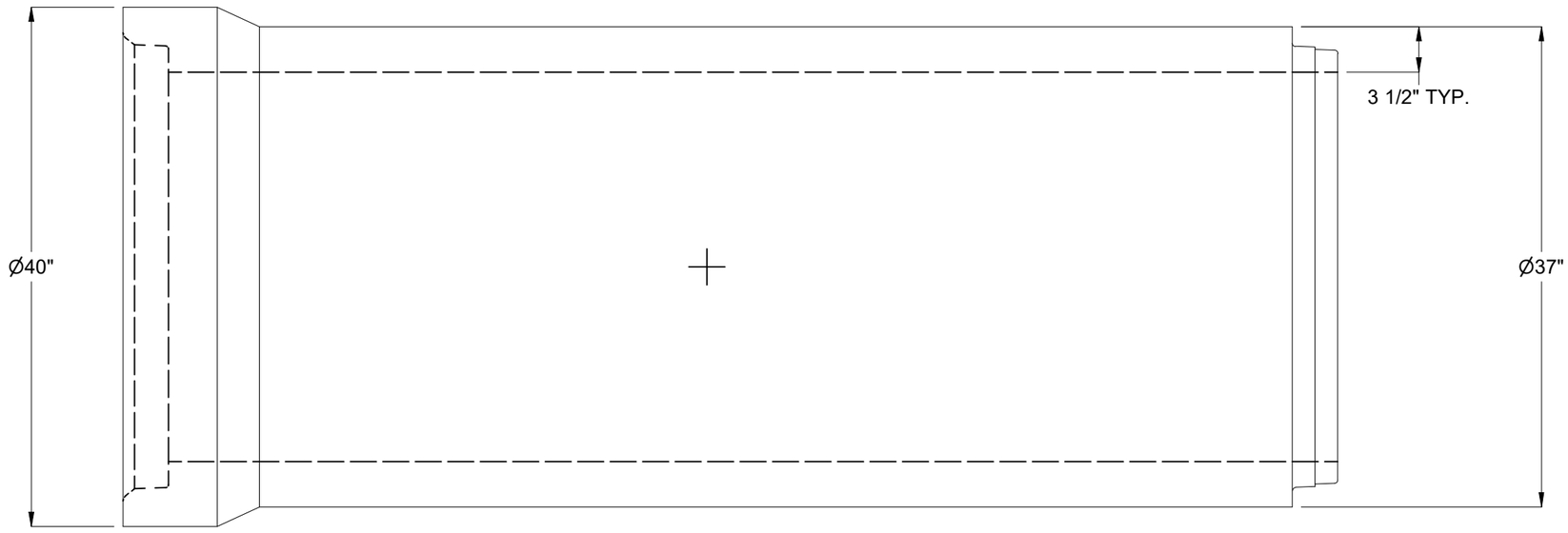

ELEVATION

BURY DEPTH:	to		
WATER LEVEL:		WEIGHT:	3012.88 Lbs
DESIGN SPEC:	ASTM C76/AASHTO M170	LOADING SPEC:	Class 5
REINFORCEMENT TYPE:	WWR Deformed	LIFTING TYPE:	None

JENSEN PRECAST EST. 1968

WWW.JENSENPRECAST.COM

©2022 Jensen Precast- All rights reserved.
All materials appearing as Jensen Precast documents and the like are proprietary work product and are protected under U.S. copyright and other laws.
Unless in conjunction with business conducted with Jensen Precast, any use of Jensen Precast work product without express, written consent is prohibited, and recipient is prohibited from distributing any and all work product to non-approved third parties under penalty of civil action.

DESCRIPTION:	RCP P30B Class 5 Bell - Spigot 90L CASTING DRAWING		REV: C-3
PART NUMBER:	100002121	DRAWN BY:	D. Hughes
CREATED:	2/12/2020	MODIFIED:	8/9/2022
			SHEET: 2 OF 2

100002121.idw