NOTES
■ FOR COMPLETE DESIGN AND PRODUCT INFORMATION CONTACT JENSEN PRECAST.

BILL OF MATERIALS

ITEM	UNIT QTY	QTY	PART NUMBER	DESCRIPTION
1	19.905 ft^3	19.905 ft^3	100002728	CONCRETE MIX GENERIC 4000 PSI
2	1	1	200045102	RCP CAGE P30B Class 3 Bell-Spigot 90L

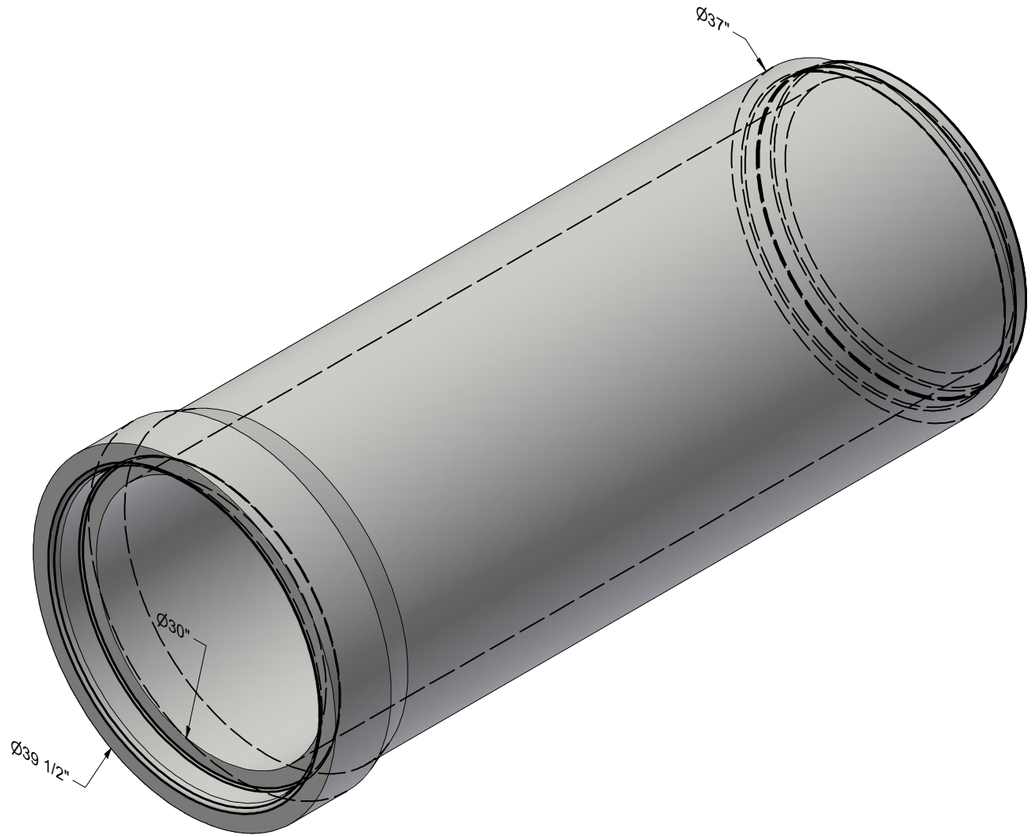

ISO REF

LIFTING NOTES
■ THIS CONCRETE PRODUCT IS DESIGNED TO BE LIFTED AT 4000PSI WITH 1 LIFT CONNECTIONS EQUALLY LOADED TO 1 LIFTING POINTS AT A MINIMUM 90° SLING ANGLE, MEASURED FROM HORIZONTAL.

BURY DEPTH:	to		
WATER LEVEL:		WEIGHT:	2991.38 Lbs
DESIGN SPEC:	ASTM C76/AASHTO M170	LOADING SPEC:	Class 3
REINFORCEMENT TYPE:	WWR Deformed	LIFTING TYPE:	None

JENSEN PRECAST EST. 1968

WWW.JENSENPRECAST.COM

©2023 Jensen Precast- All rights reserved.
All materials appearing as Jensen Precast documents and the like are proprietary work product and are protected under U.S. copyright and other laws.
Unless in conjunction with business conducted with Jensen Precast, any use of Jensen Precast work product without express, written consent is prohibited, and recipient is prohibited from distributing any and all work product to non-approved third parties under penalty of civil action.

CHANGE HISTORY

REV	DESCRIPTION	DATE	BY
1	2201-52206	2-16-22	DCH
2	BELL CORRECTION	7-20-22	DCH

DESCRIPTION:	RCP P30B Class 3 Bell - Spigot 90L CASTING LAYOUT		REV: A-10
PART NUMBER:	100002119	DRAWN BY:	MLR
CREATED:	2/12/2020	MODIFIED:	12/11/2023
			SHEET: 1 OF 2

100002119.idw

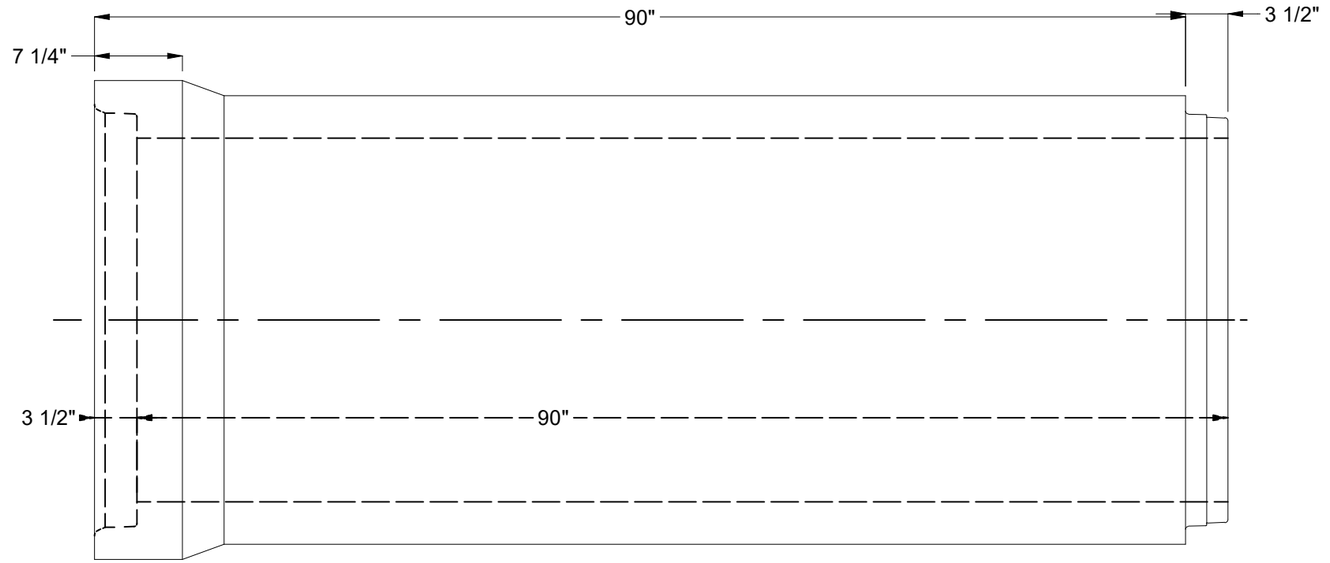

PLAN VIEW

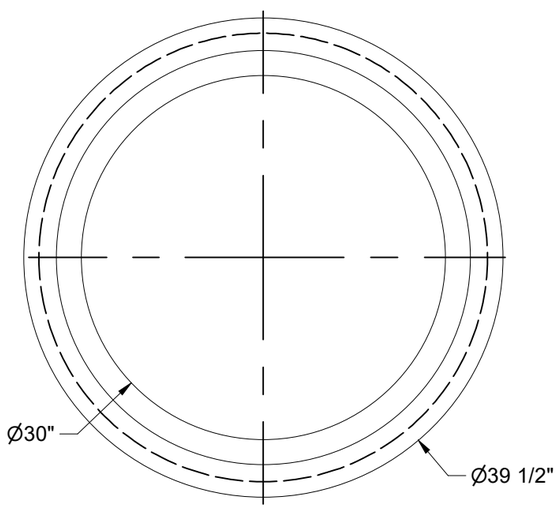

GROOVE END

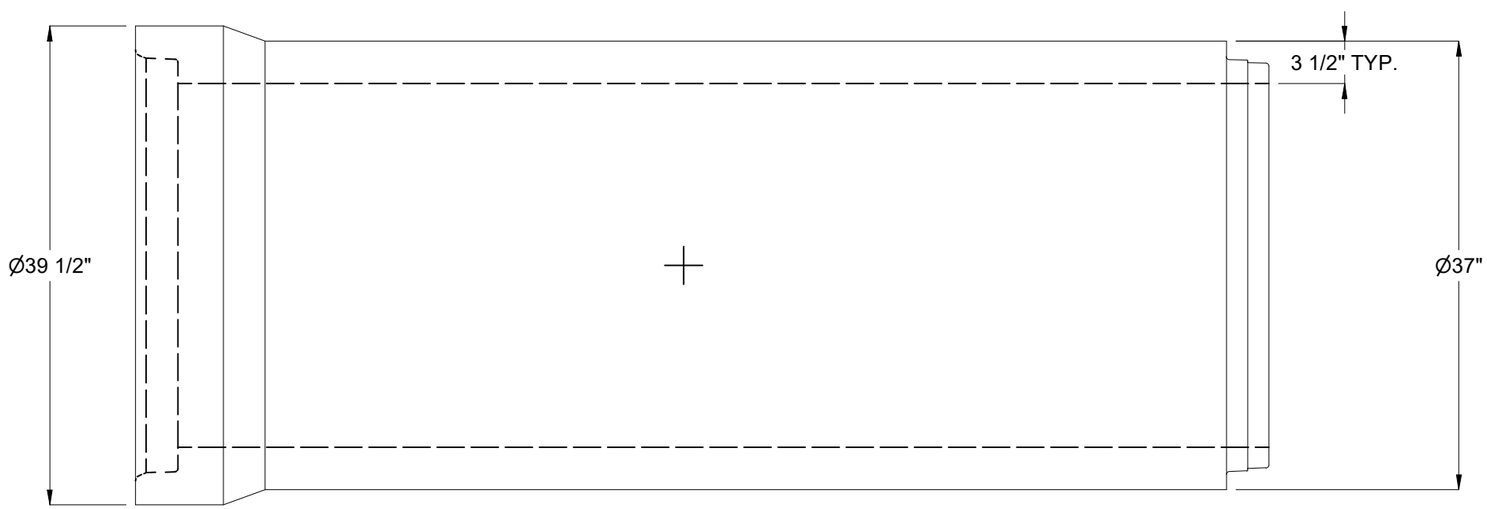

ELEVATION

BURY DEPTH:	to		
WATER LEVEL:		WEIGHT:	2991.38 Lbs
DESIGN SPEC:	ASTM C76/AASHTO M170	LOADING SPEC:	Class 3
REINFORCEMENT TYPE:	WWR Deformed	LIFTING TYPE:	None

JENSEN PRECAST EST. 1968

WWW.JENSENPRECAST.COM

©2023 Jensen Precast- All rights reserved.
All materials appearing as Jensen Precast documents and the like are proprietary work product and are protected under U.S. copyright and other laws.
Unless in conjunction with business conducted with Jensen Precast, any use of Jensen Precast work product without express, written consent is prohibited, and recipient is prohibited from distributing any and all work product to non-approved third parties under penalty of civil action.

DESCRIPTION:	RCP P30B Class 3 Bell - Spigot 90L CASTING DRAWING		REV: A-10
PART NUMBER:	100002119	DRAWN BY:	MLR
CREATED:	2/12/2020	MODIFIED:	12/11/2023
			SHEET: 2 OF 2

100002119.idw