NOTES
■ FOR COMPLETE DESIGN AND PRODUCT INFORMATION CONTACT JENSEN PRECAST.

BILL OF MATERIALS

ITEM	UNIT QTY	QTY	PART NUMBER	DESCRIPTION
1	13.877 ft^3	13.877 ft^3	100011427	CONCRETE MIX GENERIC 6000 PSI
2	1	1	100019143	RCP CAGE P24B Class 4 Bell - Spigot 90L

100002103.idw

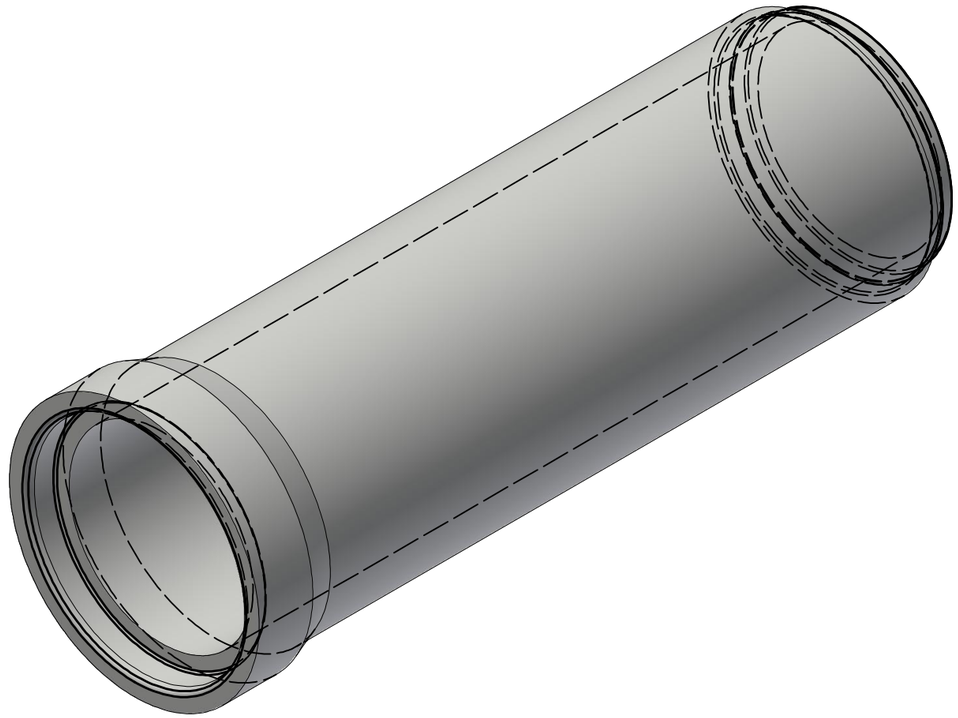

ISO REF

REVISION HISTORY			
NO.	DESCRIPTION	DATE	BY
1	2411-57954	11/11/2024	JW

BURY DEPTH:	to		
WATER LEVEL:		WEIGHT:	2085.53 Lbs
DESIGN SPEC:	ASTM C76/AASHTO M170	LOADING SPEC:	Class 4
REINFORCEMENT TYPE:	WWR Plain	LIFTING TYPE:	None

JENSEN PRECAST EST. 1968

WWW.JENSENPRECAST.COM

©2024 Jensen Precast- All rights reserved.
All materials appearing as Jensen Precast documents and the like are proprietary work product and are protected under U.S. copyright and other laws.
Unless in conjunction with business conducted with Jensen Precast, any use of Jensen Precast work product without express, written consent is prohibited, and recipient is prohibited from distributing any and all work product to non-approved third parties under penalty of civil action.

DESCRIPTION:	RCP P24B Class 4 Bell - Spigot 90L CASTING LAYOUT			REV: A-1
PART NUMBER:	100002103	DRAWN BY:	J. Warren	SHEET: 1 OF 2
CREATED:	3/13/2023	MODIFIED:	11/11/2024	

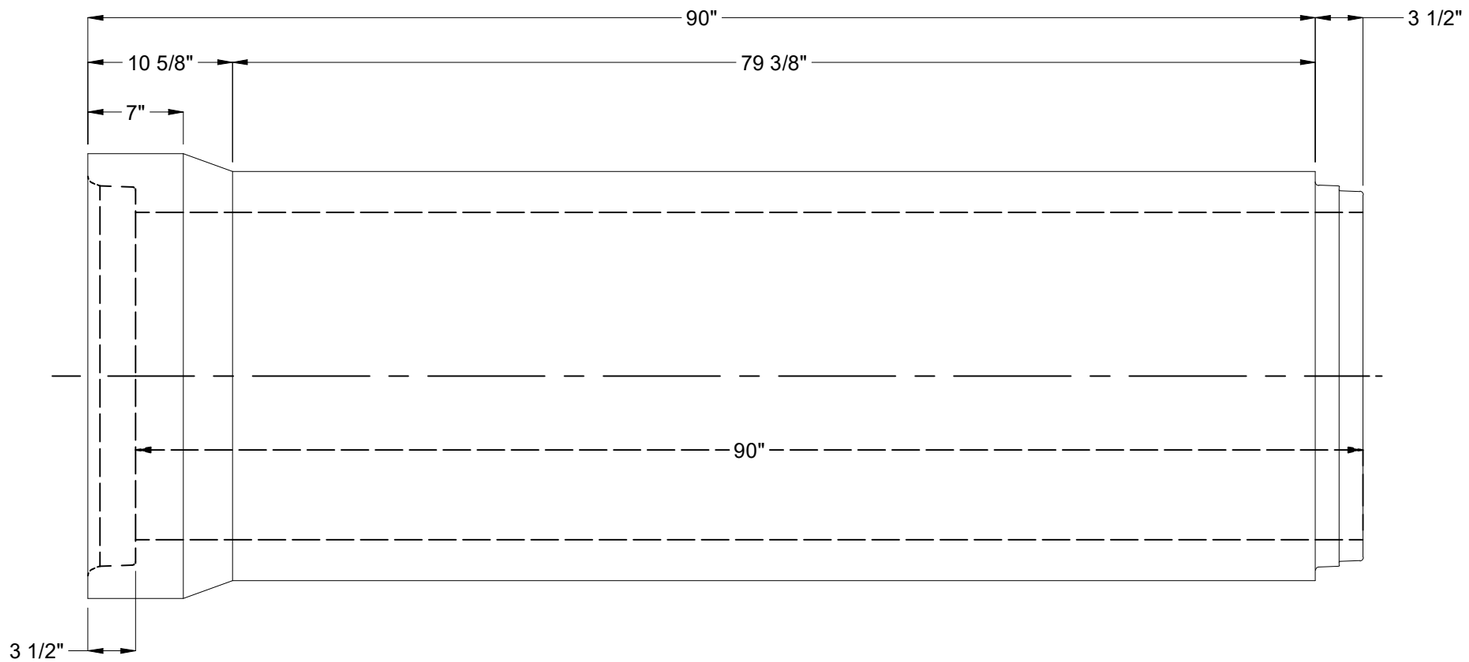

PLAN VIEW

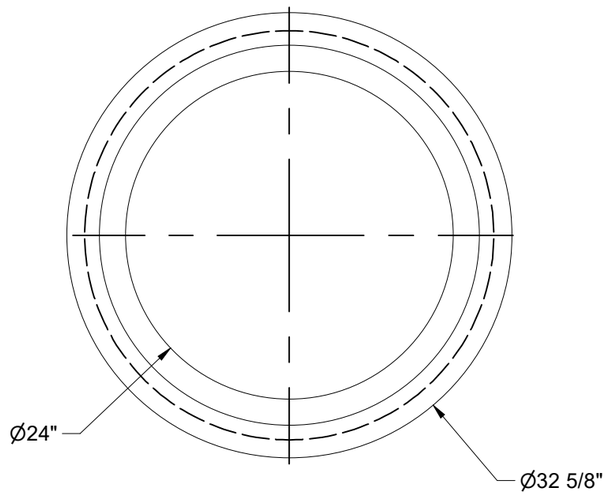

END VIEW

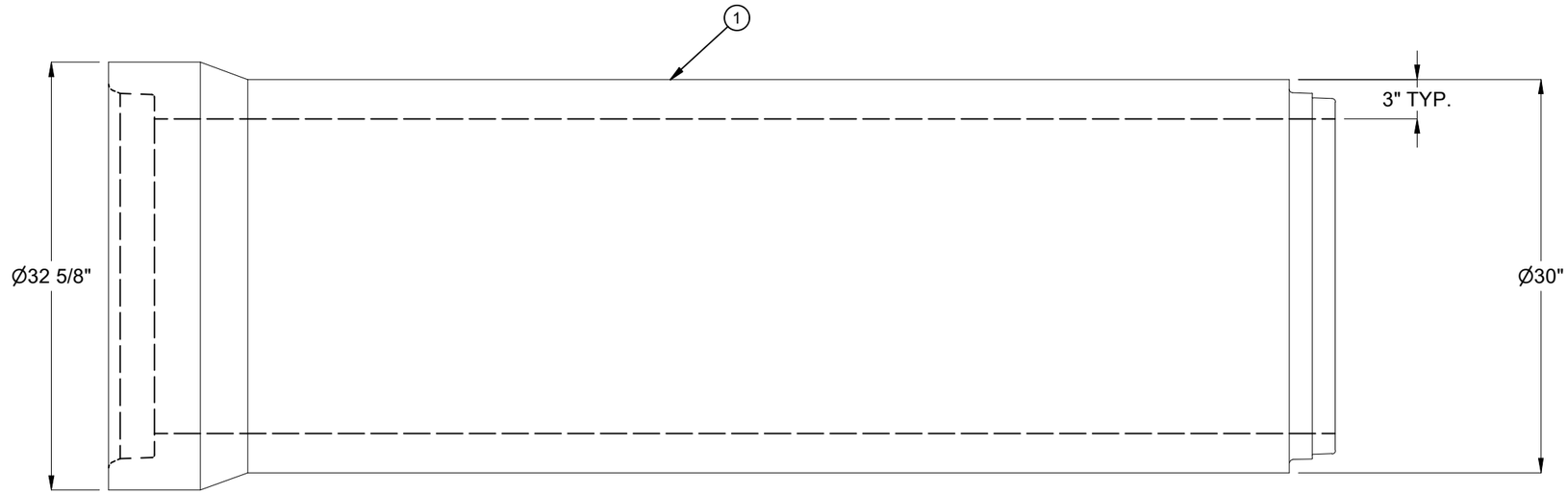

ELEVATION

BURY DEPTH:	to		
WATER LEVEL:		WEIGHT:	2085.53 Lbs
DESIGN SPEC:	ASTM C76/AASHTO M170	LOADING SPEC:	Class 4
REINFORCEMENT TYPE:	WWR Plain	LIFTING TYPE:	None

JENSEN PRECAST EST. 1968

WWW.JENSENPRECAST.COM

©2024 Jensen Precast- All rights reserved.
All materials appearing as Jensen Precast documents and the like are proprietary work product and are protected under U.S. copyright and other laws.
Unless in conjunction with business conducted with Jensen Precast, any use of Jensen Precast work product without express, written consent is prohibited, and recipient is prohibited from distributing any and all work product to non-approved third parties under penalty of civil action.

DESCRIPTION:	RCP P24B Class 4 Bell - Spigot 90L CASTING DRAWING		REV: A-1
PART NUMBER:	100002103	DRAWN BY:	J. Warren
CREATED:	3/13/2023	MODIFIED:	11/11/2024
			SHEET: 2 OF 2

100002103.idw