NOTES
■ FOR COMPLETE DESIGN AND PRODUCT INFORMATION CONTACT JENSEN PRECAST.

BILL OF MATERIALS

ITEM	UNIT QTY	QTY	PART NUMBER	DESCRIPTION
1	0.434 ft^3	0.434 ft^3	100011425	CONCRETE MIX GENERIC 5000 PSI
2	1	1	100039366	REINF HOOP STEEL .25DIA GA ASTM A-1064 11DIA

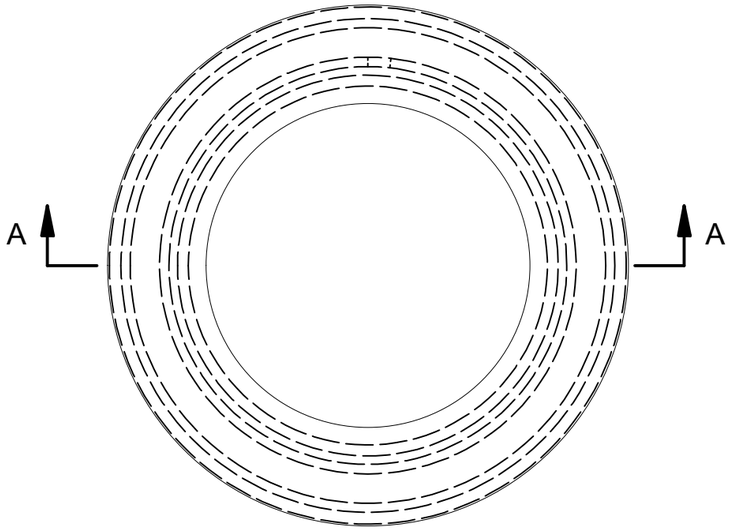

PLAN VIEW

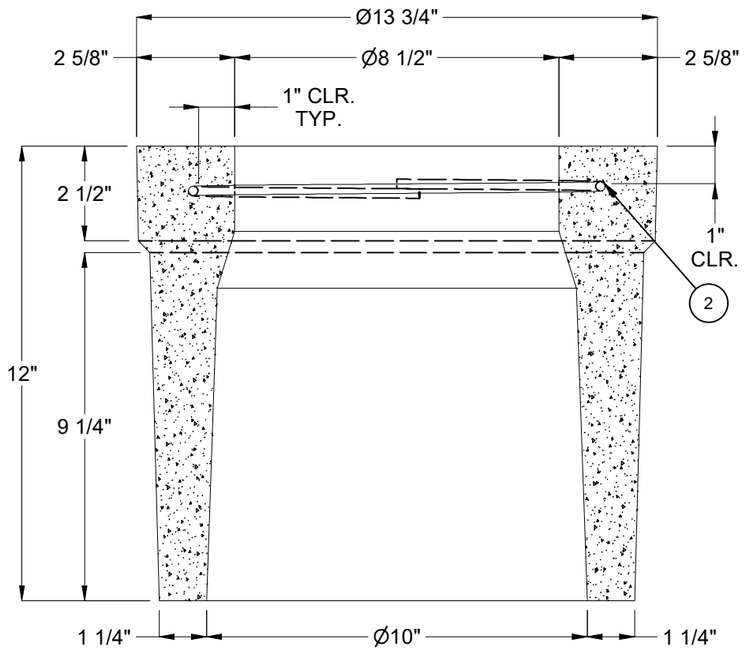

SECTION A-A

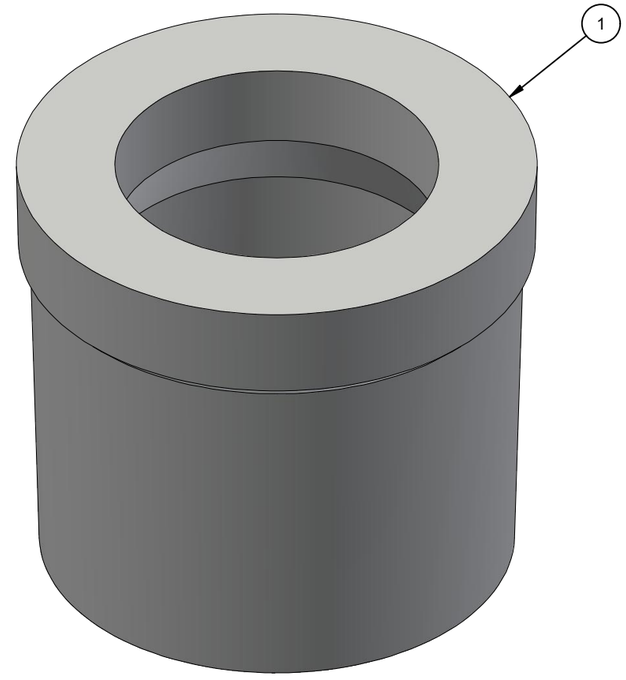

ISOMETRIC

REVISION HISTORY			
REV	DESCRIPTION	DATE	BY
B	DRAWING CREATED	12/20/2021	T.Larson

BURY DEPTH:	N/A to N/A		
WATER LEVEL:	N/A	APPROX. WEIGHT:	65.71 Lbs
DESIGN SPEC:	N/A	LOADING SPEC:	A-16 (AASHTO HS20-44)
REINFORCEMENT TYPE:	Plain Wire	LIFTING TYPE:	None

JENSEN PRECAST EST. 1968

WWW.JENSENPRECAST.COM

©2022 Jensen Precast- All rights reserved.
All materials appearing as Jensen Precast documents and the like are proprietary work product and are protected under U.S. copyright and other laws.
Unless in conjunction with business conducted with Jensen Precast, any use of Jensen Precast work product without express, written consent is prohibited, and recipient is prohibited from distributing any and all work product to non-approved third parties under penalty of civil action.

DESCRIPTION:	HTV D1014x12 Extension CASTING LAYOUT		REV: B-1
PART NUMBER:	100002071	DRAWN BY:	T.Larson
CREATED:	5/6/2020	MODIFIED:	2/10/2022
			SHEET: 1 OF 1

100002071.idw