BILL OF MATERIALS

ITEM	UNIT QTY	QTY	PART NUMBER	DESCRIPTION
1	0.589 ft^3	0.589 ft^3	100035039	CONCRETE COMPOSITE LID MIX BRUCE
2	0.333 ft	0.667 ft	100008155	REINF ROD SMOOTH PENCIL #2 1/4 SS
3	0.847 lbmass	1.694 lbmass	100008157	Combo Mat Fiber Reinforcing 24 Oz

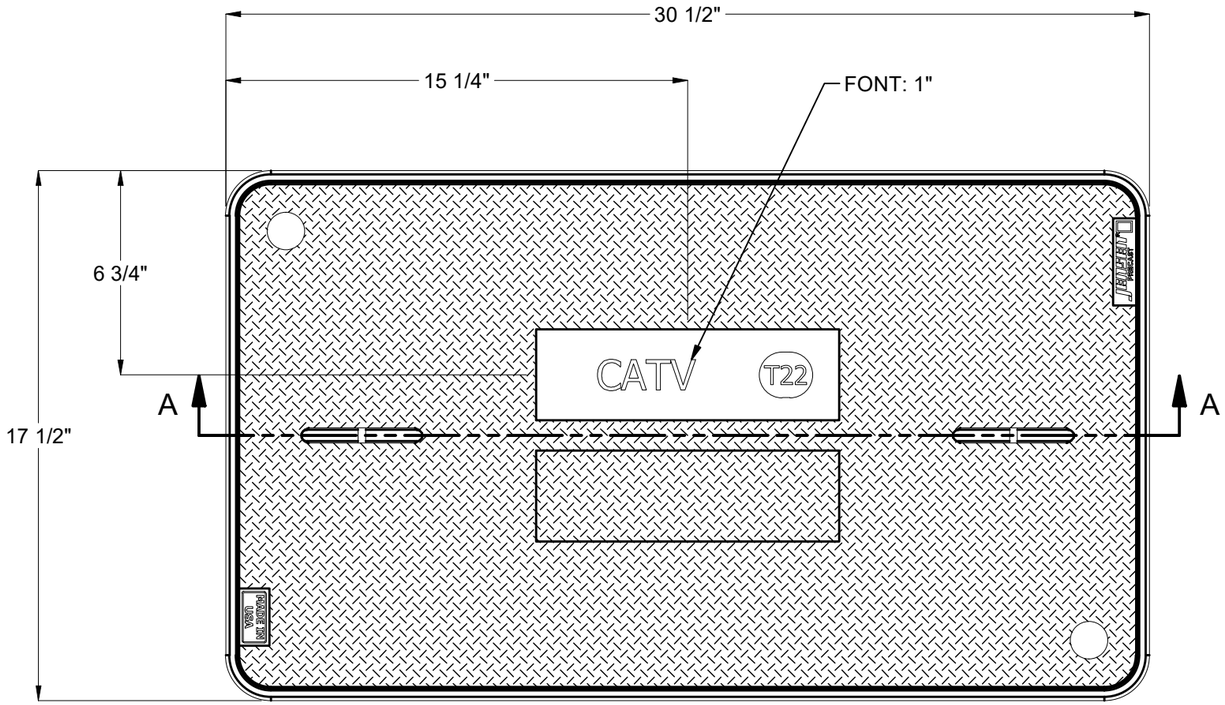

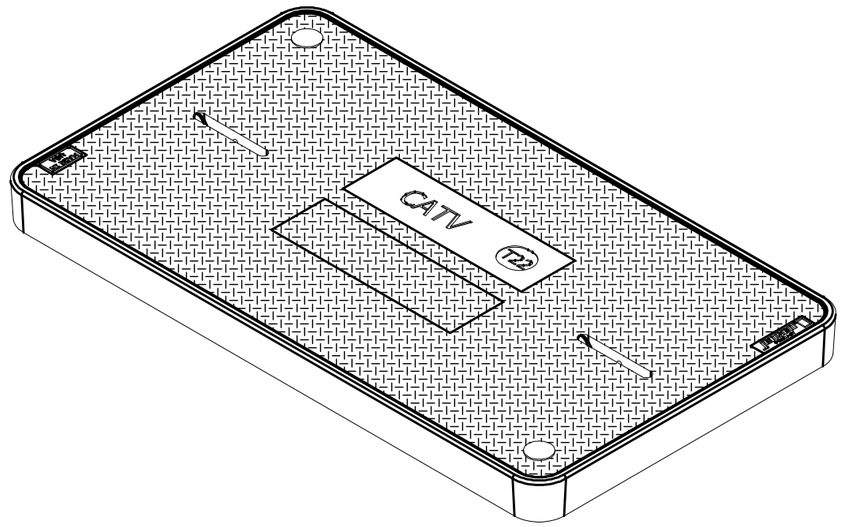

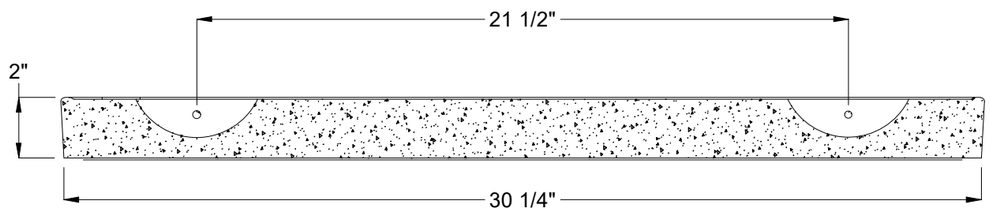

SECTION A-A

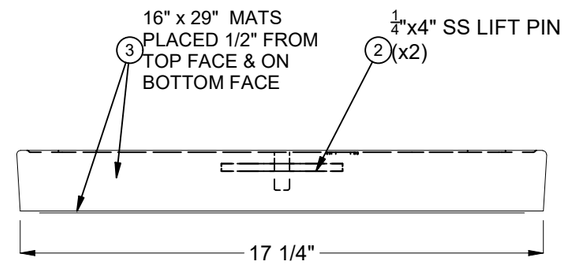

REVISION HISTORY			
REV	DESCRIPTION	DATE	BY
A	DRAWING CREATED	5/5/2022	DJM

DESIGN SPEC: ANSI/SCTE-77	APPROX. WEIGHT: 71.94 lbs	JENSEN PRECAST EST. 1968	©2022 Jensen Precast- All rights reserved. Unless expressly authorized by Jensen Precast any use or duplication is strictly prohibited under penalty of civil action or codes.	DESCRIPTION: HPC 1730 Polymer Cover, Tier-22, Non-Bolt Down, CATV	REV: B-1
AGENCY:	DESIGN/TEST LOAD: 22.5/33.75 kip			PART #: 100002038 / DRAWN BY: D. Morgan	SHEET: 1 OF 1
AGENCY SPEC:	LOADING SPEC: Tier-22			CREATED: 2/19/2019 / MODIFIED: 9/21/2022	

100002038.idw