BILL OF MATERIALS

ITEM	UNIT QTY	QTY	PART NUMBER	DESCRIPTION
1	0.704 ft^3	0.704 ft^3	100035038	CONCRETE COMPOSITE BOX MIX BRUCE
2	1	2	100022548	HPC PLUGS 5/8X1-3/8-14-2 PE-LD67 BLK
3	1	2	100021840	SQUARE NUT 1/2-13 304SS

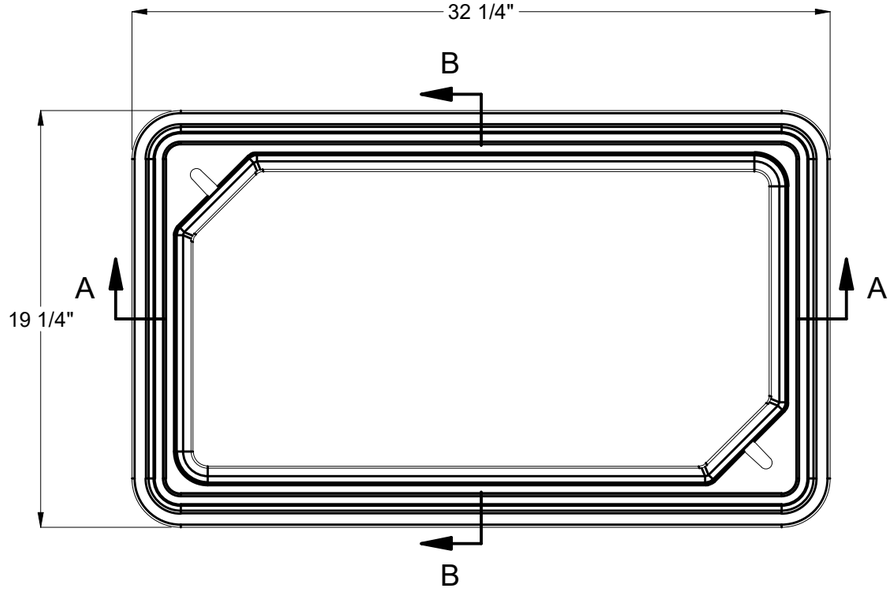

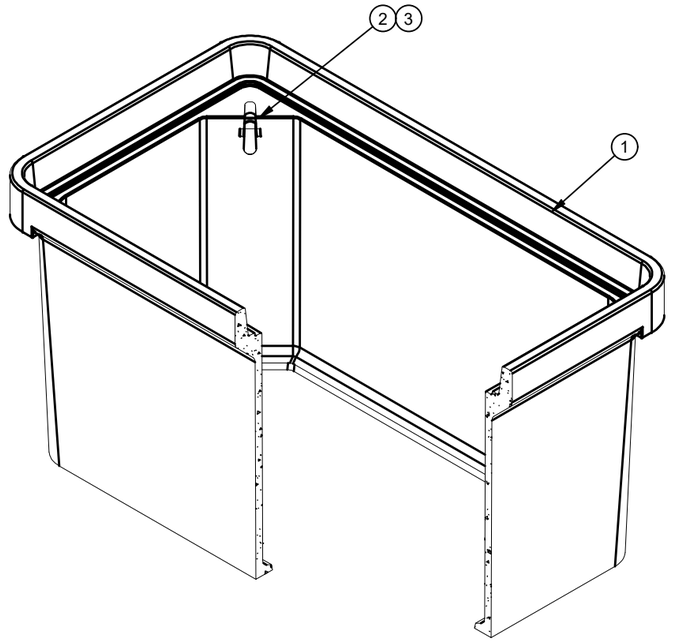

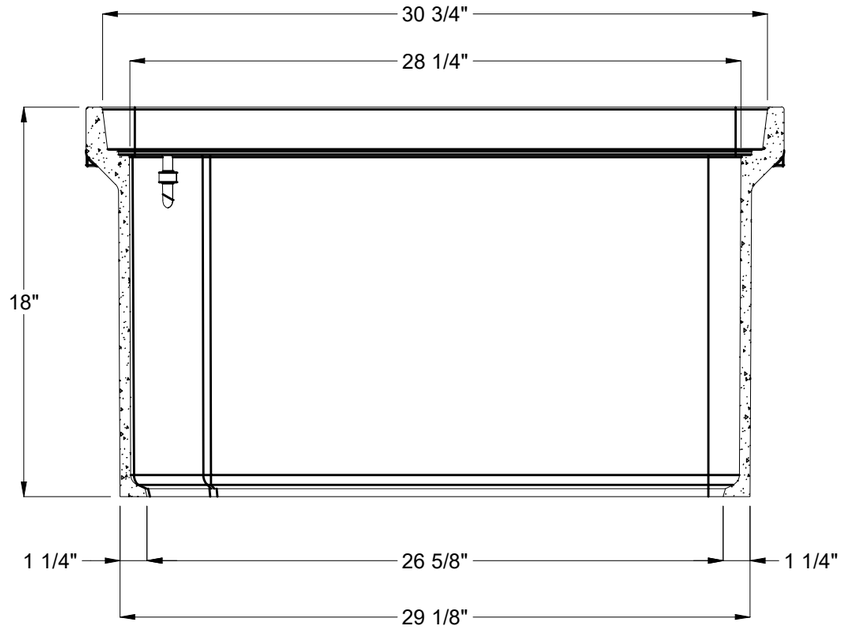

SECTION A-A

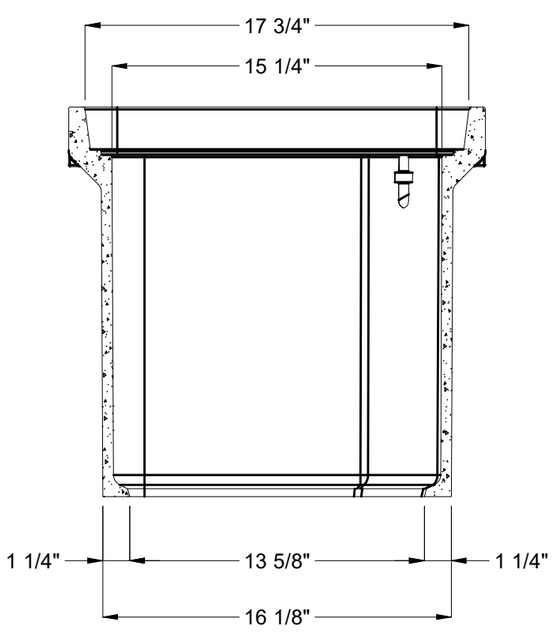

SECTION B-B

REVISION HISTORY

REV	DESCRIPTION	DATE	BY
A	INITIAL RELEASE	11/13/2020	BGD
B	GOT RID OF MOUSEHOLES	11/16/2020	BGD

DESIGN SPEC: ANSI/SCTE-77	APPROX. WEIGHT: 86.05 lbs		
AGENCY:	DESIGN/TEST LOAD: 22.5/33.75 kip		
AGENCY SPEC:	LOADING SPEC: Tier-22		

JENSEN PRECAST EST. 1968

©2022 Jensen Precast- All rights reserved.
Unless expressly authorized by Jensen Precast any use or duplication is strictly prohibited under penalty of civil action or codes.

DESCRIPTION: HPC 1730-18 Polymer Box V0, Tier-22, 1/2-13 SS Nut

REV: C-1

SHEET: 1 OF 1

PART #:	100002035	DRAWN BY:	T.Larson
CREATED:	3/11/2019	MODIFIED:	2/16/2022

100002035.idw