NOTES

- FOR COMPLETE DESIGN AND PRODUCT INFORMATION CONTACT JENSEN PRECAST.

BILL OF MATERIALS

ITEM	UNIT QTY	QTY	PART NUMBER	DESCRIPTION
1	1.229 ft^3	1.229 ft^3	100011425	CONCRETE MIX GENERIC 5000 PSI
2	1	1	100002267	CAP HANDHOLE HN1730
3	1	2	100008416	LIFT TUBE N16 PLASTIC
4	1	2	100007132	SQUARE NUT 3/8-16 ALUM 18-8

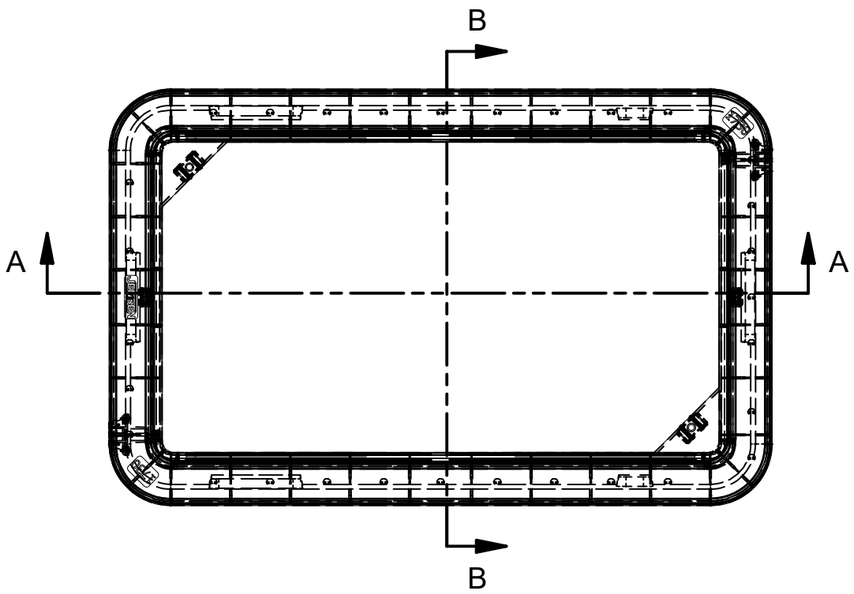

TOP VIEW

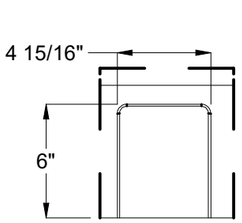

DETAIL A-1

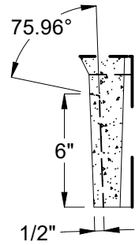

DETAIL A-2

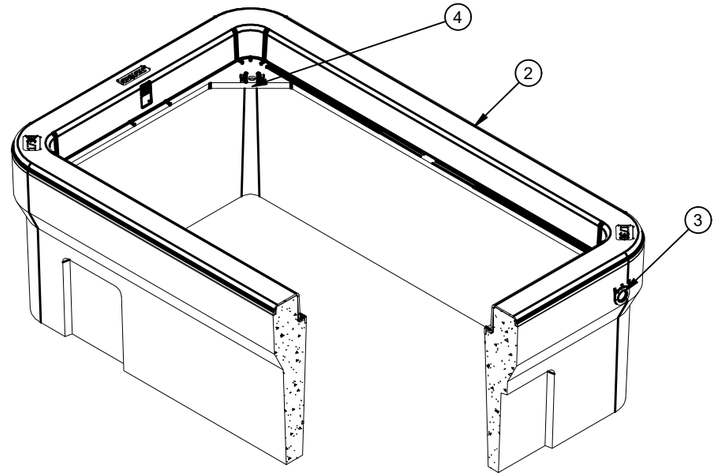

ISO BREAKOUT VIEW

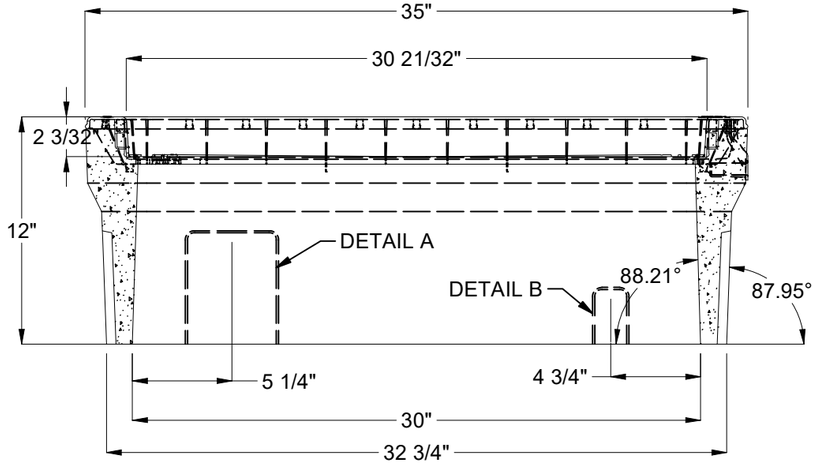

SECTION A-A

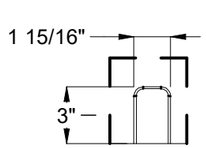

DETAIL B-1

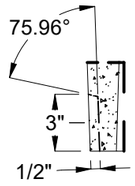

DETAIL B-2

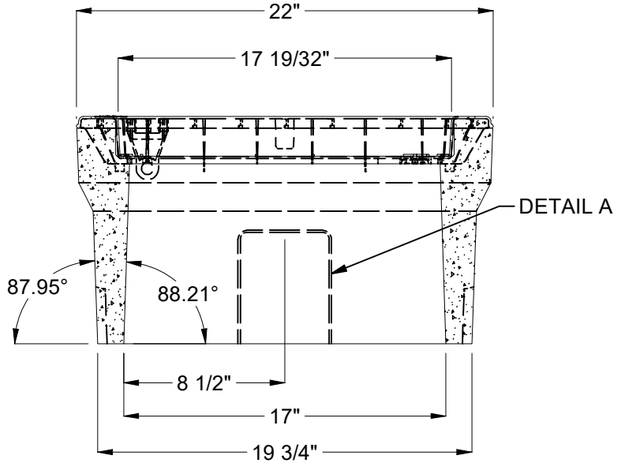

SECTION B-B

CHANGE HISTORY

NO.	DESCRIPTION	DATE	BY
A	INITIAL RELEASE	01/28/2021	BGD
B	SQUARE NUTS ADDED, CALCS REDONE	04/28/2023	MB
C	SECOND LIFT TUBE ADDED	08/25/2023	MB

BURY DEPTH:	N/A to N/A		
WATER LEVEL:	Below Structure	APPROX. WEIGHT:	187.61 Lbs
DESIGN SPEC:	ASTM C857	LOADING SPEC:	A-03 (300 psf)
REINFORCEMENT TYPE:	None	LIFTING TYPE:	Insert

JENSEN PRECAST EST. 1968

WWW.JENSENPRECAST.COM

©2023 Jensen Precast- All rights reserved.
All materials appearing as Jensen Precast documents and the like are proprietary work product and are protected under U.S. copyright and other laws.
Unless in conjunction with business conducted with Jensen Precast, any use of Jensen Precast work product without express, written consent is prohibited, and recipient is prohibited from distributing any and all work product to non-approved third parties under penalty of civil action.

DESCRIPTION:	HN 1730x12 Concrete Box 3/8-16 Alum Nut CASTING LAYOUT		REV: C-1
PART NUMBER:	100002005	DRAWN BY:	M. Baumann
CREATED:	9/17/2020	MODIFIED:	8/24/2023
			SHEET: 1 OF 1

100002005.idw