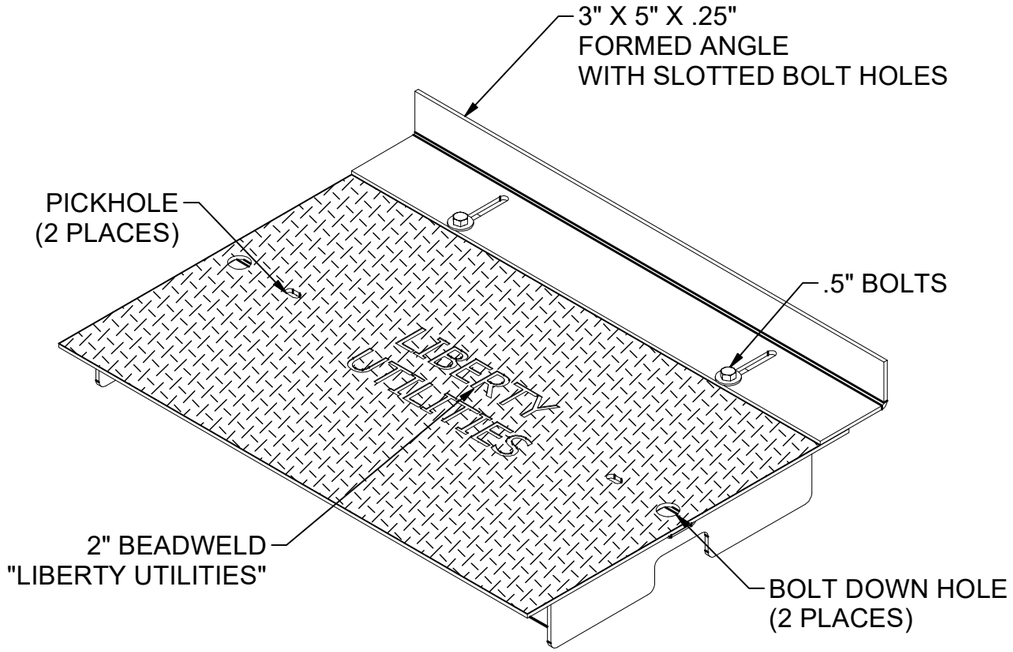

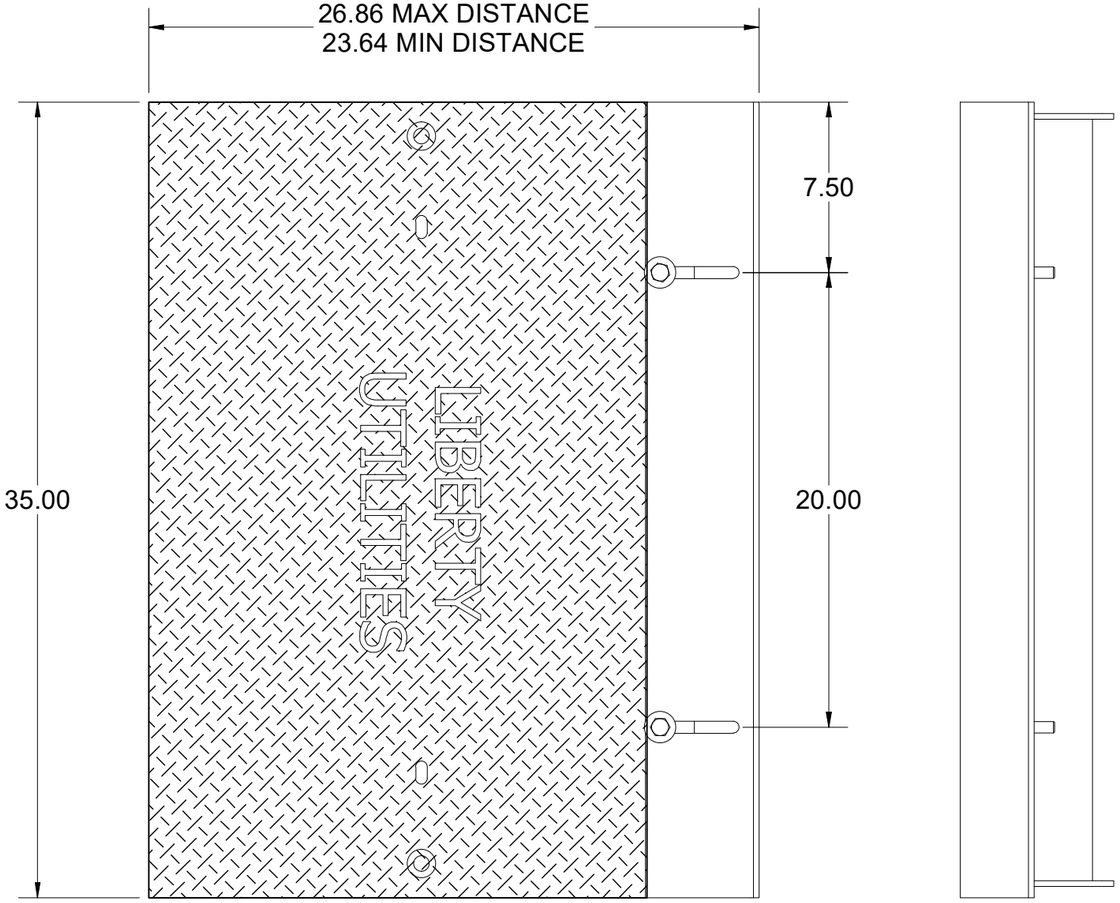

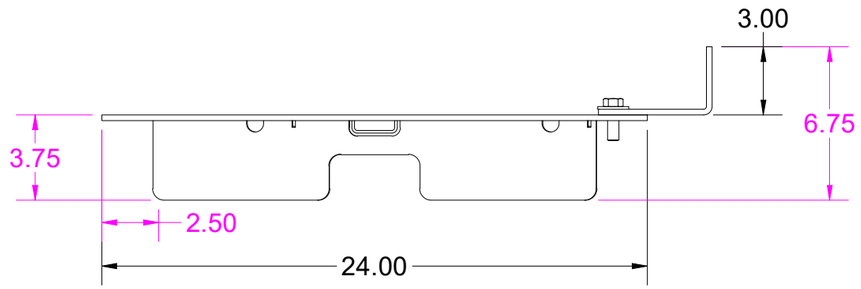

200045738.idw

ASTM C1802: Level 02

300 psf, or 600 lb load on 5.5" x 5.5" footprint restricted to areas of pedestrian use and light maintenance vehicles use, and other areas that are inaccessible to all other vehicle traffic.

SURFACE:	Diamond Plate	FINISH:	Painted
WEIGHT:	128.62 lbs	MARKING:	None

JENSEN METALTECH

450 E. GLENDALE AVE. SPARKS. NV 89431
775-352-2716 FAX: 755-358-8127
JENSENMETALTECH.COM

©2020 Jensen Precast- All rights reserved. All materials appearing as Jensen Precast documents and the like are proprietary work product and are protected under U.S. copyright and other laws. Unless in conjunction with business conducted with Jensen Precast, any use of Jensen Precast work product without express, written consent is prohibited, and recipient is prohibited from distributing any and all work product to non-approved third parties under penalty of civil action.

DESCRIPTION: TRDAS1-SD-2435-D2-DP-P-BLACK-SP-BW-LIBERTY UTILITIES-END

24x35 Door Assembly (ASTM Load Level 02, Single Door, Steel, Drag Off, Pickhole, Diamond Plate, Painted BLACK, , END)

REV:

SHEET: 1

PART NUMBER:	200045738	DRAWN BY:	E. Massey
CREATED:	1/27/2020	MODIFIED:	10/28/2020

BILL OF MATERIALS

ITEM	UNIT QTY	QTY	PART NUMBER	DESCRIPTION
1	1	2	100003823	BOLT HEX 1/2-13 UNC 1.5 ZINC
2	1	1	200045739	TRDAS1-SD-2435-D2-DP-P-BLACK-SP-BW-LIBERTY UTILITIES
3	1	1	200035094	TRENCH DOOR ANGLE
4	1	2	100011418	WASHER FLAT 1/2 X 1 3/8 USS TYPE A ZINC

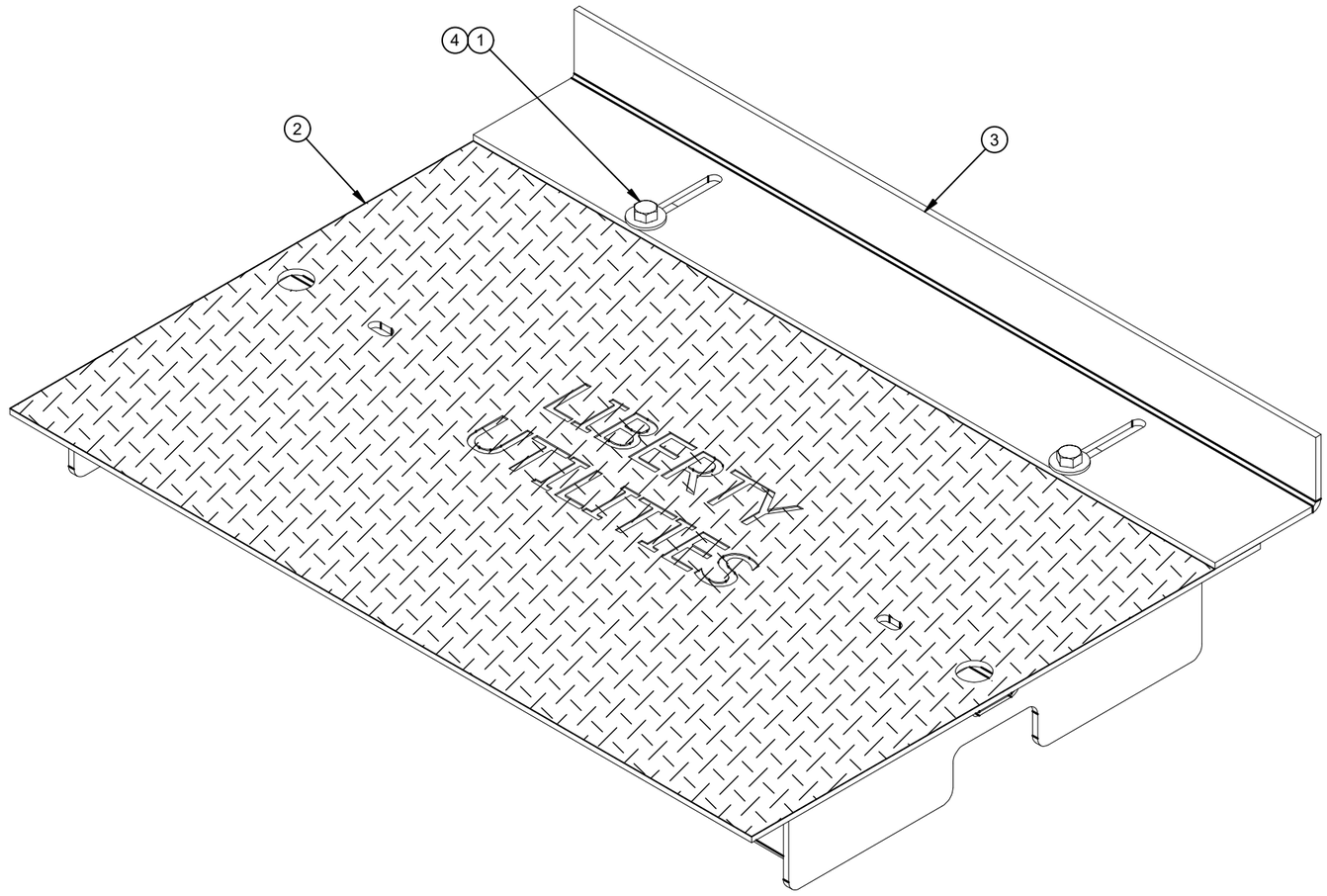

200045738.idw

MATERIAL FINISH: Painted	JENSEN METALTECH 450 E. GLENDALE AVE. SPARKS. NV 89431 775-352-2716 FAX: 755-358-8127 *JENSENMETALTECH.COM*	©2020 Jensen Precast- All rights reserved. All materials appearing as Jensen Precast documents and the like are proprietary work product and are protected under U.S. copyright and other laws. Unless in conjunction with business conducted with Jensen Precast, any use of Jensen Precast work product without express, written consent is prohibited, and recipient is prohibited from distributing any and all work product to non-approved third parties under penalty of civil action.	PART NUMBER & DESCRIPTION: 200045738 TRDAS1-SD-2435-D2-DP-P-BLACK-SP-BW-LIBERTY UTILITIES-END
MATERIAL SURFACE: Diamond Plate			WEIGHT: N/A / DRAWN BY: E. Massey / CREATED: 1/27/2020 / MODIFIED: 10/28/2020

REV: A-1

SHEET: 1

BURN LIST - BOM

ITEM QTY	PART NUMBER	DESCRIPTION	STOCK NUMBER	MATERIAL	MASS
2	100007735	Door Component Steel Side Bar	100007735	STL ASTM A36 SM-HRPO RAW .250	4.115 lbmass
1	100007736	Door Component Steel Plate, Top	100007736	SHT STL CQ DP RAW .25	65.426 lbmass
2	100007807	Door Component Steel Channel	100007807	STL ASTM A36 GA-11 SM-HRS RAW .1196	12.192 lbmass
1	200035094	TRENCH DOOR ANGLE	100007735	STL ASTM A36 SM-HRPO RAW .250	18.718 lbmass

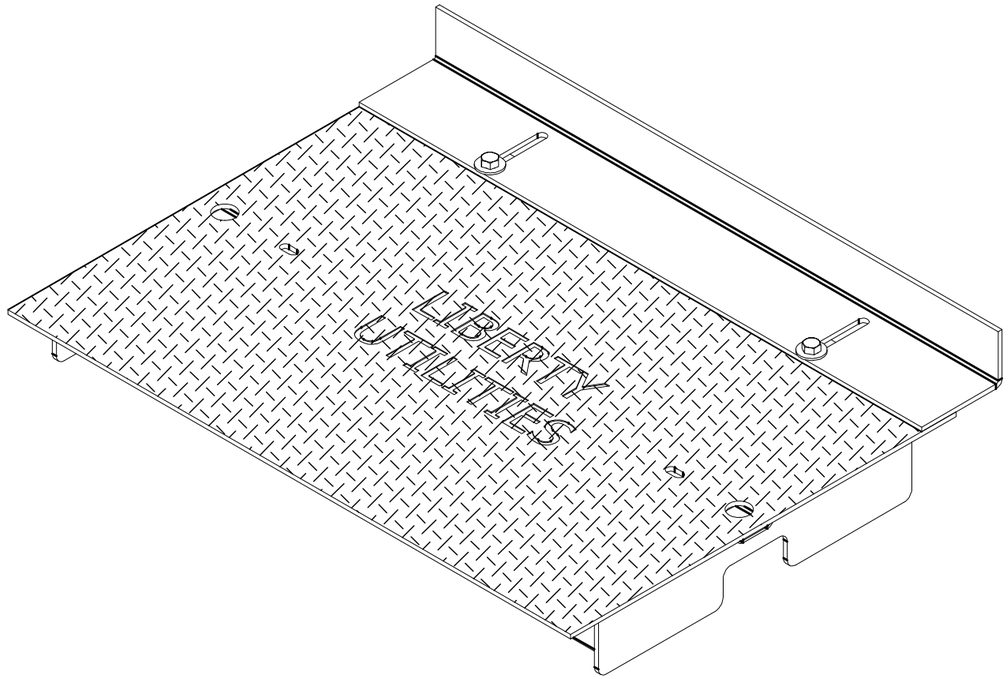

200045738.idw

MATERIAL FINISH: Painted	JENSEN METALTECH 450 E. GLENDALE AVE. SPARKS. NV 89431 775-352-2716 FAX: 755-358-8127 *JENSENMETALTECH.COM*	©2020 Jensen Precast- All rights reserved. All materials appearing as Jensen Precast documents and the like are proprietary work product and are protected under U.S. copyright and other laws. Unless in conjunction with business conducted with Jensen Precast, any use of Jensen Precast work product without express, written consent is prohibited, and recipient is prohibited from distributing any and all work product to non-approved third parties under penalty of civil action.	PART NUMBER & DESCRIPTION: 200045738 TRDAS1-SD-2435-D2-DP-P-BLACK-SP-BW-LIBERTY UTILITIES-END	REV: A-1
MATERIAL SURFACE: Diamond Plate			WEIGHT: N/A / DRAWN BY: E. Massey	SHEET: 2
			CREATED: 1/27/2020 / MODIFIED: 10/28/2020	

BILL OF MATERIALS

ITEM	UNIT QTY	QTY	PART NUMBER	DESCRIPTION
1	1	1	100001907	TRDAS1-SD-2435-D2-DP-P-BLACK-SP-BW-NVE ELECTRIC

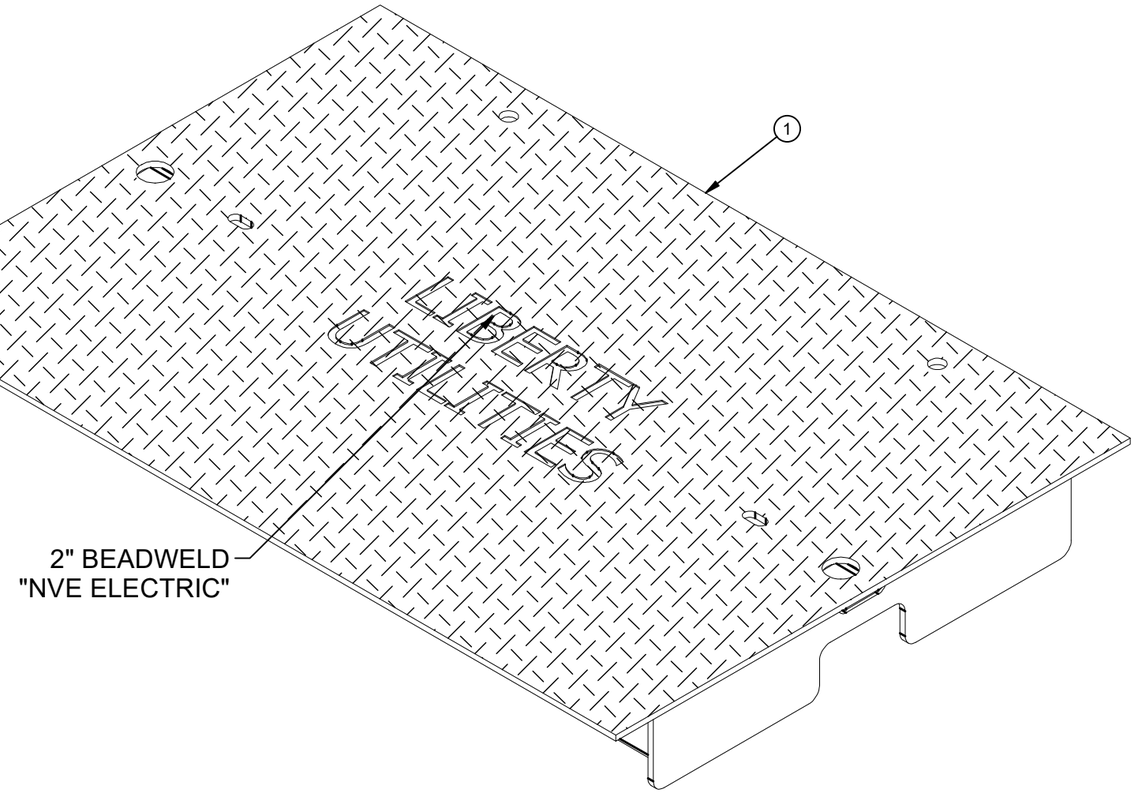

MATERIAL FINISH: Painted	JENSEN METALTECH 450 E. GLENDALE AVE. SPARKS. NV 89431 775-352-2716 FAX: 755-358-8127 *JENSENMETALTECH.COM*	©2020 Jensen Precast- All rights reserved. All materials appearing as Jensen Precast documents and the like are proprietary work product and are protected under U.S. copyright and other laws. Unless in conjunction with business conducted with Jensen Precast, any use of Jensen Precast work product without express, written consent is prohibited, and recipient is prohibited from distributing any and all work product to non-approved third parties under penalty of civil action.	PART NUMBER & DESCRIPTION: 200045739 TRDAS1-SD-2435-D2-DP-P-BLACK-SP-BW-LIBERTY UTILITIES	REV: A-1
MATERIAL SURFACE: Diamond Plate			WEIGHT: N/A / DRAWN BY: E. Massey	SHEET: 3
			CREATED: 1/27/2020 / MODIFIED: 10/28/2020	

200045738.idw

BILL OF MATERIALS

ITEM	UNIT QTY	QTY	PART NUMBER	DESCRIPTION
2	12.192 lbmass	24.384 lbmass	100007807	Door Component Steel Channel
3	65.426 lbmass	65.426 lbmass	100007736	Door Component Steel Plate, Top
4	4.115 lbmass	9.378 lbmass	100007735	Door Component Steel Side Bar
1	1	2	200015371	J CONE BASE

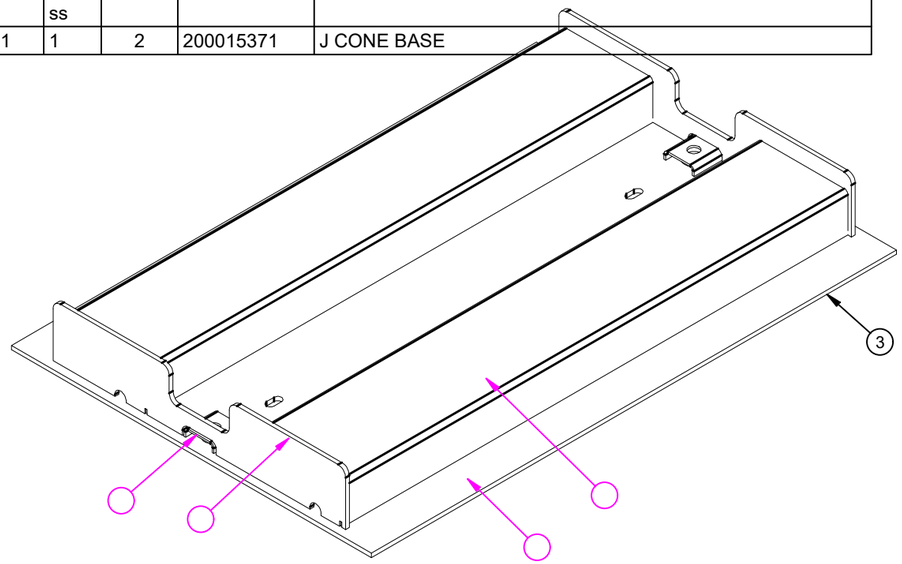

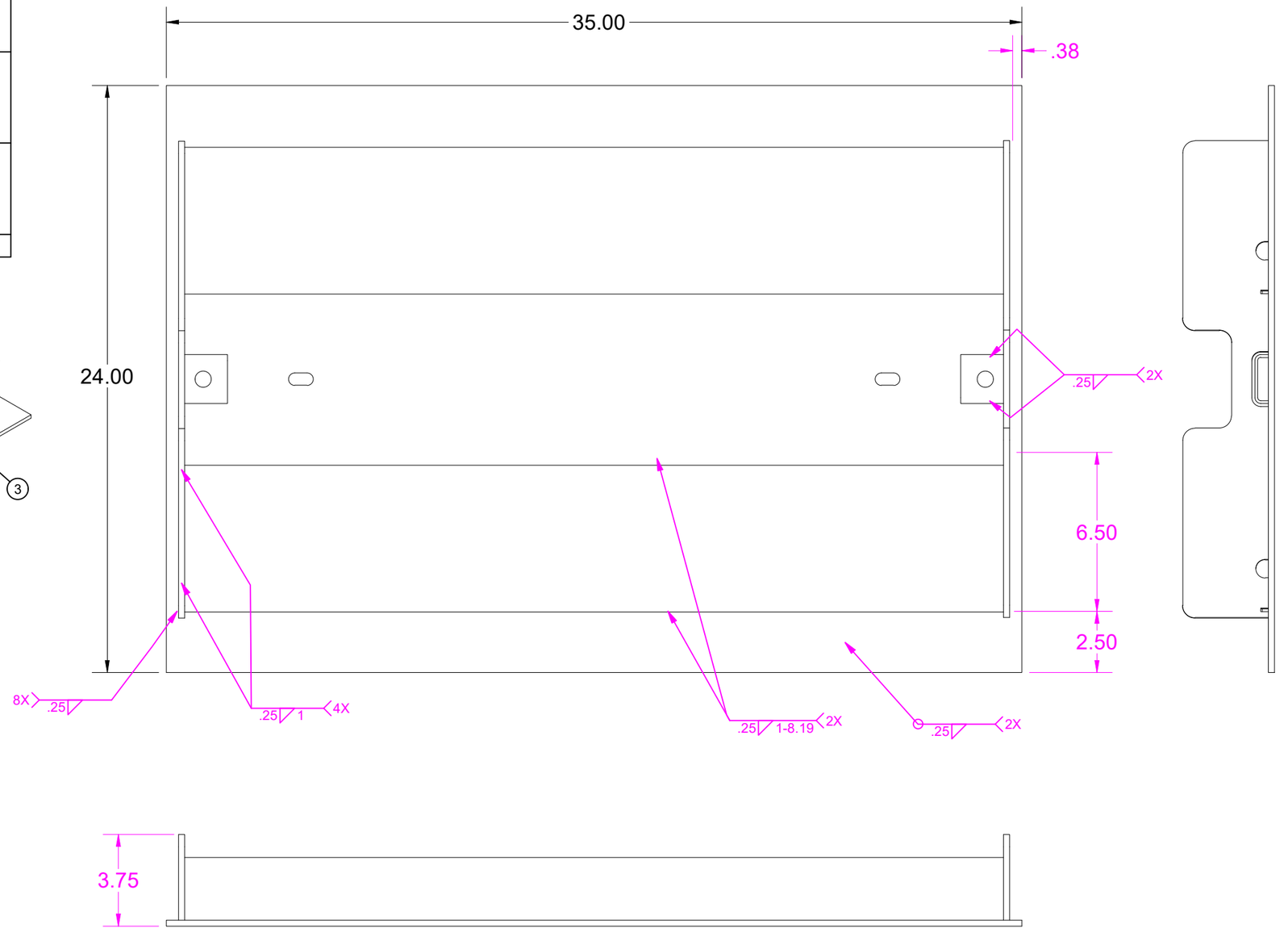

200045738.idw

MATERIAL FINISH: Painted	JENSEN METALTECH 450 E. GLENDALE AVE. SPARKS. NV 89431 775-352-2716 FAX: 755-358-8127 *JENSENMETALTECH.COM*	©2020 Jensen Precast- All rights reserved. All materials appearing as Jensen Precast documents and the like are proprietary work product and are protected under U.S. copyright and other laws. Unless in conjunction with business conducted with Jensen Precast, any use of Jensen Precast work product without express, written consent is prohibited, and recipient is prohibited from distributing any and all work product to non-approved third parties under penalty of civil action.	PART NUMBER & DESCRIPTION: 100001907 TRDAS1-SD-2435-D2-DP-P-BLACK-SP-BW-NVE ELECTRIC
MATERIAL SURFACE: Diamond Plate			WEIGHT: 98.383 lbmass DRAWN BY: E. Massey CREATED: 9/27/2019 MODIFIED: 10/28/2020

REV: C-2

SHEET: 4

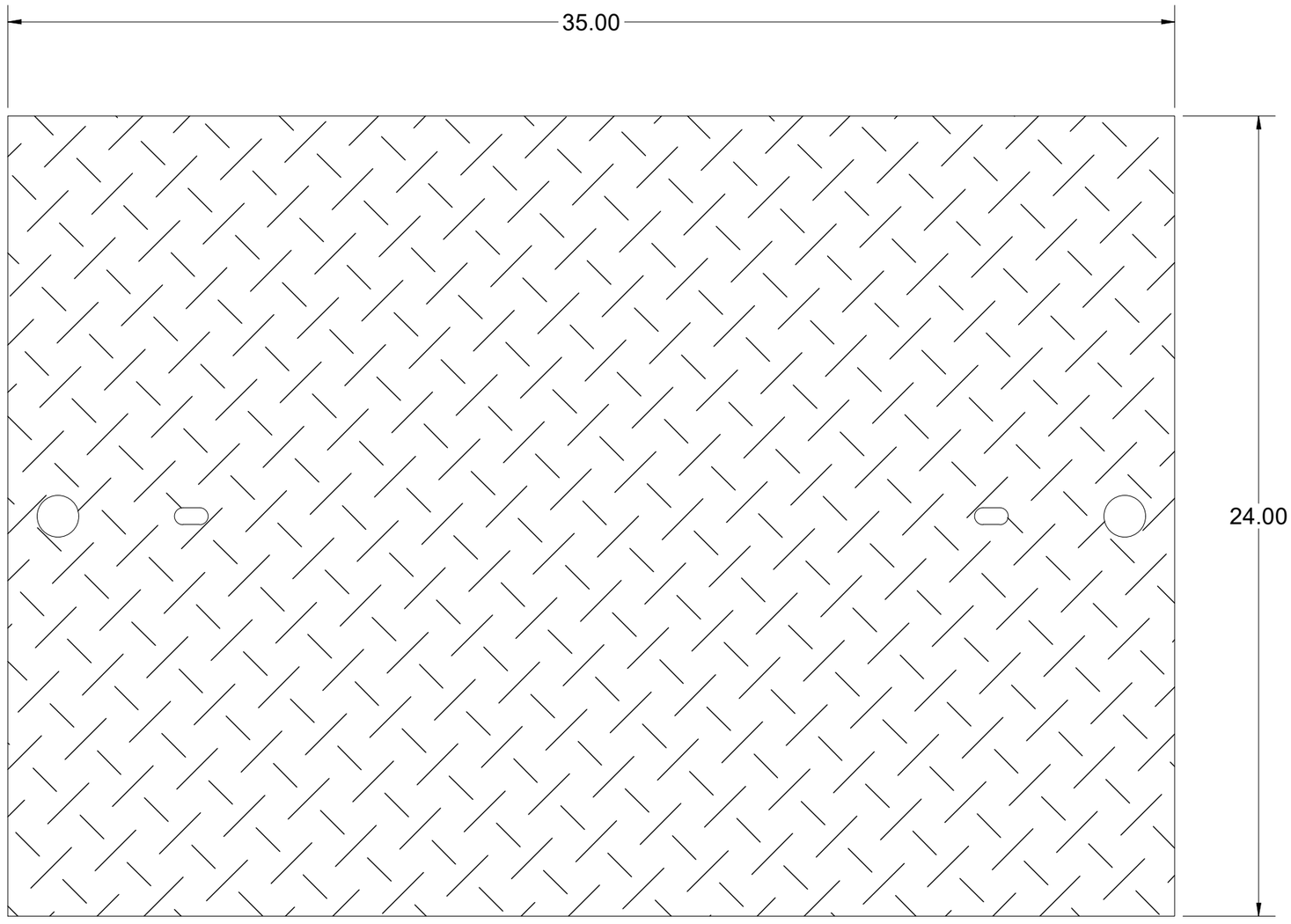

200045738.idw

BEND TABLE				MATERIAL IFS: 100007736
BEND RADIUS	V-OPENING	BEND ANGLE	BEND DEDUCTION	MATERIAL THK: 0.25
-	-	-	-	MAT DESCRIPTION: SHT STL CQ DP RAW .25

JENSEN METALTECH
450 E. GLENDALE AVE. SPARKS. NV 89431
775-352-2716 FAX: 755-358-8127
JENSENMETALTECH.COM

©2020 Jensen Precast- All rights reserved.
All materials appearing as Jensen Precast documents and the like are proprietary work product and are protected under U.S. copyright and other laws.
Unless in conjunction with business conducted with Jensen Precast, any use of Jensen Precast work product without express, written consent is prohibited, and recipient is prohibited from distributing any and all work product to non-approved third parties under penalty of civil action.

NAME & DESCRIPTION: 200035075 Door Component Steel Plate, Top		REV: B-1
WEIGHT: 65.426 lbmass	DRAWN BY: E. Massey	SHEET: 5 OF 8
CREATED: 9/27/2019	MODIFIED: 10/28/2020	

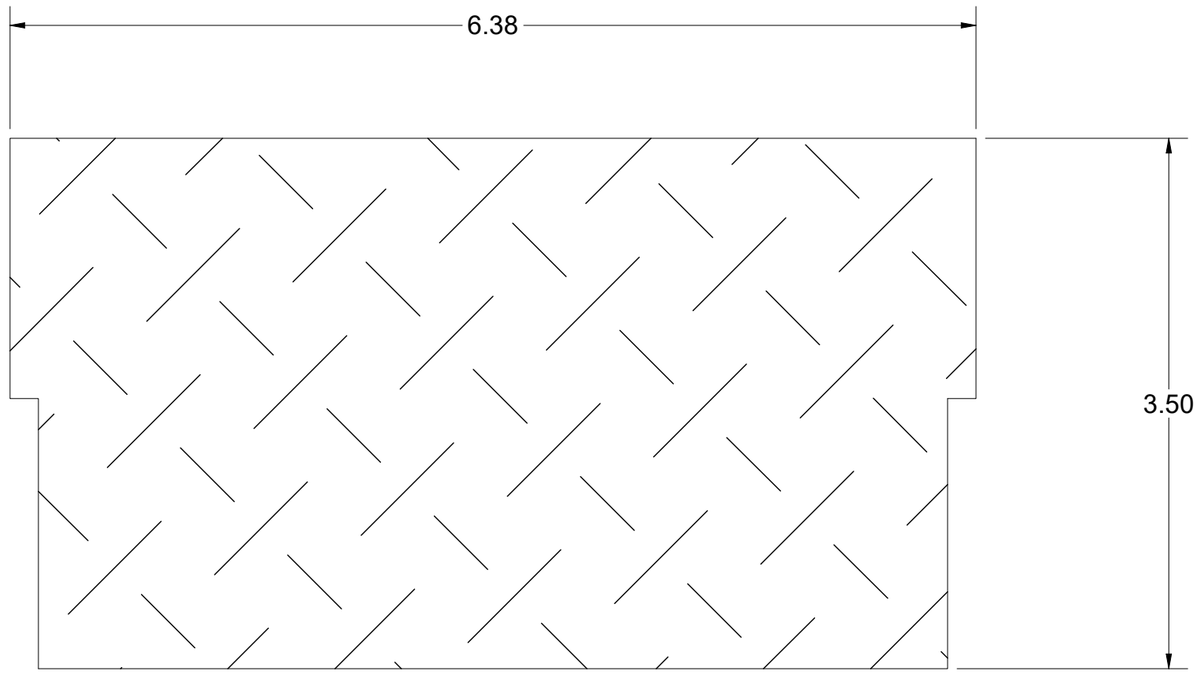

BEND TABLE			
BEND RADIUS	V-OPENING	BEND ANGLE	BEND DEDUCTION
-	-	-	-

MATERIAL IFS: 100007736

MATERIAL THK: 0.25

MAT DESCRIPTION: SHT STL CQ DP RAW .25

JENSEN METALTECH
450 E. GLENDALE AVE. SPARKS. NV 89431
775-352-2716 FAX: 755-358-8127
JENSENMETALTECH.COM

©2020 Jensen Precast- All rights reserved.
All materials appearing as Jensen Precast documents and the like are proprietary work product and are protected under U.S. copyright and other laws.
Unless in conjunction with business conducted with Jensen Precast, any use of Jensen Precast work product without express, written consent is prohibited, and recipient is prohibited from distributing any and all work product to non-approved third parties under penalty of civil action.

NAME & DESCRIPTION: 200035073
Door Component Steel Side Bar

REV: B-1

WEIGHT: 1.693 lbmass

DRAWN BY: E. Massey

SHEET: 6 OF 8

CREATED: 9/27/2019

MODIFIED: 10/28/2020

200045738.idw

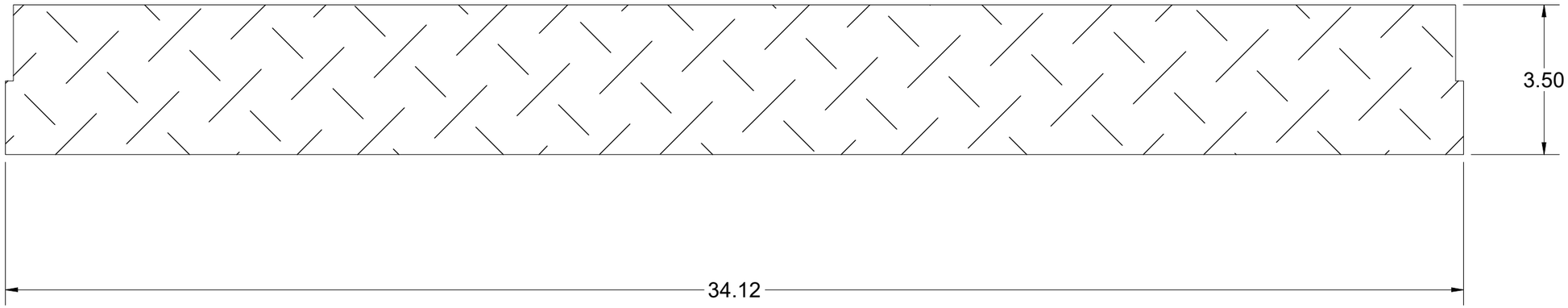

BEND TABLE				MATERIAL IFS: 100007736
BEND RADIUS	V-OPENING	BEND ANGLE	BEND DEDUCTION	MATERIAL THK: 0.25
-	-	-	-	MAT DESCRIPTION: SHT STL CQ DP RAW .25

450 E. GLENDALE AVE. SPARKS. NV 89431
775-352-2716 FAX: 755-358-8127
JENSENMETALTECH.COM

©2020 Jensen Precast- All rights reserved.
All materials appearing as Jensen Precast documents and the like are proprietary work product and are protected under U.S. copyright and other laws.
Unless in conjunction with business conducted with Jensen Precast, any use of Jensen Precast work product without express, written consent is prohibited, and recipient is prohibited from distributing any and all work product to non-approved third parties under penalty of civil action.

NAME & DESCRIPTION: 200035074 Door Component Steel Stiffener, Bar		REV: B-1
WEIGHT: 9.287 lbmass	DRAWN BY: E. Massey	SHEET: 7 OF 8
CREATED: 9/27/2019	MODIFIED: 10/28/2020	

200045738.idw

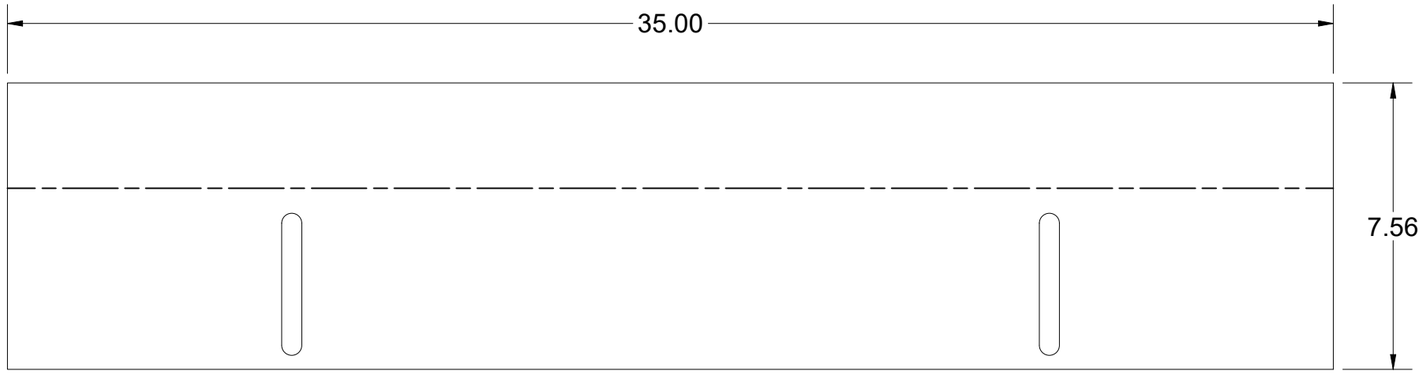

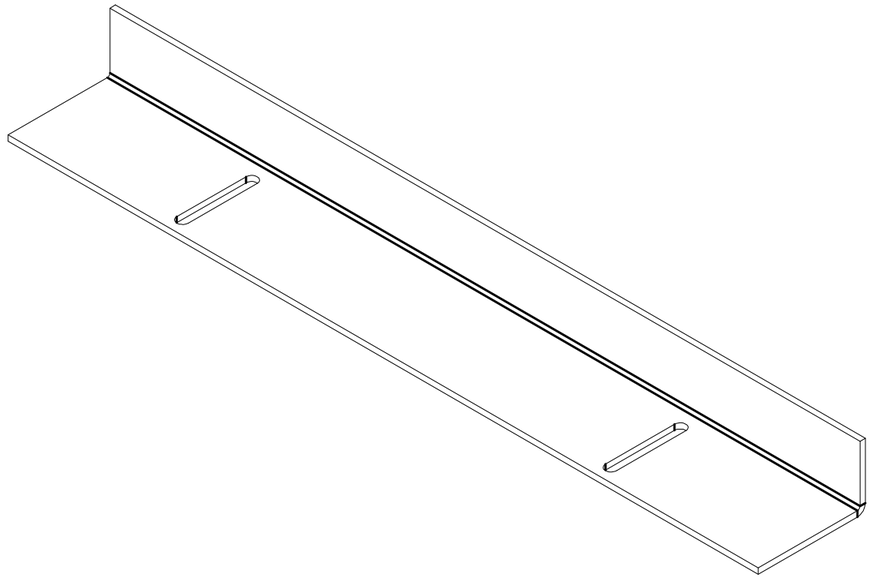

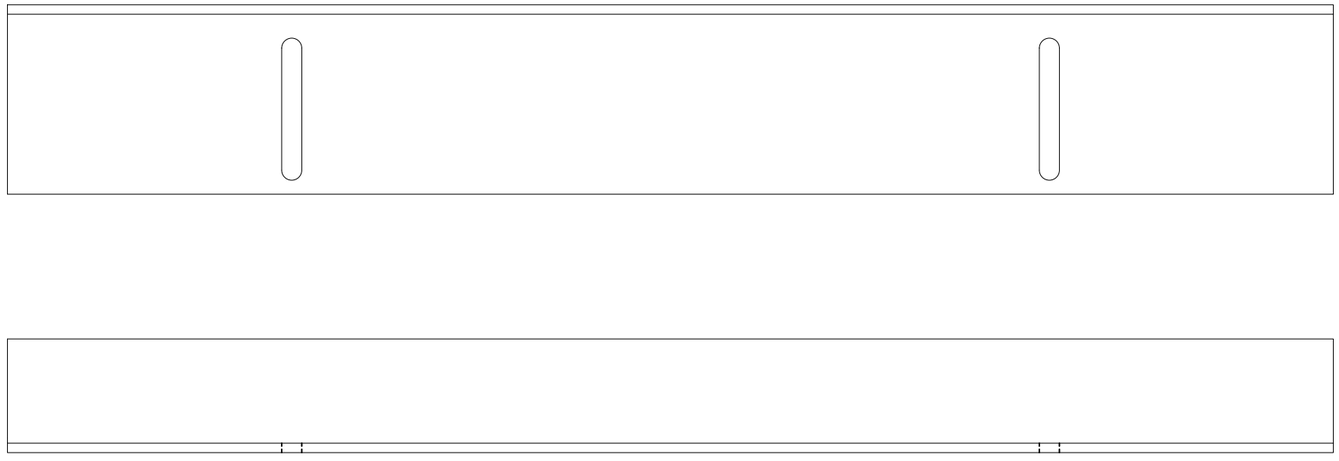

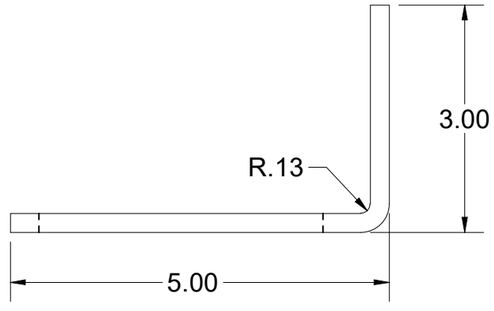

BEND TABLE				MATERIAL IFS: 100007735
BEND RADIUS	V-OPENING	BEND ANGLE	BEND DEDUCTION	MATERIAL THK: 0.25
0.125	2"	90	0.440	MAT DESCRIPTION: STL ASTM A36 SM-HRPO RAW .250

JENSEN METALTECH
450 E. GLENDALE AVE. SPARKS. NV 89431
775-352-2716 FAX: 755-358-8127
JENSENMETALTECH.COM

©2020 Jensen Precast- All rights reserved.
All materials appearing as Jensen Precast documents and the like are proprietary work product and are protected under U.S. copyright and other laws.
Unless in conjunction with business conducted with Jensen Precast, any use of Jensen Precast work product without express, written consent is prohibited, and recipient is prohibited from distributing any and all work product to non-approved third parties under penalty of civil action.

NAME & DESCRIPTION: 200035094 TRENCH DOOR ANGLE		REV: A
WEIGHT: 18.718 lbmass	DRAWN BY: E. Massey	SHEET: 8 OF 8
CREATED: 1/27/2020	MODIFIED: 10/28/2020	

200045738.idw