NOTES
■ FOR COMPLETE DESIGN AND PRODUCT INFORMATION CONTACT JENSEN PRECAST.

BILL OF MATERIALS

ITEM	QTY	PART NUMBER	DESCRIPTION
1	28.014 ft^3	100011425	CONCRETE MIX GENERIC 5000 PSI
2	1	100018866	REINFORCING MAT 100018866
3	3	100004880	ANCHOR UTILITY .671DIA 5.625-SLAB GALV P75 6UA671

100001852.idw

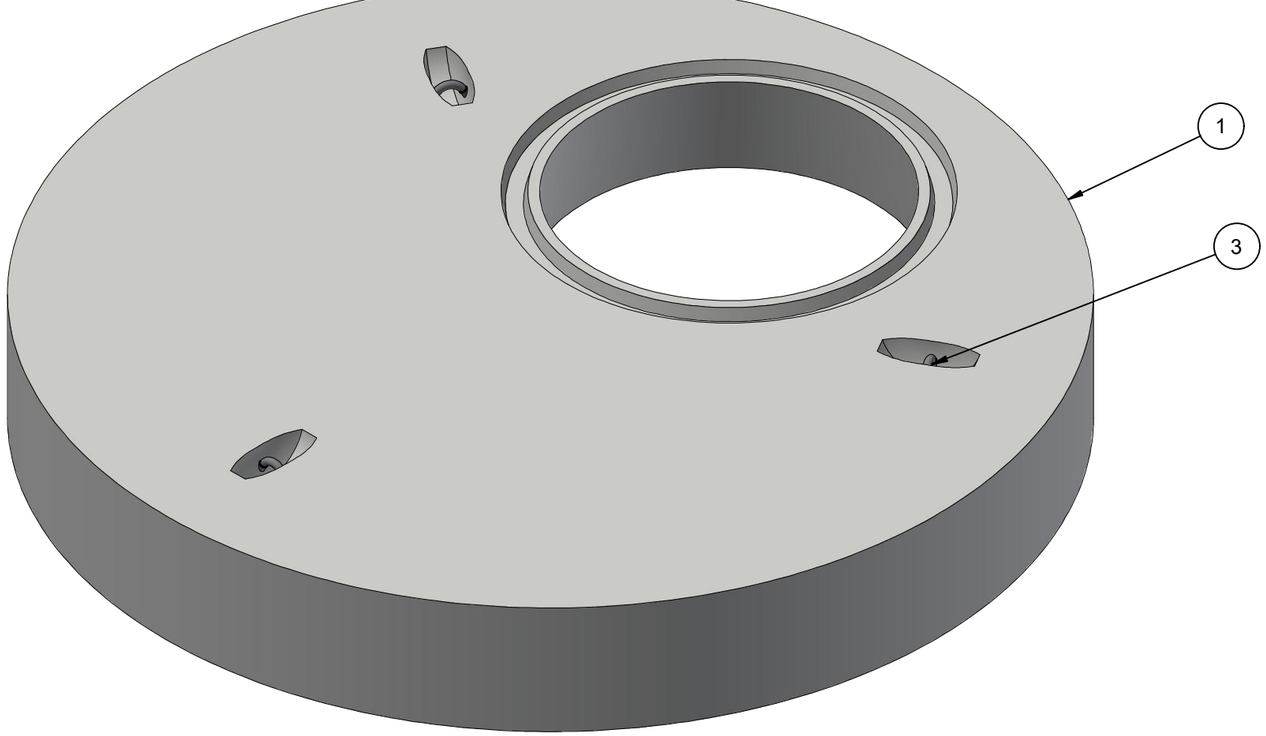

ISOMETRIC VIEW

LIFTING NOTES
■ THIS CONCRETE PRODUCT IS DESIGNED TO BE LIFTED AT 2500 PSI WITH 3 LIFT CONNECTIONS EQUALLY LOADED TO 3 LIFTING POINTS AT A MINIMUM 60° SLING ANGLE, MEASURED FROM HORIZONTAL.

BURY DEPTH:	0.0' - 5.0' to Top of Top Slab		
WATER LEVEL:	0.0'	WEIGHT:	4213.64 Lbs
DESIGN SPEC:	ASTM C890,ACI 318	LOADING SPEC:	A-16 (AASHTO HS20-44)
REINFORCEMENT TYPE:	Rebar	LIFTING TYPE:	A-Anchor

JENSEN PRECAST EST. 1968

WWW.JENSENPRECAST.COM

©2019 Jensen Precast- All rights reserved.
All materials appearing as Jensen Precast documents and the like are proprietary work product and are protected under U.S. copyright and other laws.
Unless in conjunction with business conducted with Jensen Precast, any use of Jensen Precast work product without express, written consent is prohibited, and recipient is prohibited from distributing any and all work product to non-approved third parties under penalty of civil action.

REVISION HISTORY

REV	DESCRIPTION	DATE	BY
A	INITIAL RELEASE	07/11/2019	MDD

DESCRIPTION:	Manhole D7286x12 Flat Top TU 30 E CASTING LAYOUT	REV:	A-1
PART NUMBER:	100001852	DRAWN BY:	V. Lund
CREATED:	7/10/2019	MODIFIED:	3/10/2021
		SHEET:	1 OF 2

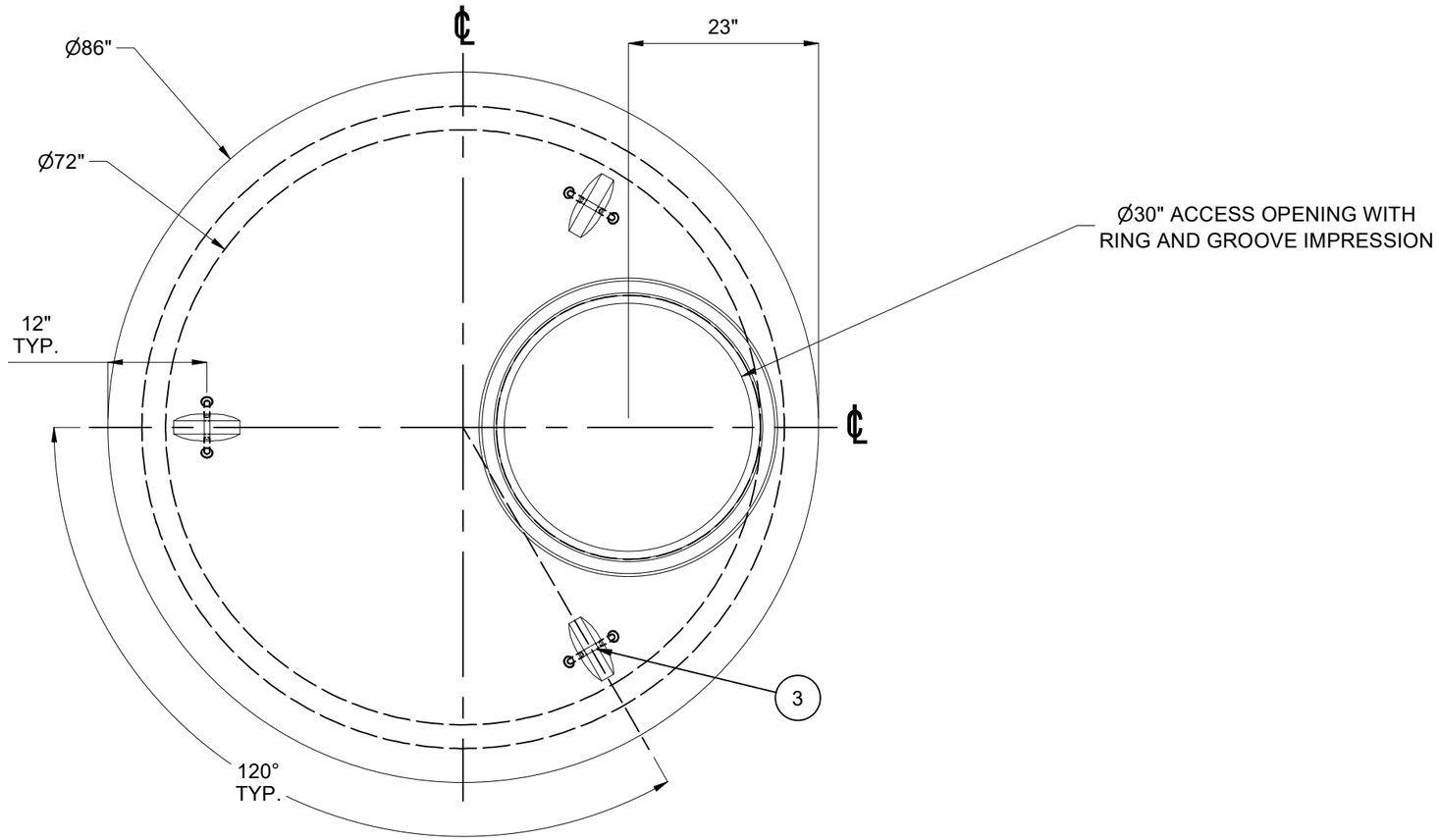

PLAN VIEW

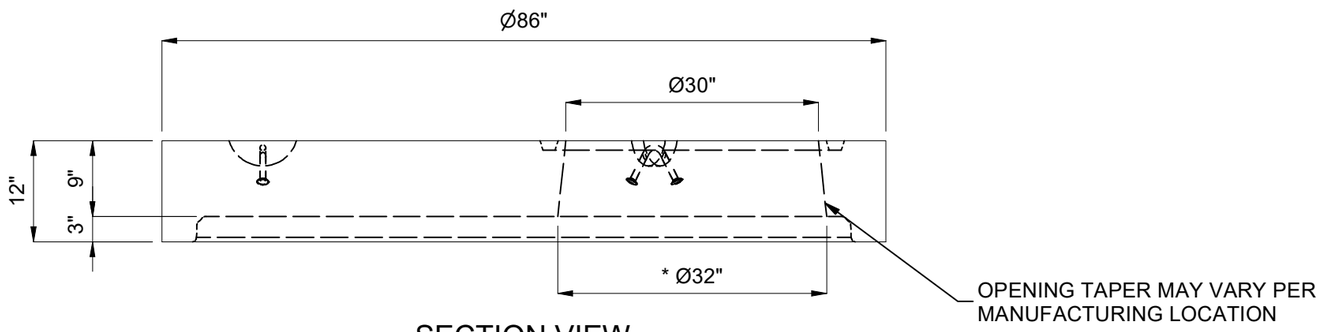

SECTION VIEW

BURY DEPTH:	0.0' - 5.0' to Top of Top Slab		
WATER LEVEL:	0.0'	WEIGHT:	4213.64 Lbs
DESIGN SPEC:	ASTM C890,ACI 318	LOADING SPEC:	A-16 (AASHTO HS20-44)
REINFORCEMENT TYPE:	Rebar	LIFTING TYPE:	A-Anchor

JENSEN PRECAST EST. 1968

WWW.JENSENPRECAST.COM

©2019 Jensen Precast- All rights reserved.
All materials appearing as Jensen Precast documents and the like are proprietary work product and are protected under U.S. copyright and other laws.
Unless in conjunction with business conducted with Jensen Precast, any use of Jensen Precast work product without express, written consent is prohibited, and recipient is prohibited from distributing any and all work product to non-approved third parties under penalty of civil action.

DESCRIPTION:	Manhole D7286x12 Flat Top TU 30 E CASTING DRAWING		
PART NUMBER:	100001852	DRAWN BY:	V. Lund
CREATED:	7/10/2019	MODIFIED:	3/10/2021

REV: A-1

SHEET: 2 OF 2

100001852.idw