NOTES
■ FOR COMPLETE DESIGN AND PRODUCT INFORMATION CONTACT JENSEN PRECAST.

BILL OF MATERIALS

ITEM	UNIT QTY	QTY	PART NUMBER	DESCRIPTION
1	8.338 ft^3	8.338 ft^3	100011425	CONCRETE MIX GENERIC 5000 PSI
2	1	1	100007527	REINFORCING MAT 100007527
3	1	3	100004880	ANCHOR UTILITY .671DIA 5.625-SLAB GALV P75 6UA671

ALTERNATE REINFORCING OPTIONS

PART NUMBER	DESCRIPTION
100042817	Alt for Reinf 100007527
200078224	Reinforcing MAT 200078224

100001670.idw

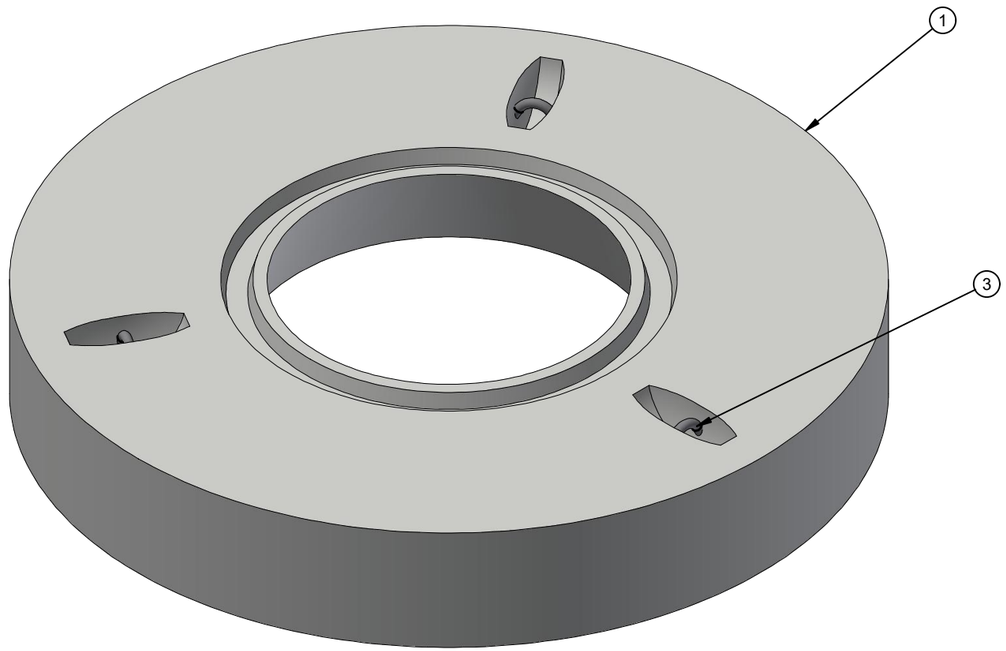

ISOMETRIC VIEW

LIFTING NOTES
■ THIS CONCRETE PRODUCT IS DESIGNED TO BE LIFTED AT 2500 PSI WITH 3 LIFT CONNECTIONS EQUALLY LOADED TO 3 LIFTING POINTS AT A MINIMUM 60° SLING ANGLE, MEASURED FROM HORIZONTAL.

BURY DEPTH:	0.0' - 5.0' to Top		
WATER LEVEL:	0.0'	WEIGHT:	1256.69 Lbs
DESIGN SPEC:	ASTM C890,ACI 318	LOADING SPEC:	A-16 (AASHTO HS20-44)
REINFORCEMENT TYPE:	Rebar	LIFTING TYPE:	Dogbone

JENSEN PRECAST EST. 1968

WWW.JENSENPRECAST.COM

©2019 Jensen Precast- All rights reserved.
All materials appearing as Jensen Precast documents and the like are proprietary work product and are protected under U.S. copyright and other laws.
Unless in conjunction with business conducted with Jensen Precast, any use of Jensen Precast work product without express, written consent is prohibited, and recipient is prohibited from distributing any and all work product to non-approved third parties under penalty of civil action.

REVISION HISTORY

REV	DESCRIPTION	DATE	BY
A	INITIAL RELEASE	06/12/2019	MDD
B	TAPERED OPENING INCREASED	08/03/2020	APS
3	ADDED ALT. REINFORCEMENT NOTE	7/20/2023	APS

DESCRIPTION:	Manhole D4858x9.25 Flat Top TU 24"C CASTING LAYOUT			REV: B-1
PART NUMBER:	100001670	DRAWN BY:	A.Sprung	SHEET: 1 OF 2
CREATED:	6/12/2019	MODIFIED:	7/25/2023	

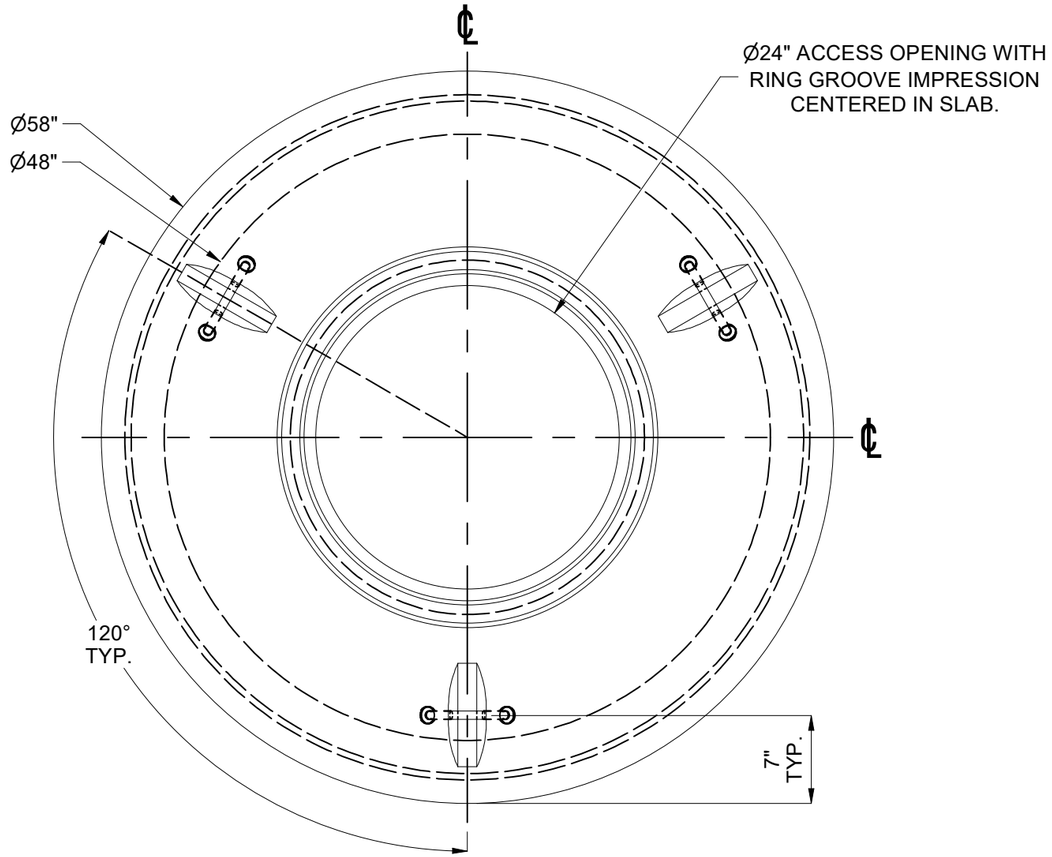

PLAN VIEW

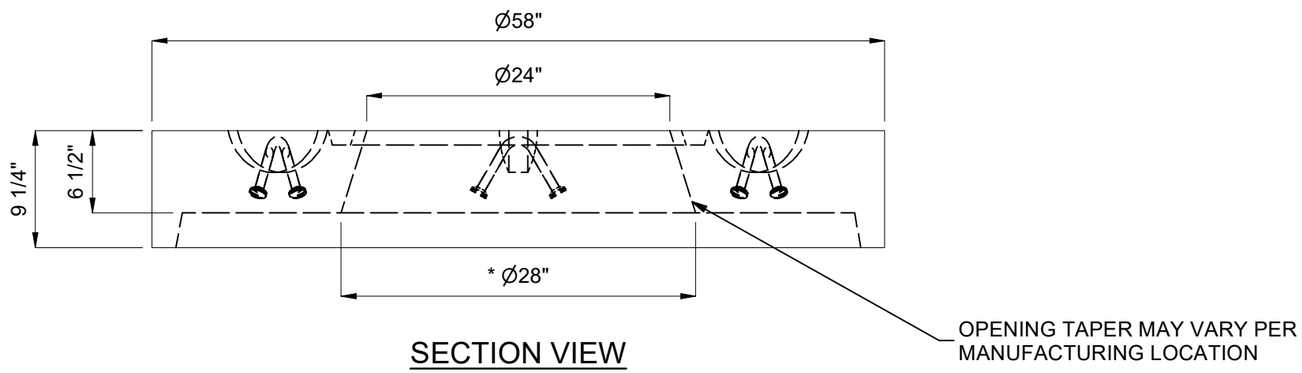

SECTION VIEW

BURY DEPTH:	0.0' - 5.0' to Top		
WATER LEVEL:	0.0'	WEIGHT:	1256.69 Lbs
DESIGN SPEC:	ASTM C890,ACI 318	LOADING SPEC:	A-16 (AASHTO HS20-44)
REINFORCEMENT TYPE:	Rebar	LIFTING TYPE:	Dogbone

JENSEN PRECAST EST. 1968

WWW.JENSENPRECAST.COM

©2019 Jensen Precast- All rights reserved.
All materials appearing as Jensen Precast documents and the like are proprietary work product and are protected under U.S. copyright and other laws.
Unless in conjunction with business conducted with Jensen Precast, any use of Jensen Precast work product without express, written consent is prohibited, and recipient is prohibited from distributing any and all work product to non-approved third parties under penalty of civil action.

DESCRIPTION:	Manhole D4858x9.25 Flat Top TU 24"C CASTING DRAWING		REV: B-1
PART NUMBER:	100001670	DRAWN BY:	A.Sprung
CREATED:	6/12/2019	MODIFIED:	7/25/2023
			SHEET: 2 OF 2

100001670.idw