NOTES
■ FOR COMPLETE DESIGN AND PRODUCT INFORMATION CONTACT JENSEN PRECAST.

BILL OF MATERIALS

ITEM	QTY	PART NUMBER	DESCRIPTION
1	10.983 ft^3	100011425	CONCRETE MIX GENERIC 5000 PSI
2	3	100002949	ANCHOR CABLE LOOP LIFT 1/4 x 8-1/4 CLPS2K MB - White Tag
3	1	100019098	REINFORCING MAT 100019098

ALTERNATE WWR REINFORCING OPTION	
PART NUMBER	DESCRIPTION
100042987	Alt for Reinf 100019098 – Manhole D4858x8 Flat Top GU 24"E Pima County AZ CRI

100001663.idw

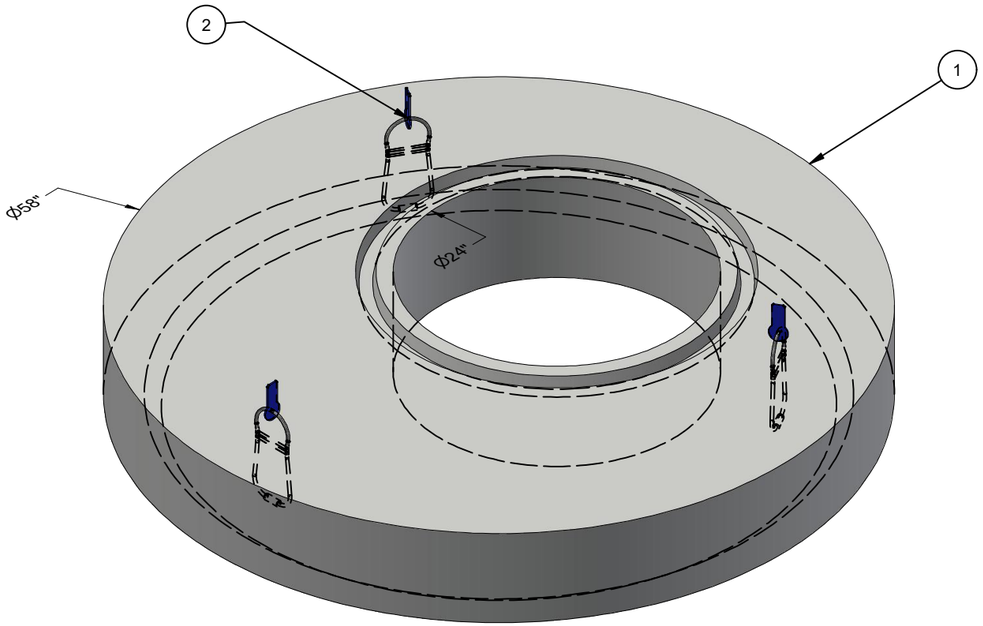

ISO VIEW

LIFTING NOTES
■ THIS CONCRETE PRODUCT IS DESIGNED TO BE LIFTED AT 2500PSI WITH 3 LIFT CONNECTIONS EQUALLY LOADED TO 3 LIFTING POINTS AT A MINIMUM 60° SLING ANGLE, MEASURED FROM HORIZONTAL.

BURY DEPTH:	0.0' - 10.0' to Top		
WATER LEVEL:	0.0'	APPROX. WEIGHT:	1651.95 Lbs
DESIGN SPEC:	ACI 318,ASTM C890	LOADING SPEC:	A-16 (AASHTO HS20-44)
REINFORCEMENT TYPE:	Rebar	LIFTING TYPE:	Cable

JENSEN PRECAST EST. 1968

WWW.JENSENPRECAST.COM

©2023 Jensen Precast- All rights reserved.
All materials appearing as Jensen Precast documents and the like are proprietary work product and are protected under U.S. copyright and other laws.
Unless in conjunction with business conducted with Jensen Precast, any use of Jensen Precast work product without express, written consent is prohibited, and recipient is prohibited from distributing any and all work product to non-approved third parties under penalty of civil action.

CHANGE HISTORY			
NO.	DESCRIPTION	DATE	BY
1	2307-55623	8-17-23	

DESCRIPTION:	Manhole D4858x8 Flat Top GU 24"E Pima County AZ CASTING LAYOUT		REV: A-1
PART NUMBER:	100001663	DRAWN BY: J. Warren	SHEET: 1 OF 2
CREATED:	6/1/2021	MODIFIED: 8/25/2023	

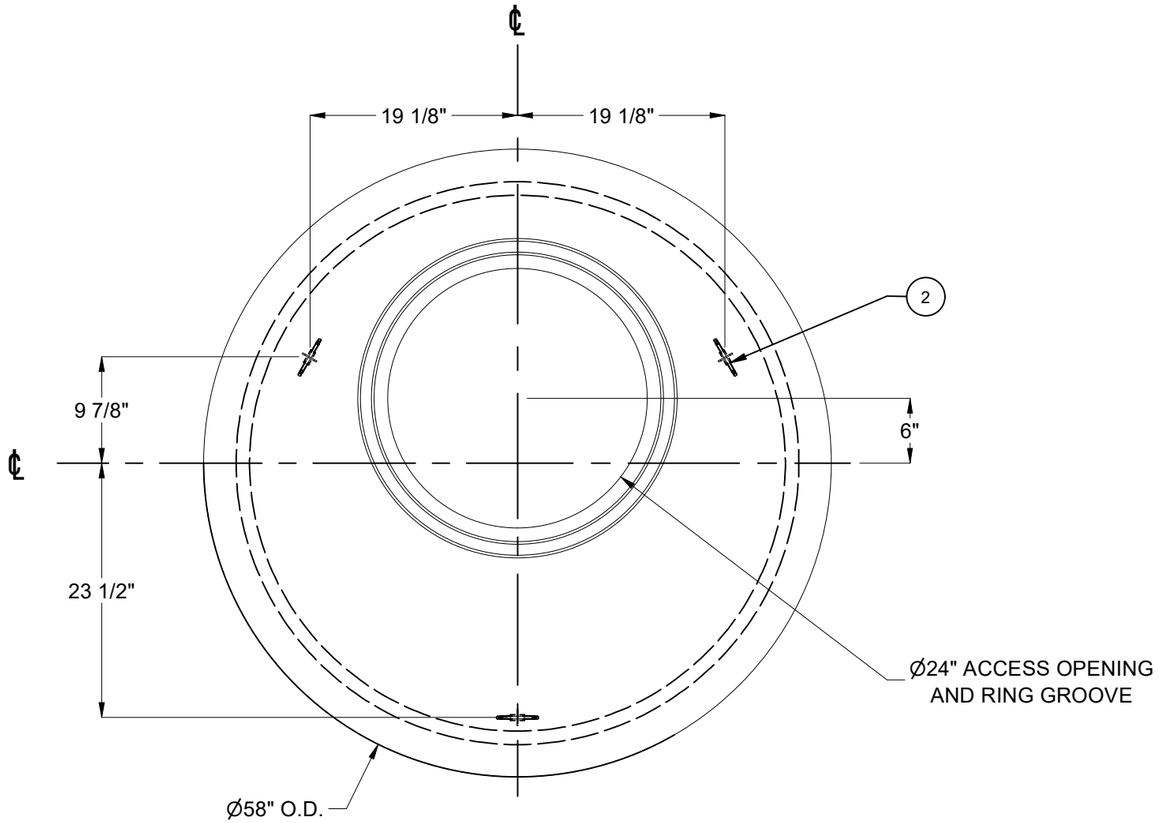

PLAN VIEW

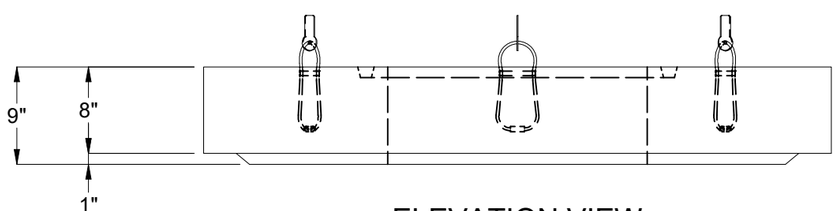

ELEVATION VIEW

BURY DEPTH:	0.0' - 10.0' to Top		
WATER LEVEL:	0.0'	APPROX. WEIGHT:	1651.95 Lbs
DESIGN SPEC:	ACI 318,ASTM C890	LOADING SPEC:	A-16 (AASHTO HS20-44)
REINFORCEMENT TYPE:	Rebar	LIFTING TYPE:	Cable

JENSEN PRECAST EST. 1968

WWW.JENSENPRECAST.COM

©2023 Jensen Precast- All rights reserved.
All materials appearing as Jensen Precast documents and the like are proprietary work product and are protected under U.S. copyright and other laws.
Unless in conjunction with business conducted with Jensen Precast, any use of Jensen Precast work product without express, written consent is prohibited, and recipient is prohibited from distributing any and all work product to non-approved third parties under penalty of civil action.

DESCRIPTION:	Manhole D4858x8 Flat Top GU 24"E Pima County AZ CASTING DRAWING		REV: A-1
PART NUMBER:	100001663	DRAWN BY:	J. Warren
CREATED:	6/1/2021	MODIFIED:	8/25/2023
			SHEET: 2 OF 2

100001663.idw