NOTES
■ FOR COMPLETE DESIGN AND PRODUCT INFORMATION CONTACT JENSEN PRECAST.

BILL OF MATERIALS

ITEM	QTY	PART NUMBER	DESCRIPTION
1	8.100 ft^3	100002728	CONCRETE MIX GENERIC 4000 PSI
2	2	100002854	INSERT MH RUNG PLASTIC SP SOCKET
3	1	100006796	REINF HOOP STEEL .25235DIA GA 29DIA
4	1	100003363	REINF HOOP STEEL .25235DIA GA ASTM A-1064 54.25DIA

100001644.idw

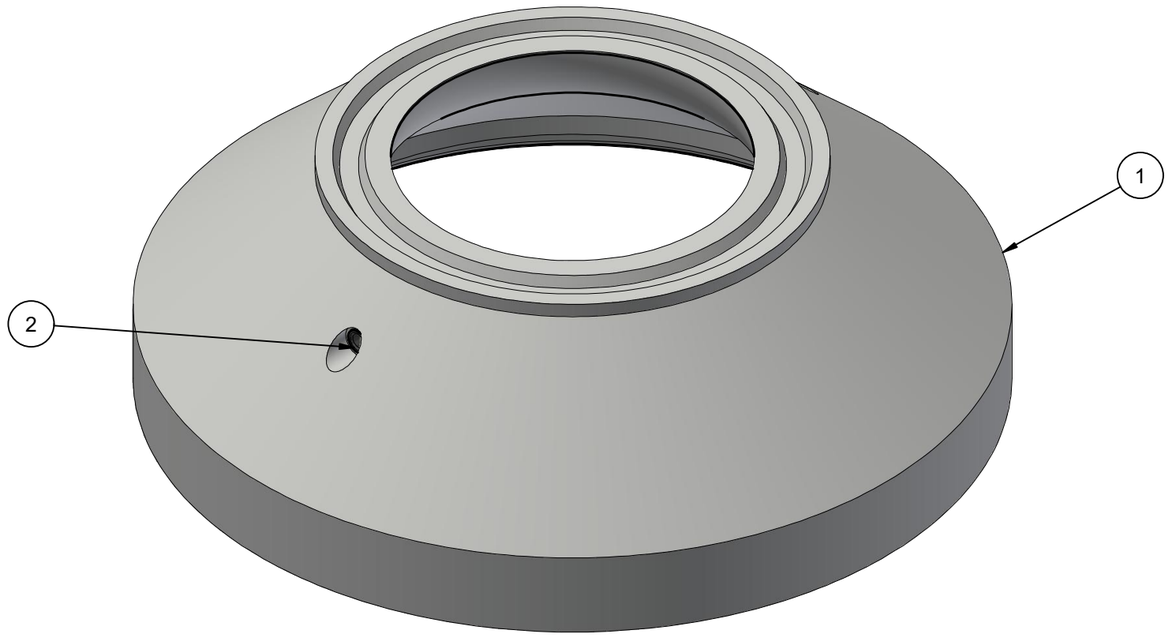

ISOMETRIC

LIFTING NOTES
■ THIS CONCRETE PRODUCT IS DESIGNED TO BE LIFTED AT 3000 PSI WITH 2 LIFT CONNECTIONS EQUALLY LOADED TO 2 LIFTING POINTS AT A MINIMUM 45°, MAXIMUM 90° SLING ANGLE, MEASURED FROM HORIZONTAL.

BURY DEPTH:	0.0' - 2.0' to Top		
WATER LEVEL:	0.0'	WEIGHT:	1208.29 Lbs
DESIGN SPEC:	ASTM C478	LOADING SPEC:	A-16 (AASHTO HS20-44)
REINFORCEMENT TYPE:	Plain Wire	LIFTING TYPE:	SP Socket

JENSEN PRECAST EST. 1968

WWW.JENSENPRECAST.COM

©2023 Jensen Precast- All rights reserved.
All materials appearing as Jensen Precast documents and the like are proprietary work product and are protected under U.S. copyright and other laws.
Unless in conjunction with business conducted with Jensen Precast, any use of Jensen Precast work product without express, written consent is prohibited, and recipient is prohibited from distributing any and all work product to non-approved third parties under penalty of civil action.

REVISION HISTORY

REV	DESCRIPTION	DATE	BY
A	INITIAL RELEASE	07/30/2020	

DESCRIPTION: Manhole Cone Concentric D4858 to D24x18IN TU

CASTING LAYOUT

REV: A-5

SHEET: 1 OF 2

PART NUMBER:	100001644	DRAWN BY:	A. Sprung
CREATED:	9/23/2020	MODIFIED:	3/17/2023

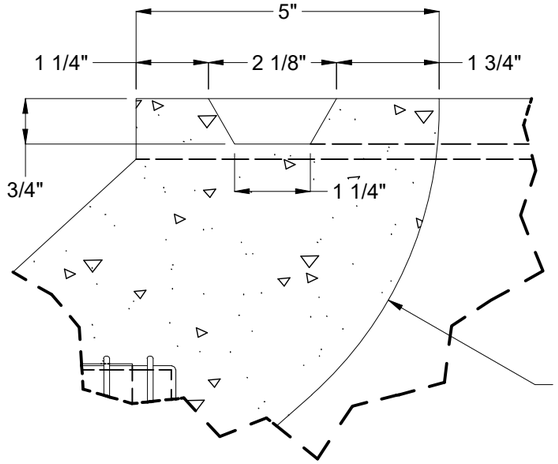

R6 3/8" FILLET
MAY VARY PER
MANUFACTURING LOCATION

DETAIL B

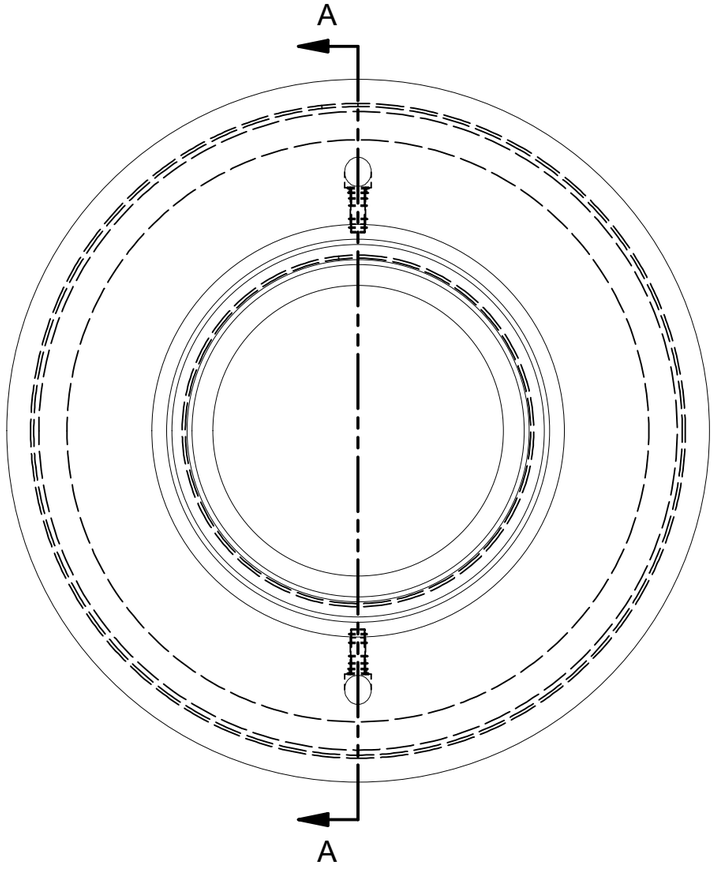

PLAN VIEW

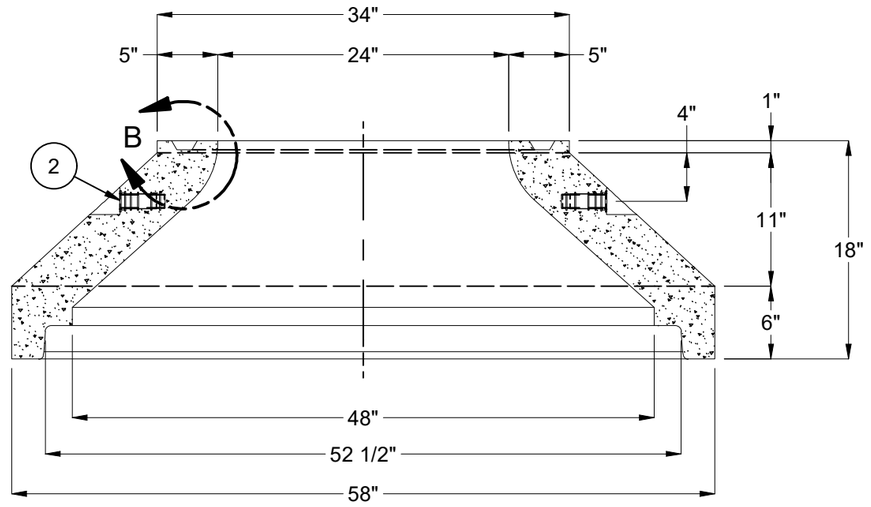

SECTION A-A

BURY DEPTH:	0.0' - 2.0' to Top		
WATER LEVEL:	0.0'	WEIGHT:	1208.29 Lbs
DESIGN SPEC:	ASTM C478	LOADING SPEC:	A-16 (AASHTO HS20-44)
REINFORCEMENT TYPE:	Plain Wire	LIFTING TYPE:	SP Socket

JENSEN PRECAST EST. 1968

WWW.JENSENPRECAST.COM

©2023 Jensen Precast- All rights reserved.
All materials appearing as Jensen Precast documents and the like are proprietary work product and are protected under U.S. copyright and other laws.
Unless in conjunction with business conducted with Jensen Precast, any use of Jensen Precast work product without express, written consent is prohibited, and recipient is prohibited from distributing any and all work product to non-approved third parties under penalty of civil action.

DESCRIPTION:	Manhole Cone Concentric D4858 to D24x18IN TU CASTING DRAWING		REV: A-5
PART NUMBER:	100001644	DRAWN BY:	A. Sprung
CREATED:	9/23/2020	MODIFIED:	3/17/2023
			SHEET: 2 OF 2

100001644.idw