DESIGN NOTES:

- CONCRETE SHALL HAVE A 28 DAY MINIMUM COMPRESSIVE STRENGTH OF 5000 PSI
- SOIL UNIT WEIGHT DRY - 110 lbs/cu.ft.
- EQUIVALENT LATERAL PRESSURE DRY - 40 lbs/cu.ft.
- SOIL UNIT WEIGHT WET - 120 lbs/cu.ft.
- EQUIVALENT LATERAL PRESSURE WET - 80 lbs/cu.ft.

PRODUCTION NOTES:

- THIS PRODUCT SHALL ONLY BE PRODUCED IN A JENSEN INFRASTRUCTURE FACILITY
- LIFTING INSERTS SHALL BE INSTALLED PER MANUFACTURER'S REQUIREMENTS
- APPLIED FINISH - NONE
- INTERNAL LINER/COATING - NONE
- EXTERNAL LINER/COATING - NONE

BILL OF MATERIALS

ITEM	QTY	PART NUMBER	DESCRIPTION
1	1	100019534	REINFORCING MAT 100019543
2	2	100004594	CONN COMP 8.50IN PIPE OD ALOK XCEL 285
3	2	100004872	ANCHOR UTILITY .444DIA 4-SLAB PLAIN P75 4UA444
4	23.463 ft^3	100011425	CONCRETE MIX GENERIC 5000 PSI
5	1	100007529	REINFORCING MAT 100007529

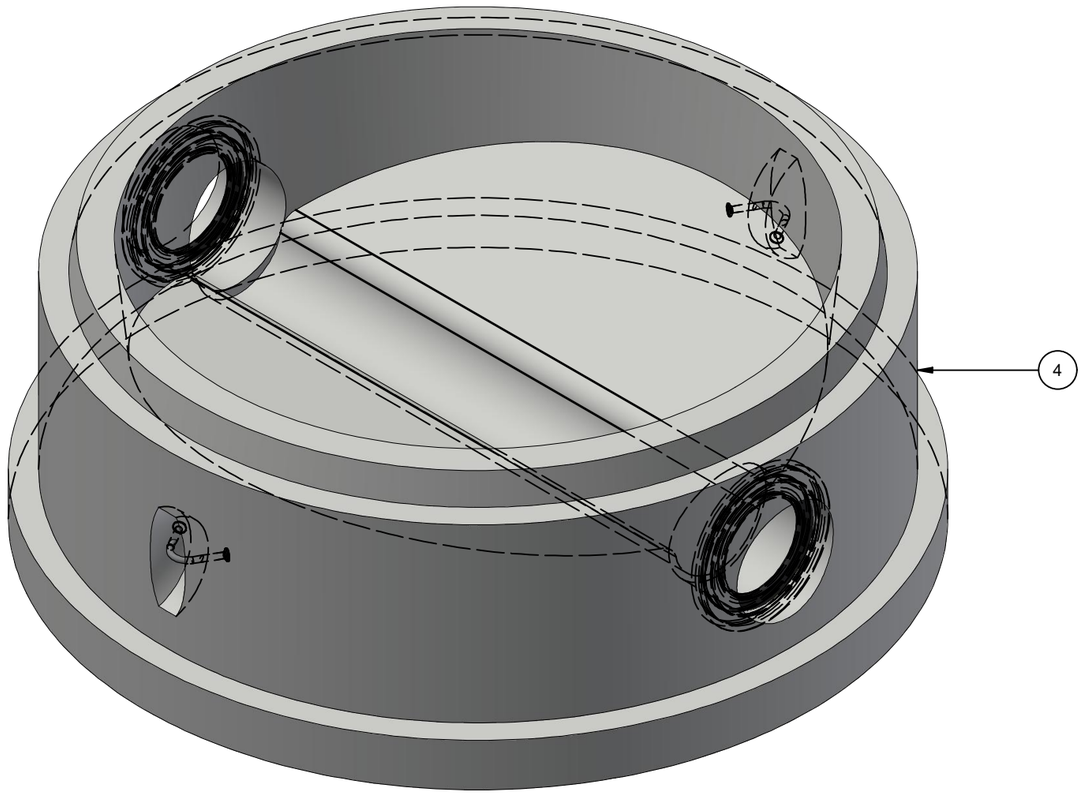

ISOMETRIC VIEW

100001564.idw

LIFTING NOTES
■ THIS CONCRETE PRODUCT IS DESIGNED TO BE LIFTED AT 2500 PSI WITH 2 LIFT CONNECTIONS EQUALLY LOADED TO 2 LIFTING POINTS AT A MINIMUM 60° SLING ANGLE, MEASURED FROM HORIZONTAL.
*All rigging shall be design by a qualified professional. Loading diagrams show illustrations of possible rigging setups to achieve the required sling angle and load leg equalization. Other valid rigging configurations are possible. A qualified professional must be consulted prior to lifting.

RIGGING DIAGRAM* **F**

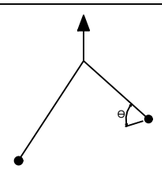

BURY DEPTH:	0.0' - 28.7' to Top		
WATER LEVEL:	0.0'	APPROX. WEIGHT:	3526.9 Lbs
DESIGN SPEC:	ASTM C478,ASTM C890	LOADING SPEC:	A-16 (AASHTO HS20-44)
REINFORCEMENT TYPE:	Rebar,WWR Deformed	LIFTING TYPE:	A-Anchor

Infrastructure
JENSEN
WWW.JENSENPRECAST.COM

©2025 Jensen Infrastructure - All rights reserved.
All materials appearing as Jensen Infrastructure documents and the like are proprietary work product and are protected under U.S. copyright and other laws.
Unless in conjunction with business conducted with Jensen Infrastructure , any use of Jensen Infrastructure work product without express, written consent is prohibited, and recipient is prohibited from distributing any and all work product to non-approved third parties under penalty of civil action. This product shall only be produced in a Jensen Infrastructure facility.

CHANGE HISTORY

NO.	DESCRIPTION	DATE	BY
A	ECR 34676, REQUEST 19642-14	08/01/2023	EDC
B			
C			

DESCRIPTION: Manhole D4858x16 Rnd. Bottom Section TU 2-WAY 180 8 NC CASTING LAYOUT			REV: A-1
PART NUMBER:	100001564	DRAWN BY: E CAMERON	SHEET: 1 OF 2
CREATED:	2/3/2021	MODIFIED: 4/8/2025	

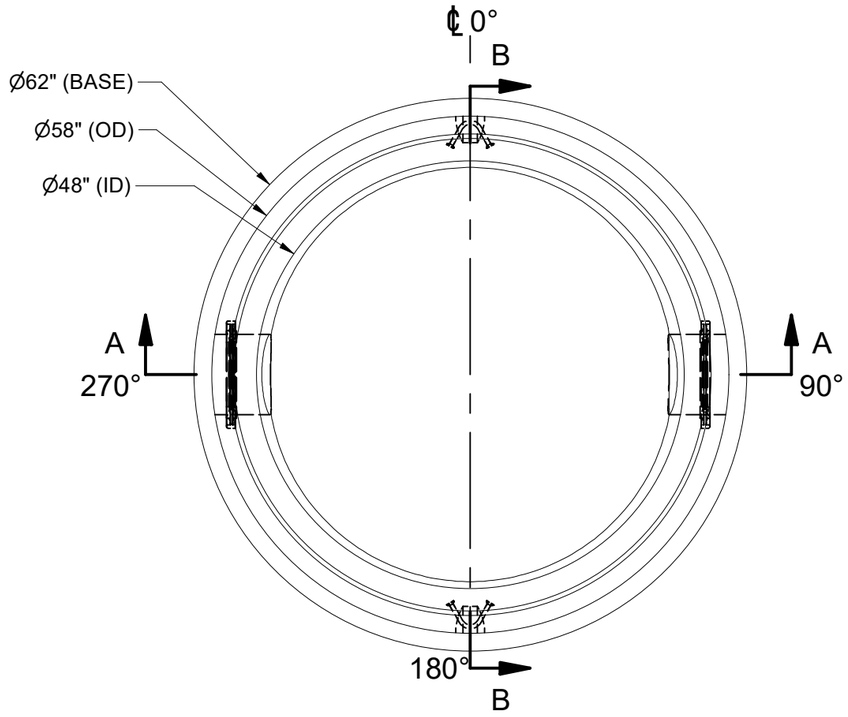

PLAN VIEW

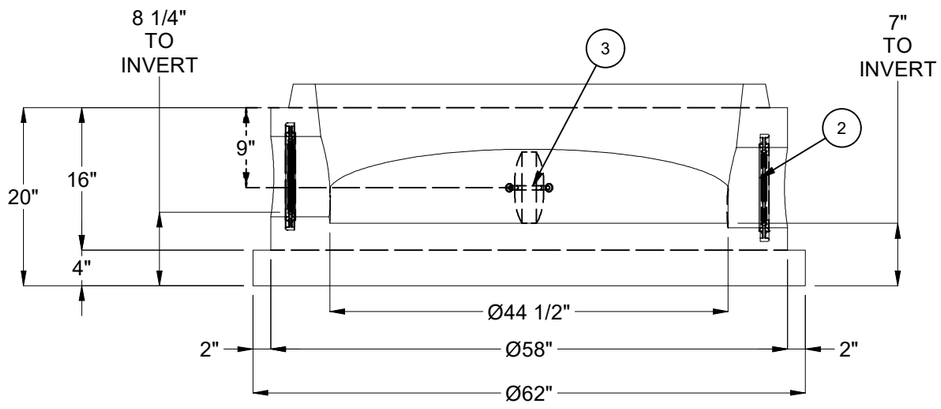

SECTION A-A

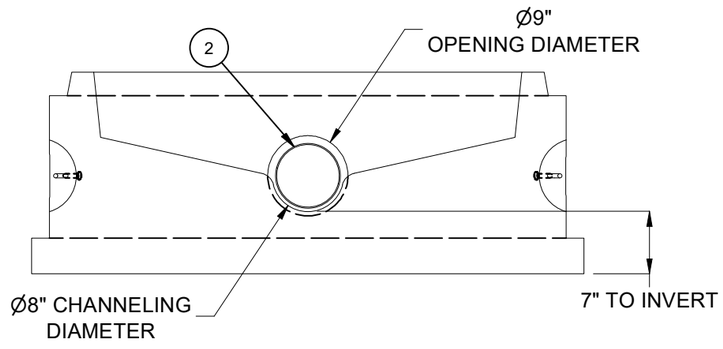

SECTION B-B

BURY DEPTH:	0.0' - 28.7' to Top		
WATER LEVEL:	0.0'	APPROX. WEIGHT:	3526.9 Lbs
DESIGN SPEC:	ASTM C478,ASTM C890	LOADING SPEC:	A-16 (AASHTO HS20-44)
REINFORCEMENT TYPE:	Rebar,WWR Deformed	LIFTING TYPE:	A-Anchor

Infrastructure
JENSEN
WWW.JENSENPRECAST.COM

©2025 Jensen Infrastructure - All rights reserved.
All materials appearing as Jensen Infrastructure documents and the like are proprietary work product and are protected under U.S. copyright and other laws.
Unless in conjunction with business conducted with Jensen Infrastructure , any use of Jensen Infrastructure work product without express, written consent is prohibited, and recipient is prohibited from distributing any and all work product to non-approved third parties under penalty of civil action. This product shall only be produced in a Jensen Infrastructure facility.

DESCRIPTION:	Manhole D4858x16 Rnd. Bottom Section TU 2-WAY 180 8 NC CASTING DRAWING		REV: A-1
PART NUMBER:	100001564	DRAWN BY:	E CAMERON
CREATED:	2/3/2021	MODIFIED:	4/8/2025
			SHEET: 2 OF 2

100001564.idw