DESIGN NOTES:

- CONCRETE SHALL HAVE A 28 DAY MINIMUM COMPRESSIVE STRENGTH OF

PRODUCTION NOTES:

- THIS PRODUCT SHALL ONLY BE PRODUCED IN A JENSEN PRECAST FACILITY
- LIFTING INSERTS SHALL BE INSTALLED PER MANUFACTURER'S REQUIREMENTS
- APPLIED FINISH - NONE
- INTERNAL LINER/COATING - NONE
- EXTERNAL LINER/COATING - NONE

BILL OF MATERIALS

ITEM	UNIT QTY	QTY	PART NUMBER	DESCRIPTION
1	6.300 ft^3	6.300 ft^3	100011425	CONCRETE MIX GENERIC 5000 PSI
2	1	2	100011246	REINF HOOP STEEL 47.5 DIA .25 WIRE DIA
3	1	3	100003349	INS THRD FRL THNSLB STRUT FX-16 3/4IN ZINC



ISOMETRIC VIEW

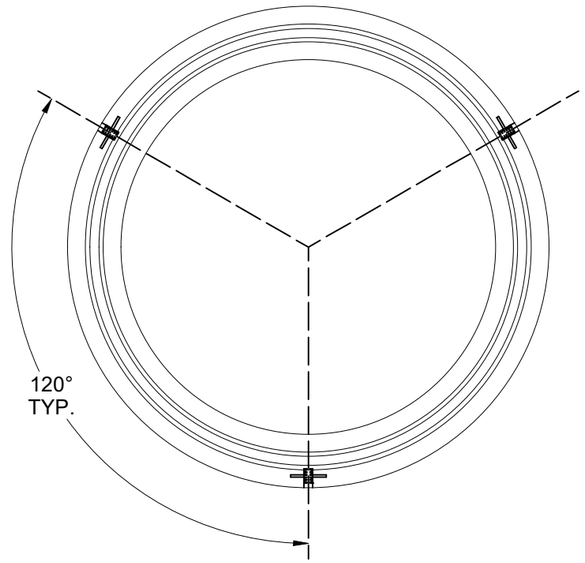

PLAN VIEW

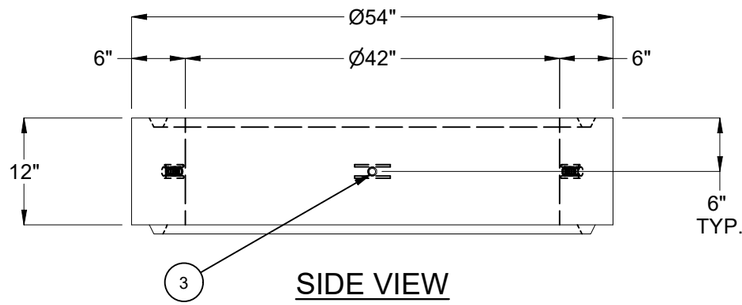

SIDE VIEW

RIGGING DIAGRAM*	A

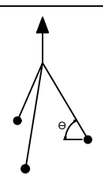

LIFTING NOTES

■ THIS CONCRETE PRODUCT IS DESIGNED TO BE LIFTED AT 2500 PSI WITH 3 LIFT CONNECTIONS EQUALLY LOADED TO 3 LIFTING POINTS AT A MINIMUM 60° SLING ANGLE, MEASURED FROM HORIZONTAL.

*All rigging shall be design by a qualified professional. Loading diagrams show illustrations of possible rigging setups to achieve the required sling angle and load leg equalization. Other valid rigging configurations are possible. A qualified professional must be consulted prior to lifting.

BURY DEPTH:	0.0' - 6.0' to Top		
WATER LEVEL:	0.0'	APPROX. WEIGHT:	944 Lbs
DESIGN SPEC:	ASTM C478	LOADING SPEC:	A-16 (AASHTO HS20-44)
REINFORCEMENT TYPE:	Plain Wire	LIFTING TYPE:	Insert

JENSEN PRECAST EST. 1968

WWW.JENSENPRECAST.COM

©2024 Jensen Precast- All rights reserved.
All materials appearing as Jensen Precast documents and the like are proprietary work product and are protected under U.S. copyright and other laws.
Unless in conjunction with business conducted with Jensen Precast, any use of Jensen Precast work product without express, written consent is prohibited, and recipient is prohibited from distributing any and all work product to non-approved third parties under penalty of civil action.
This product shall only be produced in a Jensen Precast facility.

CHANGE HISTORY

NO.	DESCRIPTION	DATE	BY
1	INITIAL RELEASE	7/3/2024	APS

DESCRIPTION:	Grade Ring D4254x12 CASTING LAYOUT		REV: A-1
PART NUMBER:	100001562	DRAWN BY:	D. Frazier
CREATED:	6/3/2016	MODIFIED:	7/3/2024
			SHEET: 1 OF 1

100001562.idw