DESIGN NOTES:

- CONCRETE SHALL HAVE A 28 DAY MINIMUM COMPRESSIVE STRENGTH OF 5000 PSI
- SOIL UNIT WEIGHT DRY - 110 lbs/cu.ft.
- EQUIVALENT LATERAL PRESSURE DRY - 40 lbs/cu.ft.
- SOIL UNIT WEIGHT WET - 120 lbs/cu.ft.
- EQUIVALENT LATERAL PRESSURE WET - 80 lbs/cu.ft.

PRODUCTION NOTES:

- THIS PRODUCT SHALL ONLY BE PRODUCED IN A JENSEN INFRASTRUCTURE FACILITY
- LIFTING INSERTS SHALL BE INSTALLED PER MANUFACTURER'S REQUIREMENTS
- APPLIED FINISH - NONE
- INTERNAL LINER/COATING - NONE
- EXTERNAL LINER/COATING - NONE

BILL OF MATERIALS

ITEM	UNIT QTY	QTY	PART NUMBER	DESCRIPTION
1	6.283 ft^3	6.283 ft^3	100011425	CONCRETE MIX GENERIC 5000 PSI
2	1	1	100011246	REINF HOOP STEEL 47.5 DIA .25 WIRE DIA
3	1	3	100003349	INS THRD FRL THNSLB STRUT FX-16 3/4IN ZINC

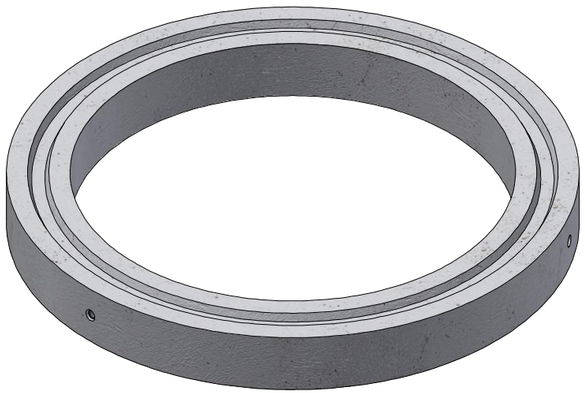

ISO VIEW

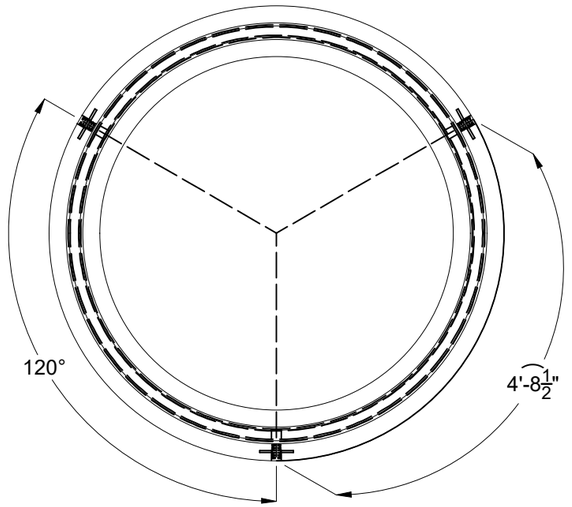

PLAN VIEW

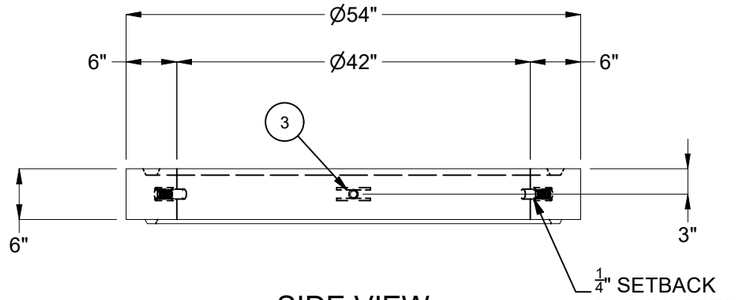

SIDE VIEW

100001561.idw

CHANGE HISTORY

NO.	DESCRIPTION	DATE	BY
A	INITIAL RELEASE	8/28/2023	J.R.
A-8-1	PROPERTIES UPDATED	1/15/2024	E.Fine
B	SWAPPED SP SOCKET FOR INSERTS	11/18/26	AB

BURY DEPTH:	0.0' - 6.0' to Top		
WATER LEVEL:	3.0'	APPROX. WEIGHT:	466.16 Lbs
DESIGN SPEC:	ASTM C478	LOADING SPEC:	A-16 (AASHTO HS20-44)
REINFORCEMENT TYPE:	Plain Wire	LIFTING TYPE:	SP Socket

Infrastructure
JENSEN
WWW.JENSENINFRASTRUCTURE.COM

©2026 Jensen Infrastructure - All rights reserved.
All materials appearing as Jensen Infrastructure documents and the like are proprietary work product and are protected under U.S. copyright and other laws.
Unless in conjunction with business conducted with Jensen Infrastructure , any use of Jensen Infrastructure work product without express, written consent is prohibited, and recipient is prohibited from distributing any and all work product to non-approved third parties under penalty of civil action.
This product shall only be produced in a Jensen Infrastructure facility.

DESCRIPTION:	Grade Ring D4254x6 CASTING LAYOUT		
PART NUMBER:	100001561	DRAWN BY:	E.Fine
CREATED:	8/10/2021	MODIFIED:	11/18/2026

REV: A-8-2

SHEET: 1 OF 1