NOTES
■ FOR COMPLETE DESIGN AND PRODUCT INFORMATION CONTACT JENSEN PRECAST.

BILL OF MATERIALS

ITEM	QTY	PART NUMBER	DESCRIPTION
1	5.485 ft^3	100002728	CONCRETE MIX GENERIC 4000 PSI
2	3	100002870	ANCHOR DOGBONE P52 2T X 6-3/4" GALV
3	1	200034775	REINFORCING MAT 200034775

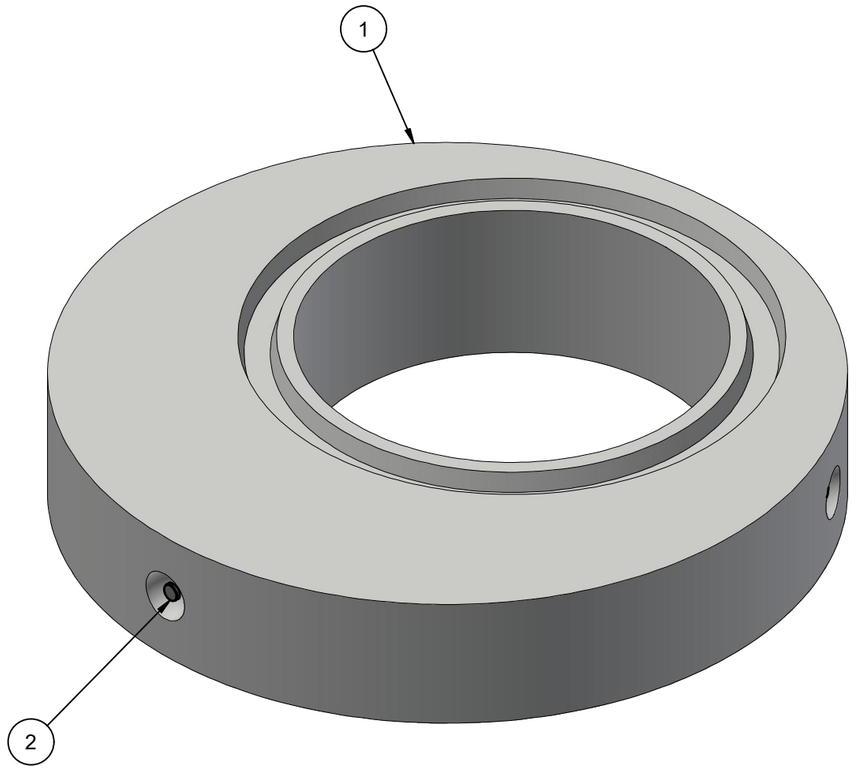

ISOMETRIC VIEW

LIFTING NOTES
■ THIS CONCRETE PRODUCT IS DESIGNED TO BE LIFTED AT 2,500 PSI WITH 3 LIFT CONNECTIONS EQUALLY LOADED TO 3 LIFTING POINTS AT A MINIMUM 45° SLING ANGLE, MEASURED FROM HORIZONTAL.
■ SLING LEG CAPACTY REQUIRED: 420 LBS.

CHANGE HISTORY			
NO.	DESCRIPTION	DATE	BY
1	DRAWING CREATED	11/25/2019	M VASQUEZ
2	REVISE BOTTOM JOINT - COMPLETE REINFORCNG	4/13/2020	EDC
3			

BURY DEPTH:	0.0' - 5.0' to Top		
WATER LEVEL:	Below Structure	WEIGHT:	826.24 Lbs
DESIGN SPEC:	ACI 318,ASTM C890	LOADING SPEC:	A-16 (AASHTO HS20-44)
REINFORCEMENT TYPE:	Rebar	LIFTING TYPE:	Dogbone

JENSEN PRECAST EST. 1968

WWW.JENSENPRECAST.COM

©2023 Jensen Precast- All rights reserved.
All materials appearing as Jensen Precast documents and the like are proprietary work product and are protected under U.S. copyright and other laws.
Unless in conjunction with business conducted with Jensen Precast, any use of Jensen Precast work product without express, written consent is prohibited, and recipient is prohibited from distributing any and all work product to non-approved third parties under penalty of civil action.

DESCRIPTION:	Manhole D3644x8 Flat Top 24"E CASTING LAYOUT		REV: B-3
PART NUMBER:	100001550	DRAWN BY:	E CAMERON
CREATED:	11/25/2019	MODIFIED:	4/26/2023
			SHEET: 1 OF 2

100001550.idw

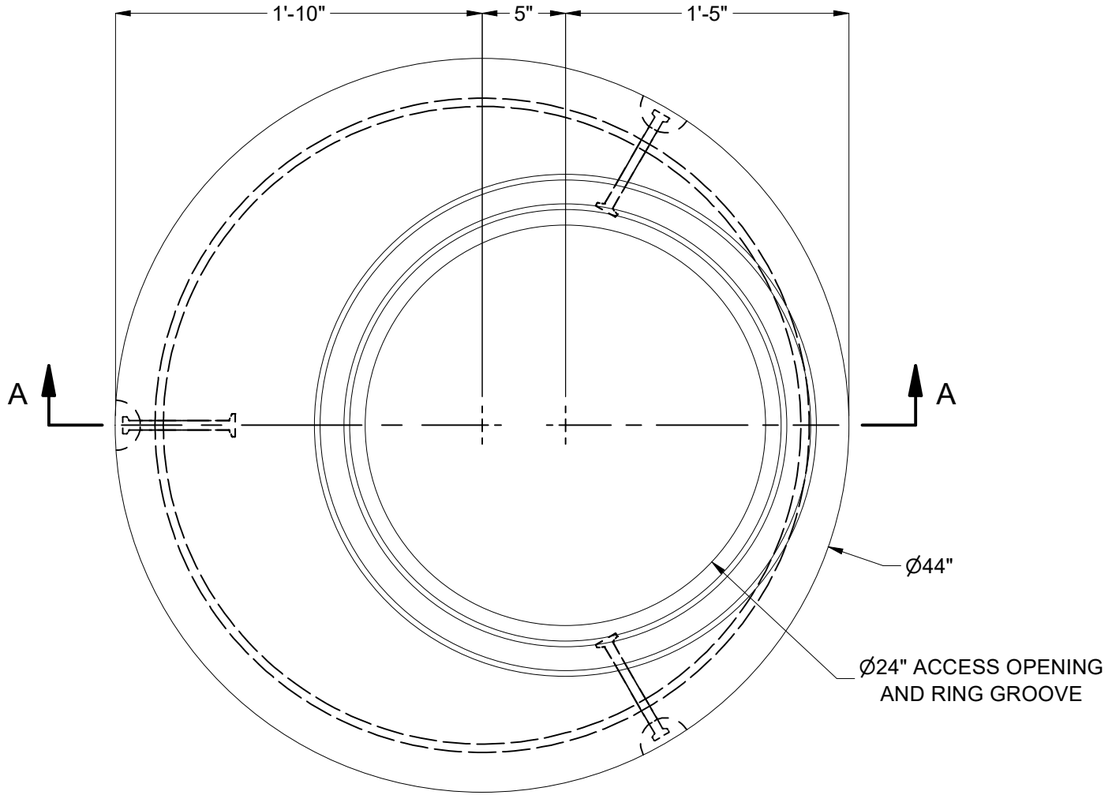

PLAN VIEW

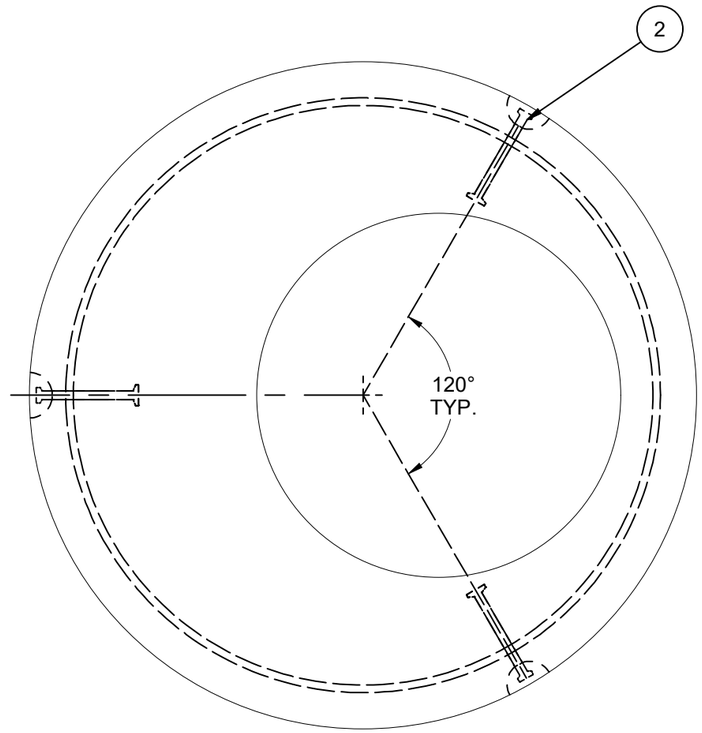

PLAN VIEW
(LIFTING DIMENSIONS ONLY)

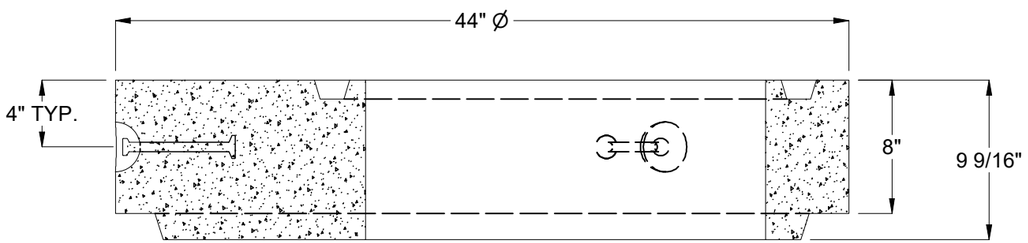

SECTION A-A

BURY DEPTH:	0.0' - 5.0' to Top		
WATER LEVEL:	Below Structure	WEIGHT:	826.24 Lbs
DESIGN SPEC:	ACI 318,ASTM C890	LOADING SPEC:	A-16 (AASHTO HS20-44)
REINFORCEMENT TYPE:	Rebar	LIFTING TYPE:	Dogbone

JENSEN PRECAST EST. 1968

WWW.JENSENPRECAST.COM

©2023 Jensen Precast- All rights reserved.
All materials appearing as Jensen Precast documents and the like are proprietary work product and are protected under U.S. copyright and other laws.
Unless in conjunction with business conducted with Jensen Precast, any use of Jensen Precast work product without express, written consent is prohibited, and recipient is prohibited from distributing any and all work product to non-approved third parties under penalty of civil action.

DESCRIPTION:	Manhole D3644x8 Flat Top 24"E CASTING DRAWING		REV: B-3
PART NUMBER:	100001550	DRAWN BY:	E CAMERON
CREATED:	11/25/2019	MODIFIED:	4/26/2023
			SHEET: 2 OF 2

100001550.idw