DESIGN NOTES:

- CONCRETE SHALL HAVE A 28 DAY MINIMUM COMPRESSIVE STRENGTH OF 4000 PSI
- SOIL UNIT WEIGHT DRY - 110 lbs/cu.ft.
- EQUIVALENT LATERAL PRESSURE DRY - 40 lbs/cu.ft.
- SOIL UNIT WEIGHT WET - 120 lbs/cu.ft.
- EQUIVALENT LATERAL PRESSURE WET - 80 lbs/cu.ft.

PRODUCTION NOTES:

- THIS PRODUCT SHALL ONLY BE PRODUCED IN A JENSEN PRECAST FACILITY
- LIFTING INSERTS SHALL BE INSTALLED PER MANUFACTURER'S REQUIREMENTS
- APPLIED FINISH - NONE
- INTERNAL LINER/COATING - NONE
- EXTERNAL LINER/COATING - NONE

BILL OF MATERIALS

ITEM	QTY	PART NUMBER	DESCRIPTION
1	6.800 ft^3	100002728	CONCRETE MIX GENERIC 4000 PSI
2	1	100006796	REINF HOOP STEEL .25235DIA GA 29DIA
3	1	100011237	REINF HOOP STEEL 38 DIA .375 WIRE DIA
4	2	100002854	INSERT MH RUNG PLASTIC SP SOCKET

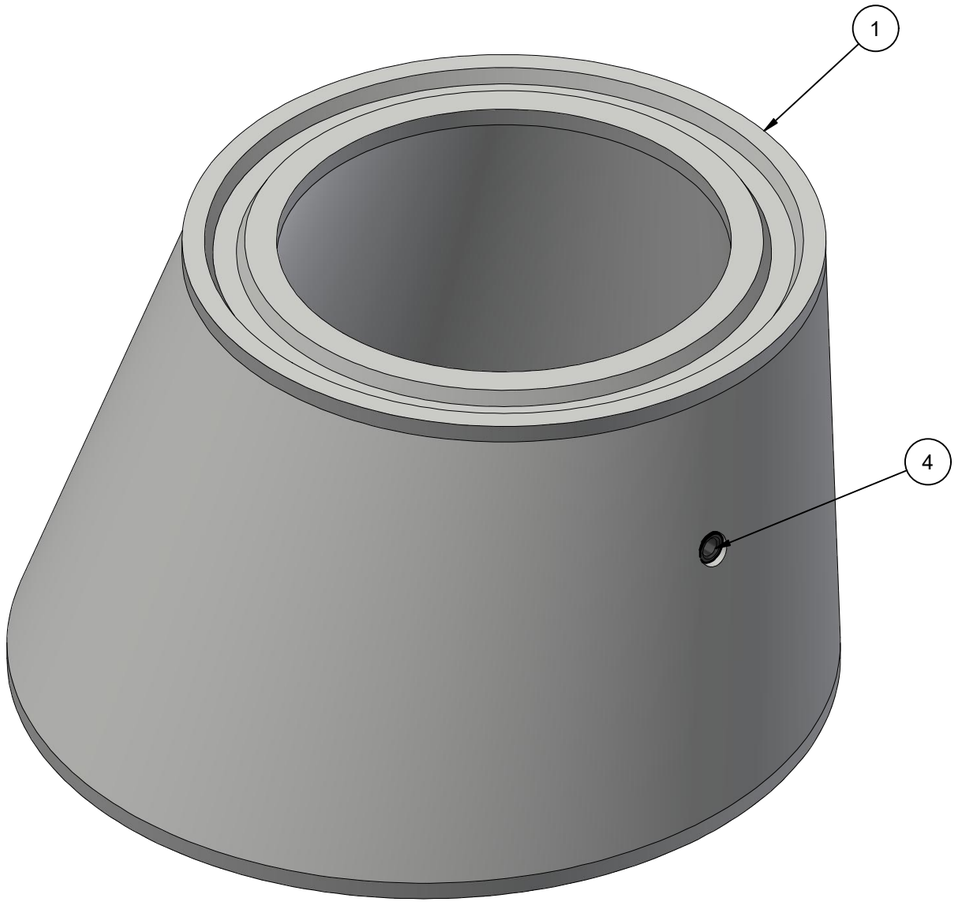

ISOMETRIC

100001549.idw

LIFTING NOTES
■ THIS CONCRETE PRODUCT IS DESIGNED TO BE LIFTED AT 2500 PSI WITH 2 LIFT CONNECTIONS EQUALLY LOADED TO 2 LIFTING POINTS AT A MINIMUM 45° SLING ANGLE, MEASURED FROM HORIZONTAL.
*All rigging shall be design by a qualified professional. Loading diagrams show illustrations of possible rigging setups to achieve the required sling angle and load leg equalization. Other valid rigging configurations are possible. A qualified professional must be consulted prior to lifting.

RIGGING DIAGRAM* **F**

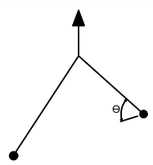

BURY DEPTH:	0.0' - 2.0' to Top		
WATER LEVEL:	0.0'	APPROX. WEIGHT:	1026.98 Lbs
DESIGN SPEC:	ASTM C478	LOADING SPEC:	A-16 (AASHTO HS20-44)
REINFORCEMENT TYPE:	Plain Wire	LIFTING TYPE:	SP Socket

JENSEN PRECAST EST. 1968

WWW.JENSENPRECAST.COM

©2024 Jensen Precast- All rights reserved.
All materials appearing as Jensen Precast documents and the like are proprietary work product and are protected under U.S. copyright and other laws.
Unless in conjunction with business conducted with Jensen Precast, any use of Jensen Precast work product without express, written consent is prohibited, and recipient is prohibited from distributing any and all work product to non-approved third parties under penalty of civil action.

REVISION HISTORY

REV	DESCRIPTION	DATE	BY
A	INITIAL RELEASE	12/2/2024	J.R.

DESCRIPTION: Manhole Cone Eccentric D3644 to D24x24IN GU

CASTING LAYOUT

REV: A-4

PART NUMBER:	100001549	DRAWN BY:	J. Ramirez
CREATED:	8/27/2020	MODIFIED:	12/4/2024

SHEET: 1 OF 2

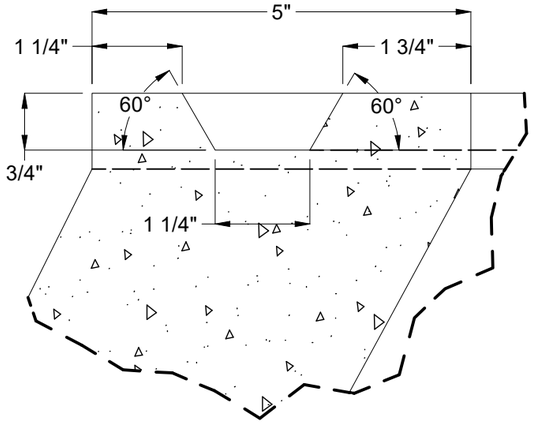

DETAIL B

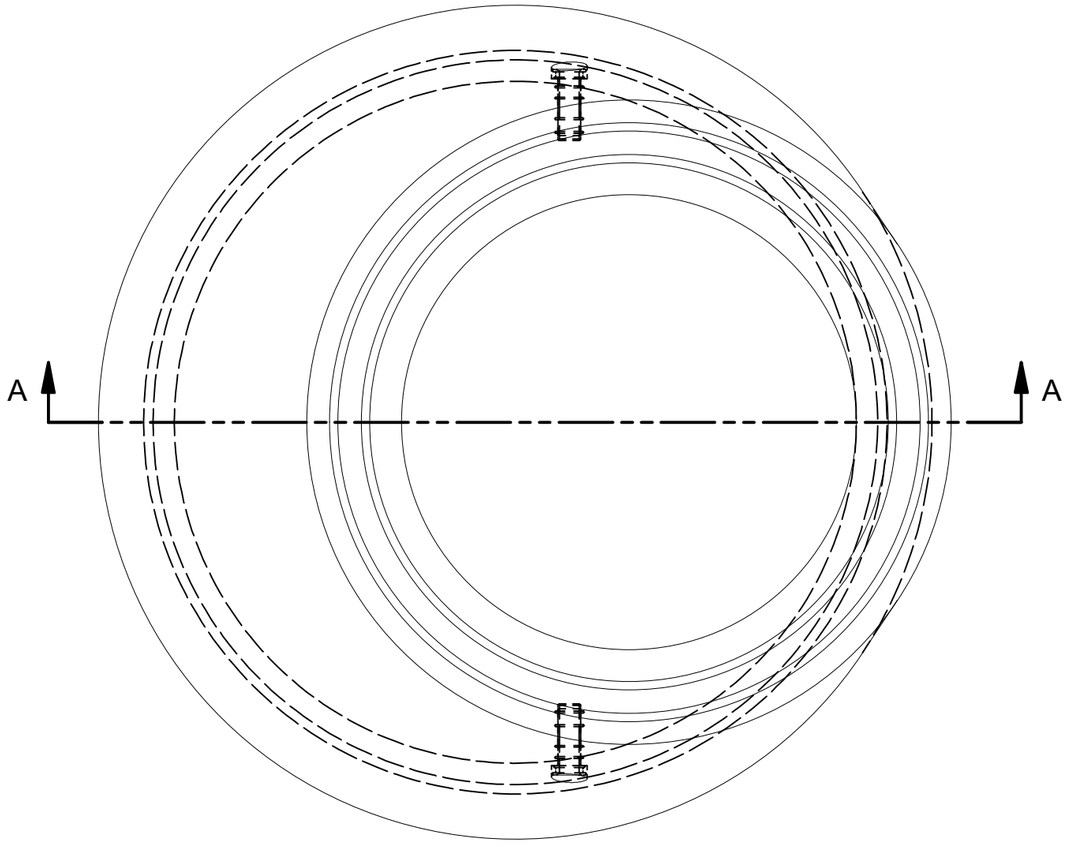

PLAN VIEW

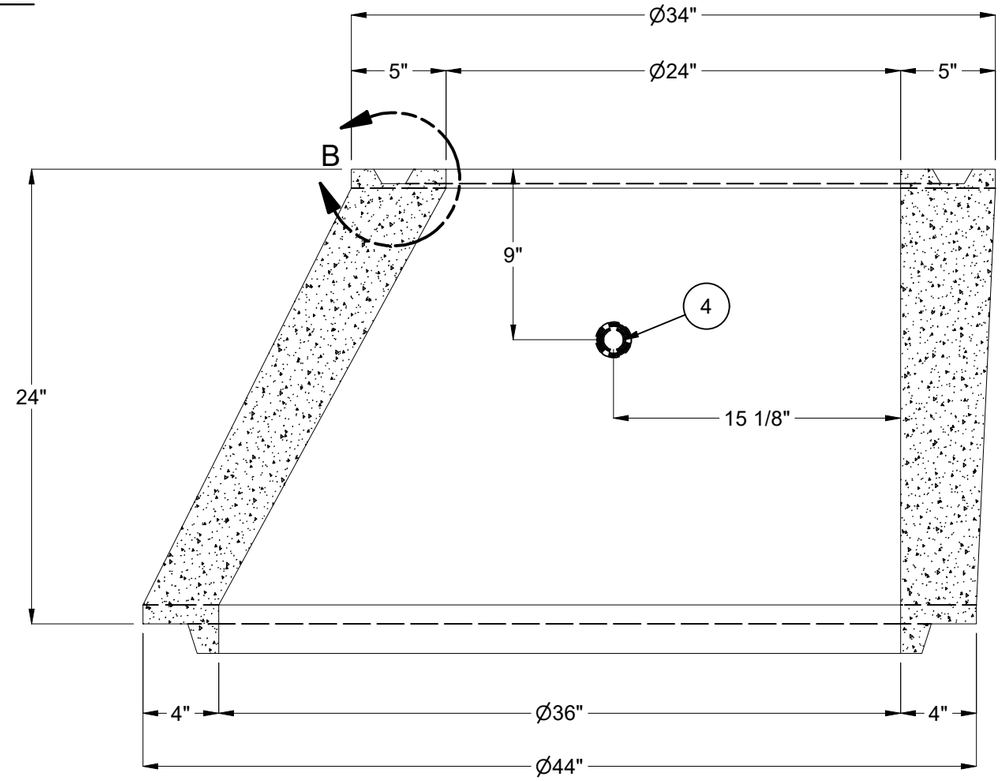

SECTION A-A

BURY DEPTH:	0.0' - 2.0' to Top		
WATER LEVEL:	0.0'	APPROX. WEIGHT:	1026.98 Lbs
DESIGN SPEC:	ASTM C478	LOADING SPEC:	A-16 (AASHTO HS20-44)
REINFORCEMENT TYPE:	Plain Wire	LIFTING TYPE:	SP Socket

JENSEN PRECAST EST. 1968

WWW.JENSENPRECAST.COM

©2024 Jensen Precast- All rights reserved.
All materials appearing as Jensen Precast documents and the like are proprietary work product and are protected under U.S. copyright and other laws.
Unless in conjunction with business conducted with Jensen Precast, any use of Jensen Precast work product without express, written consent is prohibited, and recipient is prohibited from distributing any and all work product to non-approved third parties under penalty of civil action.

DESCRIPTION:	Manhole Cone Eccentric D3644 to D24x24IN GU CASTING DRAWING		REV: A-4
PART NUMBER:	100001549	DRAWN BY:	J. Ramirez
CREATED:	8/27/2020	MODIFIED:	12/4/2024
			SHEET: 2 OF 2

100001549.idw