DESIGN NOTES

- FOR COMPLETE DESIGN AND PRODUCT INFORMATION CONTACT JENSEN PRECAST.

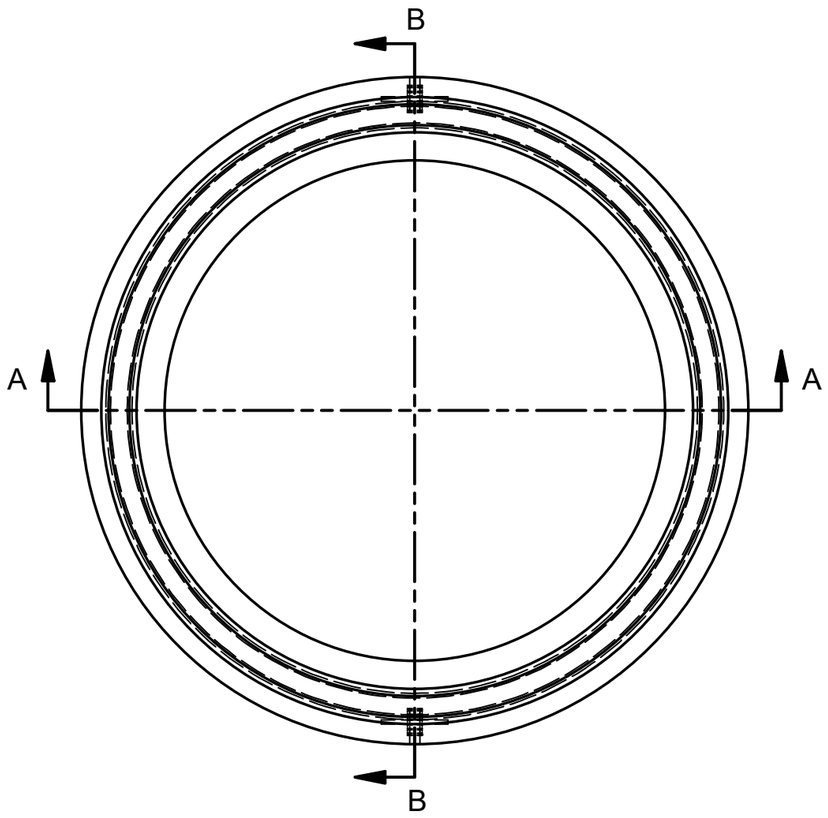

PLAN VIEW

BILL OF MATERIALS

ITEM	QTY	PART NUMBER	DESCRIPTION
1	3.777 ft^3	100005976	CONCRETE 4500 PSI GENERIC MIX
2	2	100002390	REINF HOOP STEEL .25235DIA GA 35DIA
3	2	100003348	INS THRD FRL THNSLB STRUT FX-16 5/8IN ZINC

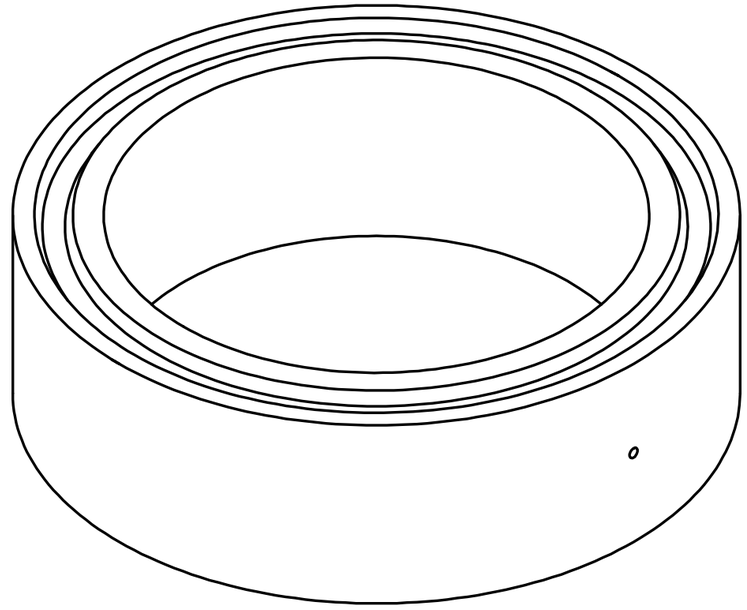

ISO VIEW

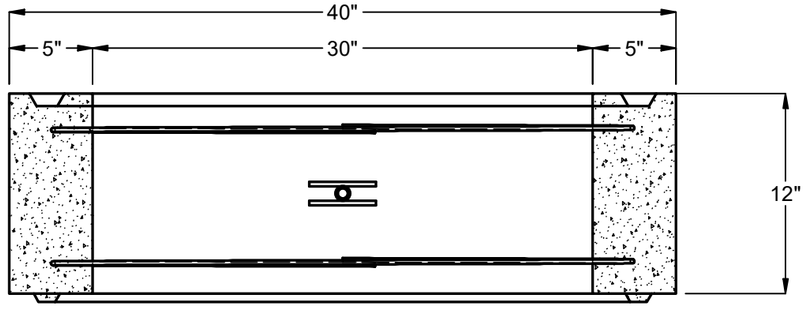

SECTION A-A

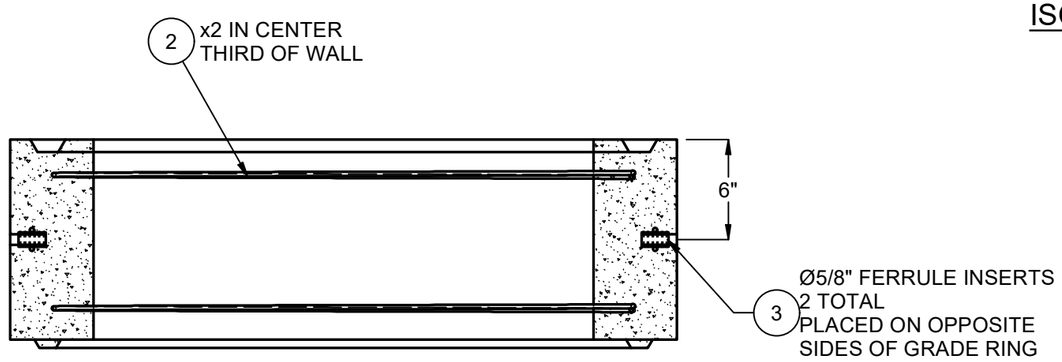

SECTION B-B

LIFTING NOTES

- THIS CONCRETE PRODUCT IS DESIGNED TO BE LIFTED AT 2000 PSI WITH 2 LIFT CONNECTIONS EQUALLY LOADED TO 2 LIFTING POINTS AT A MINIMUM 90° SLING ANGLE, MEASURED FROM HORIZONTAL.

BURY DEPTH:	0.0' - 50.0' to Top		
WATER LEVEL:	0.0'	WEIGHT:	571.2 Lbs
DESIGN SPEC:	ASTM C478,AASHTO M199	LOADING SPEC:	A-16 (AASHTO HS20-44)
REINFORCEMENT TYPE:	Plain Wire	LIFTING TYPE:	None

JENSEN PRECAST EST. 1968

WWW.JENSENPRECAST.COM

©2018 Jensen Precast- All rights reserved.
All materials appearing as Jensen Precast documents and the like are proprietary work product and are protected under U.S. copyright and other laws.
Unless in conjunction with business conducted with Jensen Precast, any use of Jensen Precast work product without express, written consent is prohibited, and recipient is prohibited from distributing any and all work product to non-approved third parties under penalty of civil action.

REVISION HISTORY

REV	DESCRIPTION	DATE	BY
1	DRAWING CREATED	6/29/2022	DCH

DESCRIPTION:	Grade Ring D3040x12 CASTING LAYOUT		REV: B-3
PART NUMBER:	100001534	DRAWN BY:	D. Hughes
CREATED:	6/29/2022	MODIFIED:	2/3/2026
			SHEET: 1 OF 1

100001534.idw