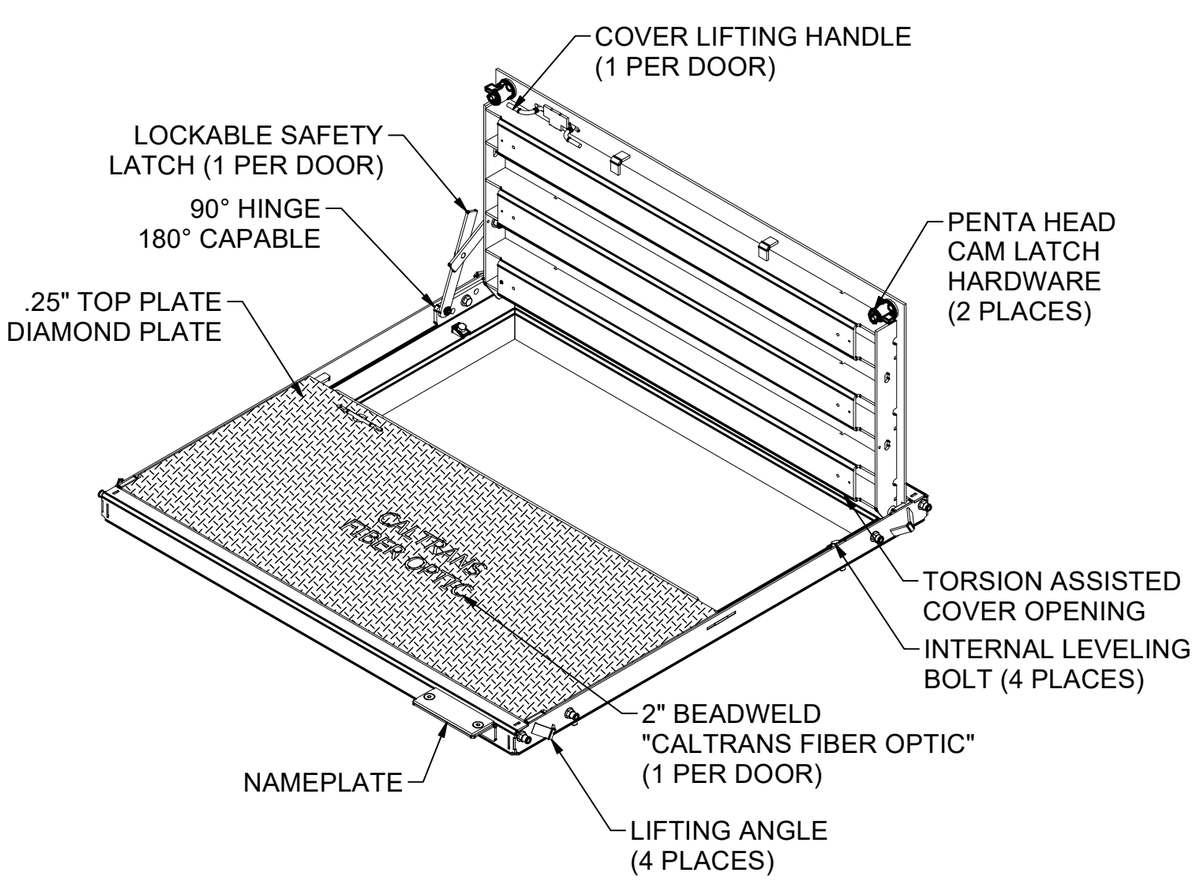

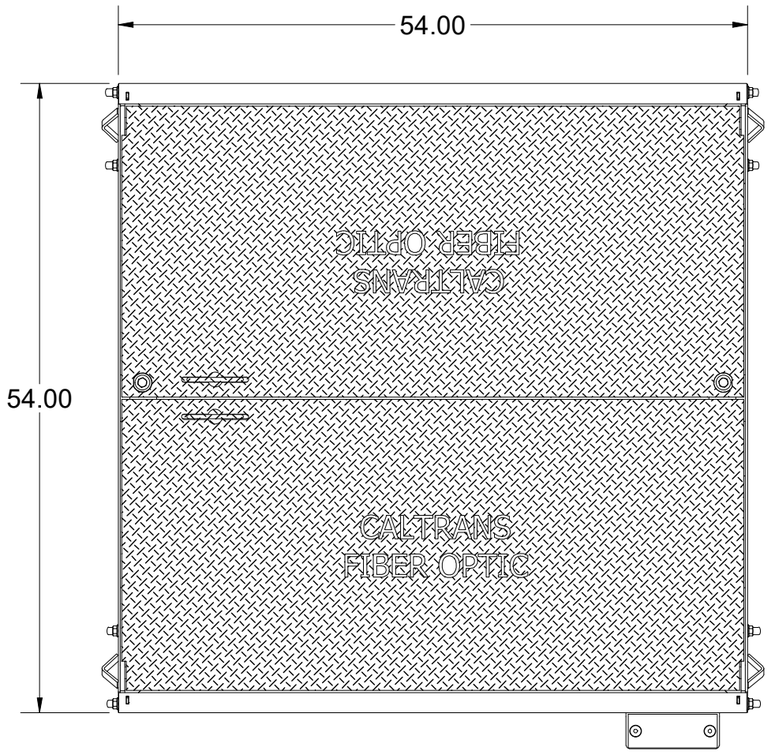

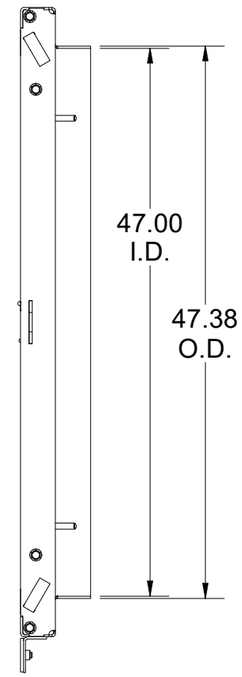

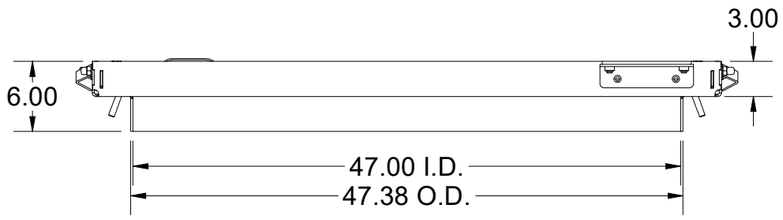

200067075.idw

LOADING CRITERIA: ASTM C1802 Load Level 04

16,000 lb load on 10" x 20" footprint, without impact restricted to parking spaces and areas within close proximity of roadways.

SURFACE:	Diamond Plate	FINISH:	Galvanized
WEIGHT:	565.16 lbs	MARKING:	CALTRANS FIBER OPTIC

Infrastructure
JENSEN
527 Dunn Circle, Sparks, NV 89431
775-352-2716 FAX: 755-358-8127
JENSENMETALTECH.COM

©2026 Jensen Infrastructure - All rights reserved.
All materials appearing as Jensen Infrastructure documents and the like are proprietary work product and are protected under U.S. copyright and other laws. Unless in conjunction with business conducted with Jensen Infrastructure , any use of Jensen Infrastructure work product without express, written consent is prohibited, and recipient is prohibited from distributing any and all work product to non-approved third parties under penalty of civil action.
This product shall only be produced in a Jensen Infrastructure facility.

DESCRIPTION:	CAS2-4848-AH4-DP-G-CL-SAC-OH06-BW-CALTRANS FIBER OPTIC 48x48 Standard Cover Assembly (ASTM C1802 Load Level 04, Steel, Hinged, Handle (1 Per Door), Diamond Plate, Galvanized) 06	REV:	B-1
PART NUMBER:	200067075	DRAWN BY:	A.BILLETT
CREATED:	7/28/2022	MODIFIED:	3/25/2026
		SHEET:	1

BILL OF MATERIALS

ITEM	UNIT QTY	QTY	PART NUMBER	DESCRIPTION	PART NAME
1	1	1	100001502	CAS2-4848-AH4-DP-G-CL-OH06	100001502

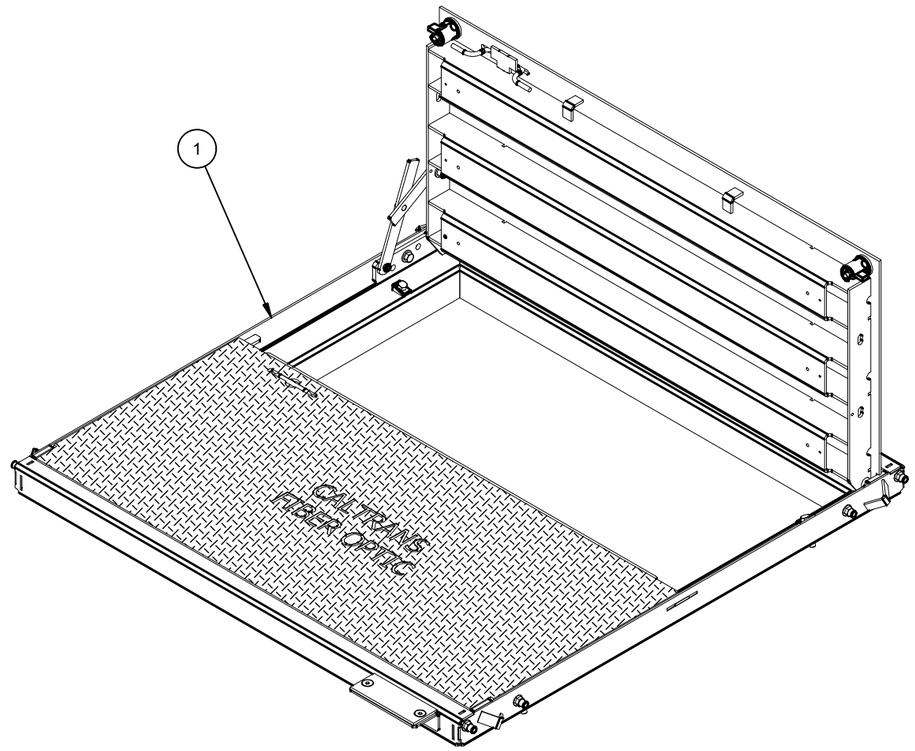

200067075.idw

REVISION HISTORY		
DESCRIPTION	DATE	REVISED BY
CLEANED UP PRINT PACK	3/25/2026	C. HEYWOOD

MATERIAL FINISH: Galvanized

MATERIAL SURFACE: Diamond Plate

Infrastructure
JENSEN
527 Dunn Circle, Sparks, NV 89431
775-352-2716 FAX: 755-358-8127
JENSENMETALTECH.COM

©2026 Jensen Infrastructure - All rights reserved.
All materials appearing as Jensen Infrastructure documents and the like are proprietary work product and are protected under U.S. copyright and other laws. Unless in conjunction with business conducted with Jensen Infrastructure , any use of Jensen Infrastructure work product without express, written consent is prohibited, and recipient is prohibited from distributing any and all work product to non-approved third parties under penalty of civil action.
This product shall only be produced in a Jensen Infrastructure facility.

PART NUMBER & DESCRIPTION: 200067075
CAS2-4848-AH4-DP-G-CL-SAC-OH06-BW-CALTRANS FIBER OPTIC

REV: B-1

WEIGHT: 565.16 Lbs

DRAWN BY: A.BILLETT

CREATED: 7/28/2022

MODIFIED: 3/25/2026

SHEET: 2

BILL OF MATERIALS

ITEM	ITEM QTY	QTY	PART NUMBER	DESCRIPTION	PART NAME
1	8	8	100026256	LOW-STRENGTH STEEL FLANGE NUT, 1/2" - 13 THREAD SIZE	100026256
2		1	200035871	DAS2-T-4848-H4-DP-G-CL	200035871
3		1	200035866	DAS2-B-4848-H4-DP-G	200035866
4		1	200035873	FAS-4848-AH-G-OH06	200035873
5	9	9	100011418	WASHER FLAT 1/2 NARROW ZINC	100011418
6	2	2	100011407	Hex Bolt 1/2-13 UNC ZINC - PT - 2.25"	100011407
7	8	8	100007939	CAP VINYL .467 X 1/2	100007939
8	1	1	100007924	LANYARD 3/64 W/PIN COATED SS	100007924
9	2	2	100007918	COTTER PIN 0.094DIA X 1-1/4	100007918
10	2	2	100007915	SPRING COMPRESSION 055 X 5/8 X 7/8 LONG	100007915
11	1	1	100007882	Rivet Blind Grip .1875" Large Domed Head Range-0.376-0.5" Steel	100007882
12	2	2	100007876	Bolt Shoulder Socket Head - 3/8-16 UNC - SD-0.5" - SL-0.3125" - Grade 5 - Zinc	100007876
13	4	4	100007873	BOLT SHCS 3/8-16 X 1-1/4 PLATED	100007873
14	4	4	100007869	BOLT SOCKET CAP - 1/2-13 UNC - 1.75 - 316SS	100007869
15	4	4	100007859	RIVET NUT 3/8-16 FLAT KNURLED	100007859
16	2	2	100007857	NUT FINGER 1/2-13 BRASS	100007857
17	2	2	100007733	Bolt Socket Flat Countersunk Head - 1/2-13 UNC - Grade 5 - Zinc - FT - 1"	100007733
18	2	2	100007729	HEX NUT SLOTTED CASTLE HEAD 1/2-13 SS	100007729
19	2	2	100007727	TORSION HEX ROD 1/2 X 36 RAW	100007727
20	2	2	100007671	SPRING MOUNT ASSY .500	100007671
21	2	2	100007660	Hinge Assembly, Right, 1/2, Steel	100007660
22	2	2	100007659	Hinge Assembly, Left, 1/2, Steel	100007659
23	2	2	100007492	HEX NUT NYLOCK - 1/2-13 UNC - GR5 - ZINC	100007492
24	1	1	100007391	NAME PLATE STEEL - BLANK	100007391
25	4	4	100005059	BOLT HEX 1/2-13 UNC 2.5 ZINC	100005059
26	5	5	100003823	Hex Bolt 1/2-13 UNC ZINC - PT - 1.5"	100003823
27	2	2	100007933	SAFETY LATCH ASSY FOR UNI AND 90 D HINGE	100007933
44	2	2	200100755	Frame Cam Latch Catch Plate - 1/4" A36, Dual Door, 0.8125" Overhang	200100755

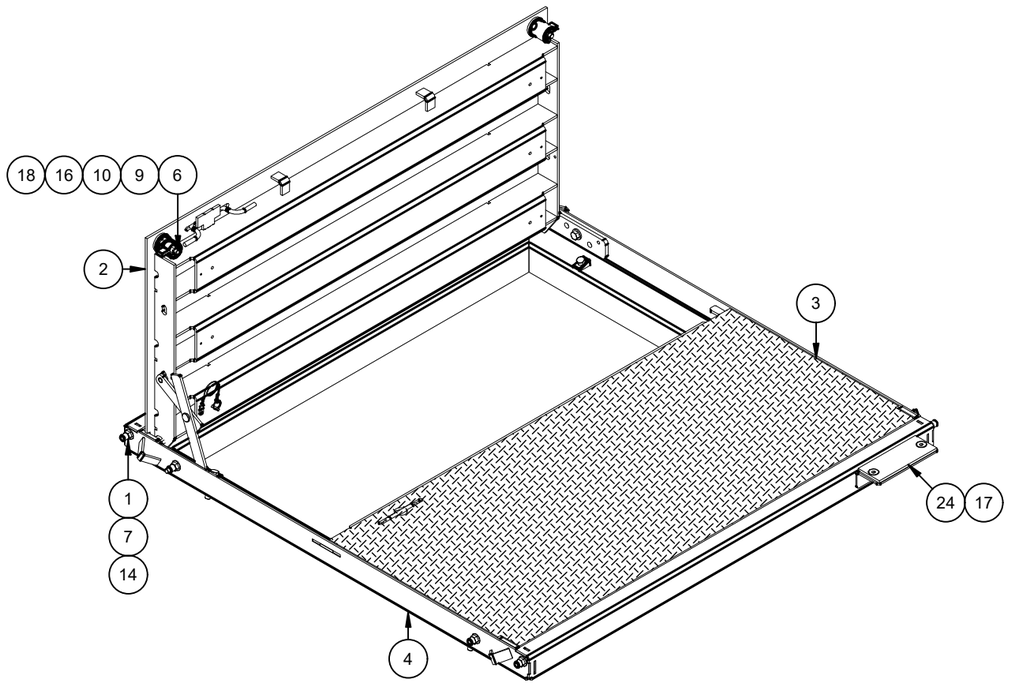

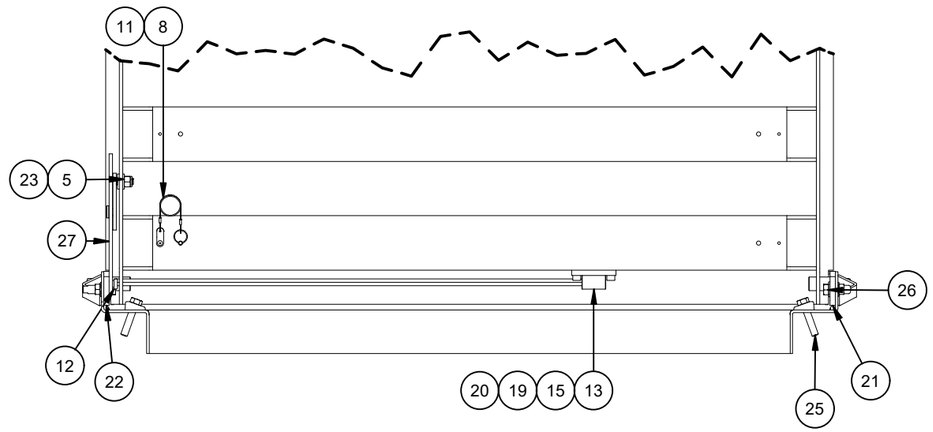

20006707S.idw

MATERIAL FINISH: Galvanized	Infrastructure JENSEN 527 Dunn Circle, Sparks, NV 89431 775-352-2716 FAX: 755-358-8127 *JENSENMETALTECH.COM*	©2026 Jensen Infrastructure - All rights reserved. All materials appearing as Jensen Infrastructure documents and the like are proprietary work product and are protected under U.S. copyright and other laws. Unless in conjunction with business conducted with Jensen Infrastructure , any use of Jensen Infrastructure work product without express, written consent is prohibited, and recipient is prohibited from distributing any and all work product to non-approved third parties under penalty of civil action. This product shall only be produced in a Jensen Infrastructure facility.	PART NUMBER & DESCRIPTION: 100001502 CAS2-4848-AH4-DP-G-CL-OH06
MATERIAL SURFACE: Diamond Plate			WEIGHT: 565.78 Lbs CREATED: 7/28/2022 DRAWN BY: A.BILLETT MODIFIED: 3/25/2026

REV: B-1

SHEET: 3

BURN LIST - BOM

PART NAME	ITEM QTY	QTY	DESCRIPTION	STOCK NUMBER	MATERIAL	MASS	SHEET
200035867	4	15.035 lbmass	Door Component Steel Side Bar	100007735	STL ASTM A36 SM-HRPO RAW .250	3.759 lbmass	08
200035868	6	200.460 lbmass	Door Component Steel Channel	100007735	STL ASTM A36 SM-HRPO RAW .250	33.410 lbmass	09
200035869	1	103.818 lbmass	Door Component Steel Plate, Bottom	100007736	SHT STL CQ DP RAW .25 - 36 KSI YIELD	103.818 lbmass	10
200035872	1	103.487 lbmass	Door Component Steel Plate, Top	100007736	SHT STL CQ DP RAW .25 - 36 KSI YIELD	103.487 lbmass	11
200035874	2	57.090 lbmass	Frame Component Steel Frame End, Adjustable	100007734	STL ASTM A36 SM-HRPO 60X120 RAW .1875	28.545 lbmass	12
200035875	2	48.315 lbmass	Frame Component Steel Frame Side, Adjustable	100007734	STL ASTM A36 SM-HRPO 60X120 RAW .1875	24.158 lbmass	13
200087252	1	6.293 lbmass	Door Component Steel Lap Bar 48in, 2.5" Stiffener Offset	100007735	STL ASTM A36 SM-HRPO RAW .250	6.293 lbmass	14

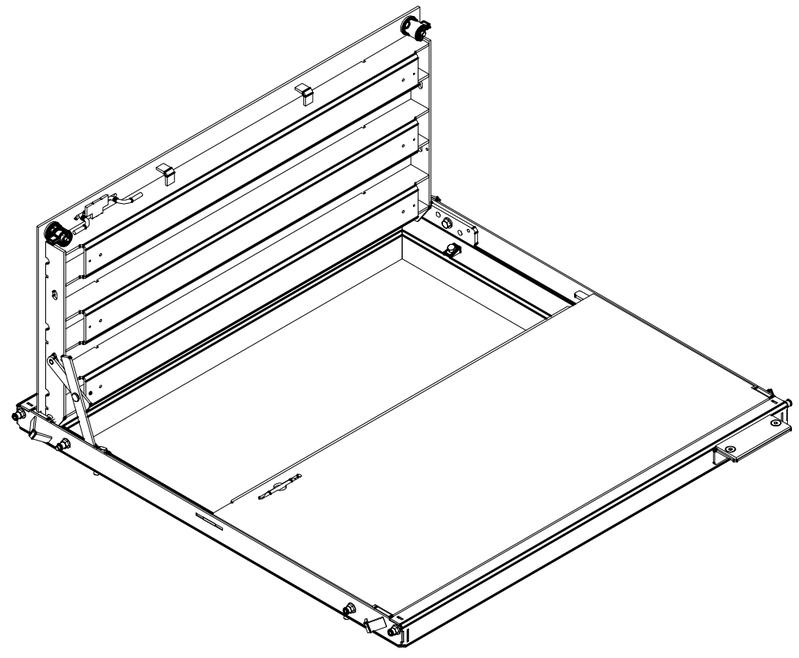

200067075.idw

MATERIAL FINISH: Galvanized

MATERIAL SURFACE: Diamond Plate

Infrastructure JENSEN
527 Dunn Circle, Sparks, NV 89431
775-352-2716 FAX: 755-358-8127
JENSENMETALTECH.COM

©2026 Jensen Infrastructure - All rights reserved.
All materials appearing as Jensen Infrastructure documents and the like are proprietary work product and are protected under U.S. copyright and other laws. Unless in conjunction with business conducted with Jensen Infrastructure , any use of Jensen Infrastructure work product without express, written consent is prohibited, and recipient is prohibited from distributing any and all work product to non-approved third parties under penalty of civil action.
This product shall only be produced in a Jensen Infrastructure facility.

PART NUMBER & DESCRIPTION: 100001502 CAS2-4848-AH4-DP-G-CL-OH06

REV: B-1

WEIGHT: 565.78 Lbs

DRAWN BY: A.BILLETT

CREATED: 7/28/2022

MODIFIED: 3/25/2026

SHEET: 4

BILL OF MATERIALS

ITEM	ITEM QTY	QTY	PART NUMBER	DESCRIPTION	PART NAME
1	1	103.818 lbmass	100007736	Door Component Steel Plate, Bottom	200035869
2	3	100.230 lbmass	100007735	Door Component Steel Channel	200035868
3	2	7.518 lbmass	100007735	Door Component Steel Side Bar	200035867
4	1	6.293 lbmass	100007735	Door Component Steel Lap Bar 48in, 2.5" Stiffener Offset	200087252
5	1	1	100007644	LEAF PULL HANDLE A36 3/8IN DIAMETER	100007644
6	2	2	100007647	LIFTING BRACKET STEEL LEAF	100007647

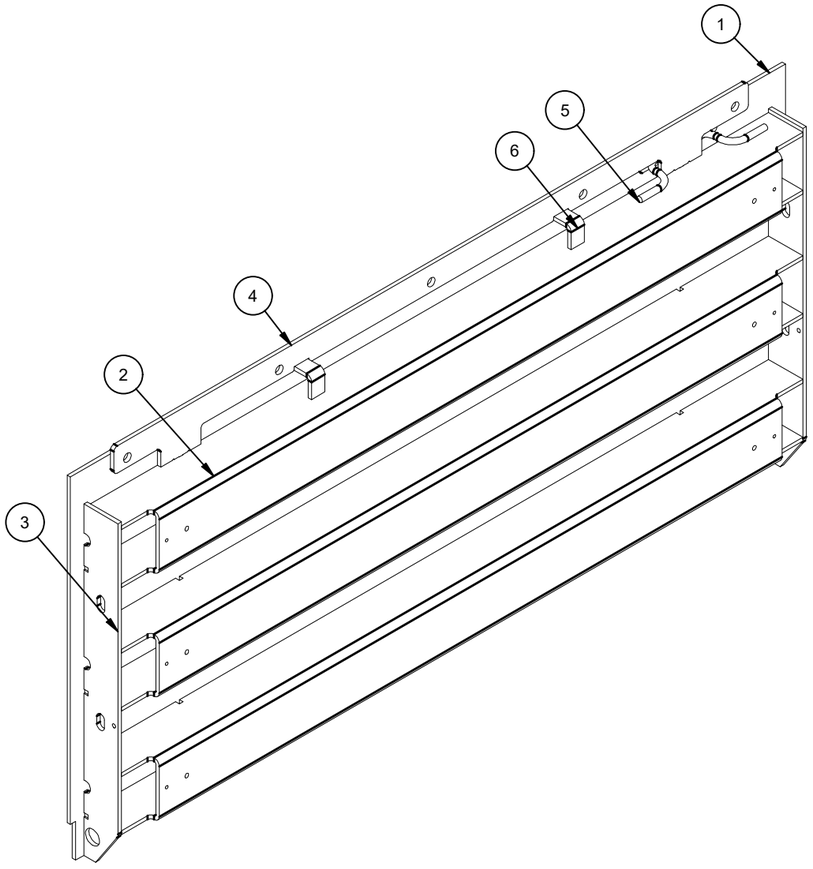

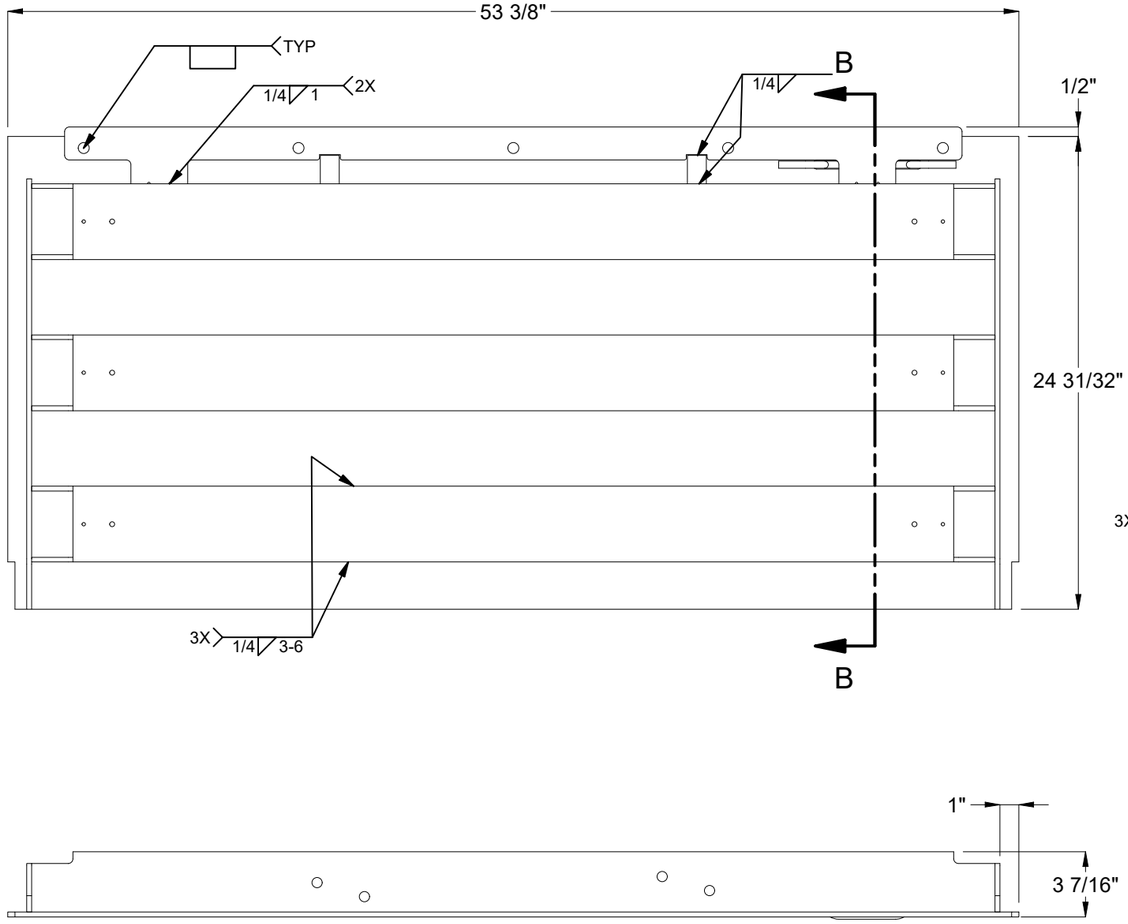

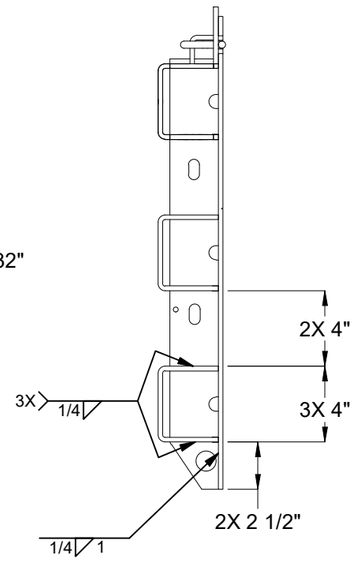

SECTION B-B

MATERIAL FINISH: Raw	Infrastructure JENSEN 527 Dunn Circle, Sparks, NV 89431 775-352-2716 FAX: 755-358-8127 *JENSENMETALTECH.COM*	©2026 Jensen Infrastructure - All rights reserved. All materials appearing as Jensen Infrastructure documents and the like are proprietary work product and are protected under U.S. copyright and other laws. Unless in conjunction with business conducted with Jensen Infrastructure , any use of Jensen Infrastructure work product without express, written consent is prohibited, and recipient is prohibited from distributing any and all work product to non-approved third parties under penalty of civil action. This product shall only be produced in a Jensen Infrastructure facility.	PART NUMBER & DESCRIPTION: 200035866 DAS2-B-4848-H4-DP-R / REV: B-1
MATERIAL SURFACE: Diamond Plate			WEIGHT: 218.28 Lbs / DRAWN BY: A.BILLETT / SHEET: 5
			CREATED: 7/28/2022 / MODIFIED: 3/25/2026

200067075.idw

BILL OF MATERIALS

ITEM	ITEM QTY	QTY	PART NUMBER	DESCRIPTION	PART NAME
1	1	103.487 lbmass	100007736	Door Component Steel Plate, Top	200035872
2	3	100.230 lbmass	100007735	Door Component Steel Channel	200035868
3	2	7.518 lbmass	100007735	Door Component Steel Side Bar	200035867
4	1	1	100007644	LEAF PULL HANDLE A36 3/8IN DIAMETER	100007644
5	2	2	100007647	LIFTING BRACKET STEEL LEAF	100007647
6	1	1	100007646	HANDLE RETAINER STL	100007646
7	2	2	100007970	CAM TOWER CAST STEEL	100007970

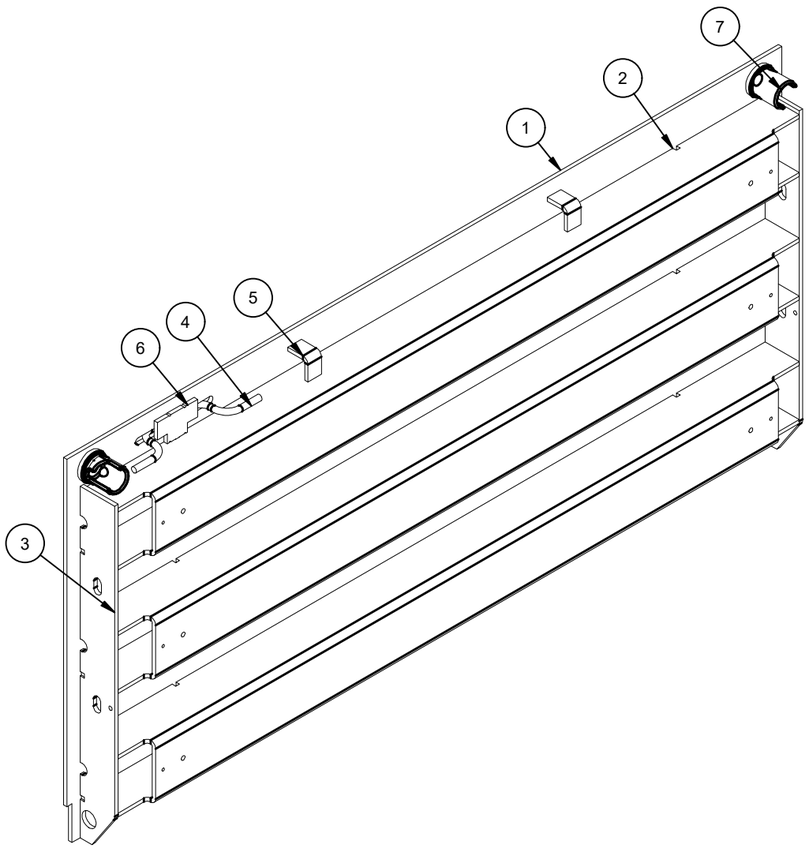

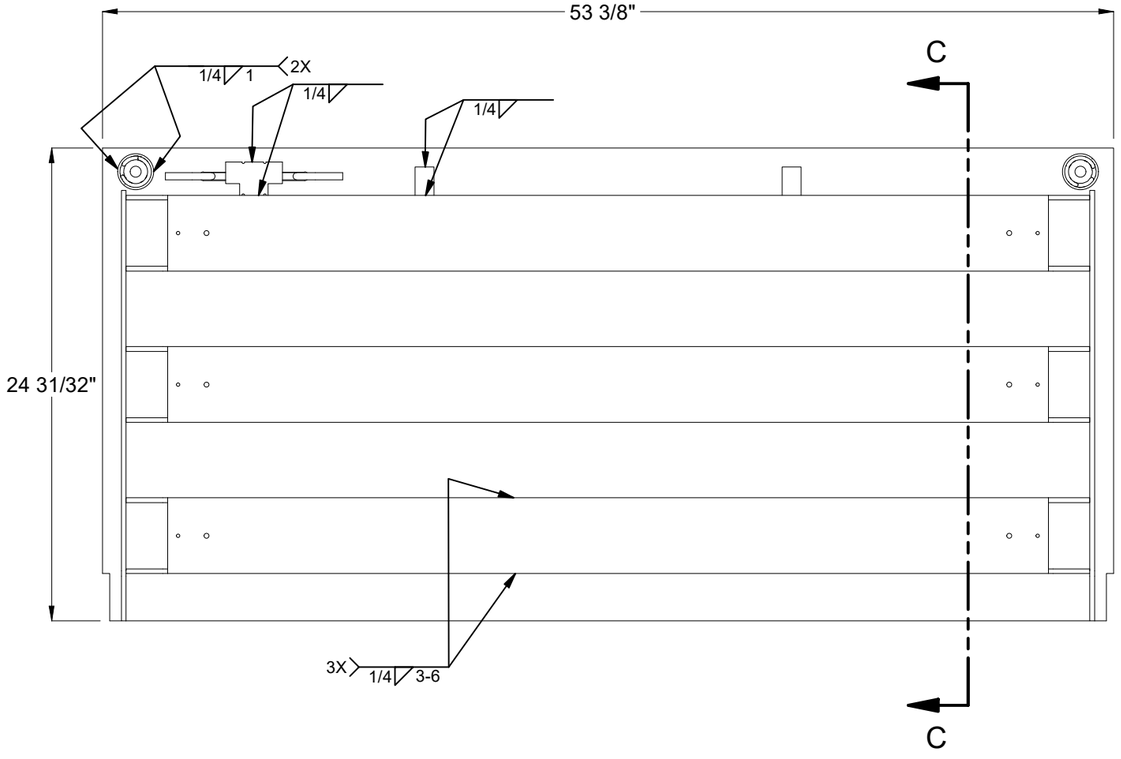

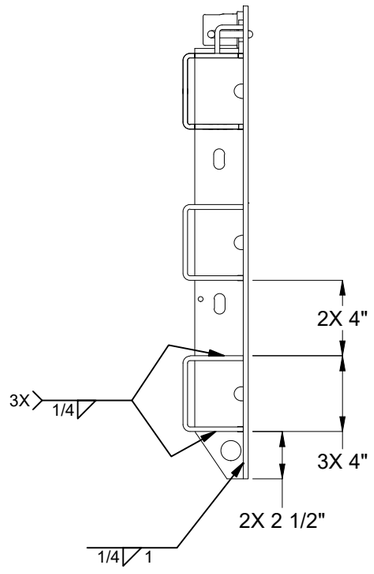

SECTION C-C

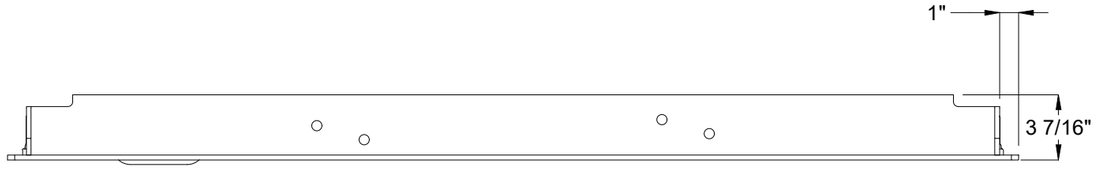

MATERIAL FINISH: Raw	Infrastructure JENSEN 527 Dunn Circle, Sparks, NV 89431 775-352-2716 FAX: 755-358-8127 *JENSENMETALTECH.COM*	©2026 Jensen Infrastructure - All rights reserved. All materials appearing as Jensen Infrastructure documents and the like are proprietary work product and are protected under U.S. copyright and other laws. Unless in conjunction with business conducted with Jensen Infrastructure , any use of Jensen Infrastructure work product without express, written consent is prohibited, and recipient is prohibited from distributing any and all work product to non-approved third parties under penalty of civil action. This product shall only be produced in a Jensen Infrastructure facility.	PART NUMBER & DESCRIPTION: 200035871 DAS2-T-4848-H4-DP-R-CL	REV: B-1
MATERIAL SURFACE: Diamond Plate			WEIGHT: 213.19 Lbs CREATED: 7/28/2022	DRAWN BY: A.BILLETT MODIFIED: 3/25/2026
				SHEET: 6

200067075.idw

BILL OF MATERIALS

ITEM	ITEM QTY	QTY	PART NUMBER	DESCRIPTION	PART NAME
1	2	48.315 lbmass	100007734	Frame Component Steel Frame Side, Adjustable	200035875
2	2	57.090 lbmass	100007734	Frame Component Steel Frame End, Adjustable	200035874
3	4	4	200018691	FRAME BOLT DOUBLER SLOT	200018691
4	2	2	100007728	NUT SELF-CLINCH 1/2-13 S-0813-1 RAW	100007728
5	4	4	100007641	FRAME LIFTING BRACKET	100007641
6	1	1	100007667	NAME PLATE FRAME ANGLE	100007667
7	4	4	100007863	NUT LEVELER 1/2-13 WELDABLE CAST STEEL	
8	2	2	200100755	Frame Cam Latch Catch Plate - 1/4" A36, Dual Door, 0.8125" Overhang	200100755

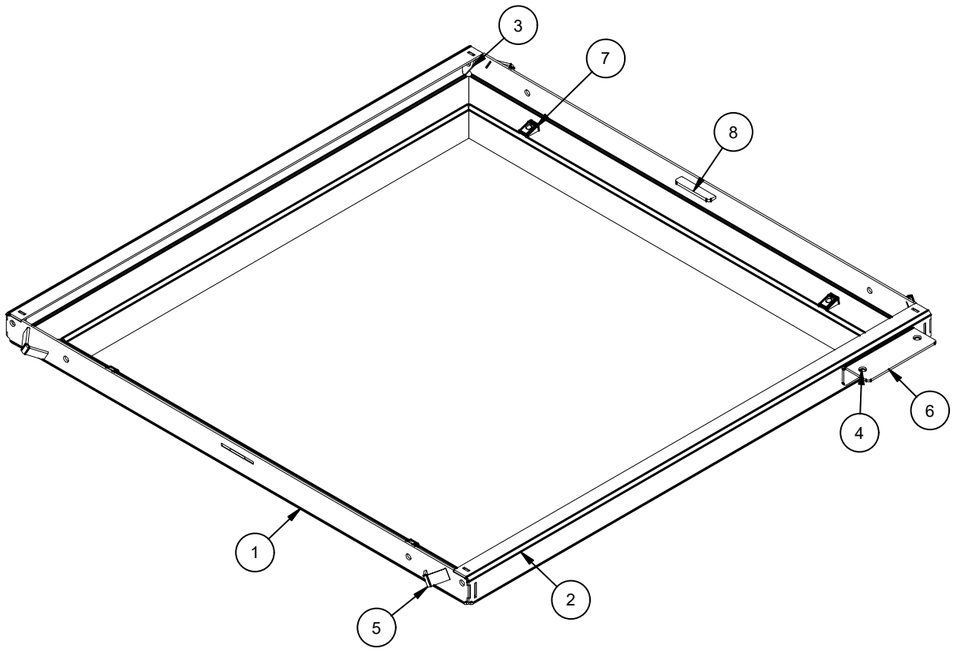

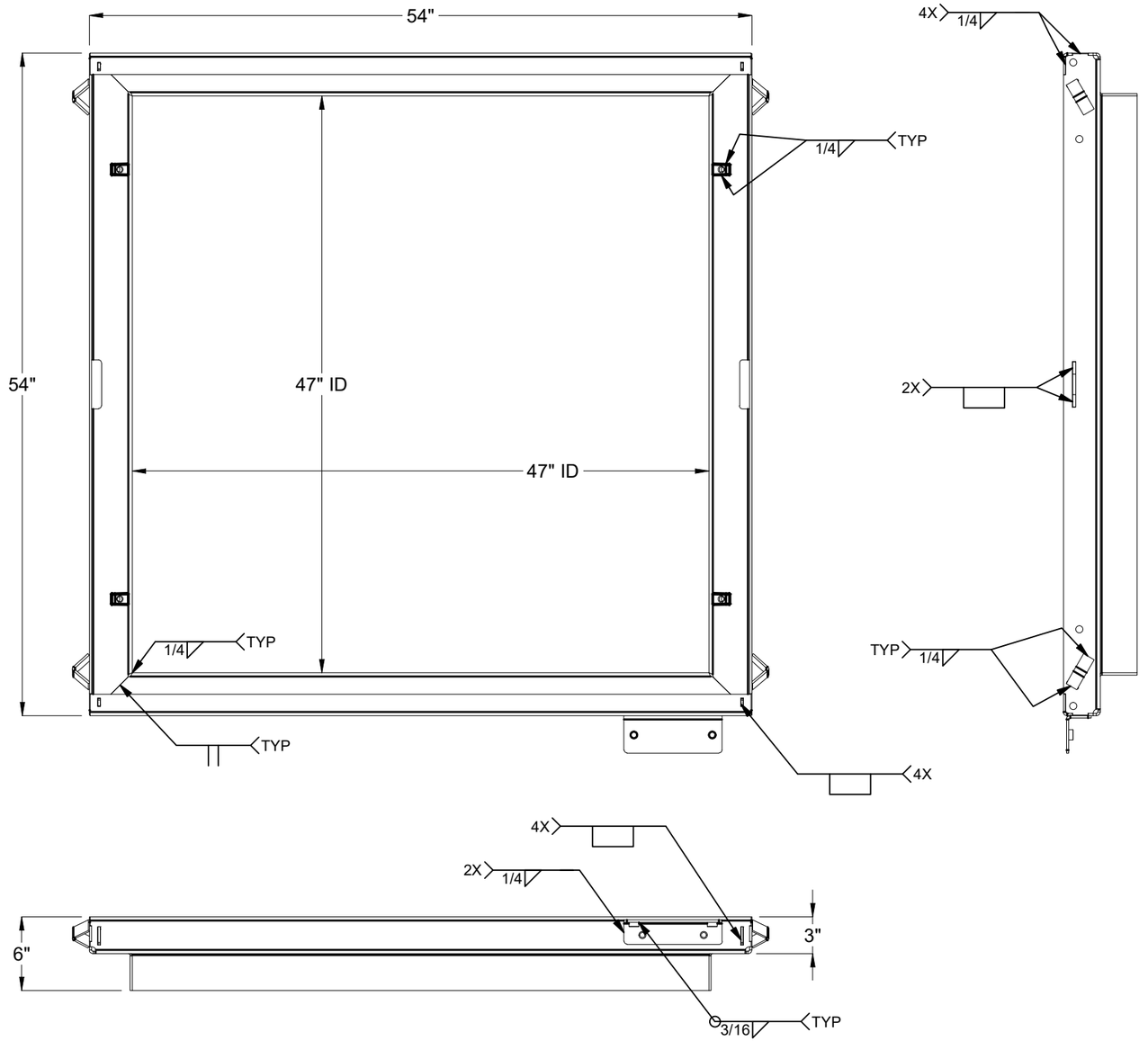

200067075.idw

MATERIAL FINISH: Raw	Infrastructure JENSEN 527 Dunn Circle, Sparks, NV 89431 775-352-2716 FAX: 755-358-8127 *JENSENMETALTECH.COM*	©2026 Jensen Infrastructure - All rights reserved. All materials appearing as Jensen Infrastructure documents and the like are proprietary work product and are protected under U.S. copyright and other laws. Unless in conjunction with business conducted with Jensen Infrastructure , any use of Jensen Infrastructure work product without express, written consent is prohibited, and recipient is prohibited from distributing any and all work product to non-approved third parties under penalty of civil action. This product shall only be produced in a Jensen Infrastructure facility.	PART NUMBER & DESCRIPTION: 200035873 FAS-4848-AH-R-OH06 — REV: B-1
MATERIAL SURFACE: Smooth			WEIGHT: 140 Lbs — DRAWN BY: A.BILLETT — SHEET: 7
			CREATED: 7/28/2022 — MODIFIED: 3/25/2026

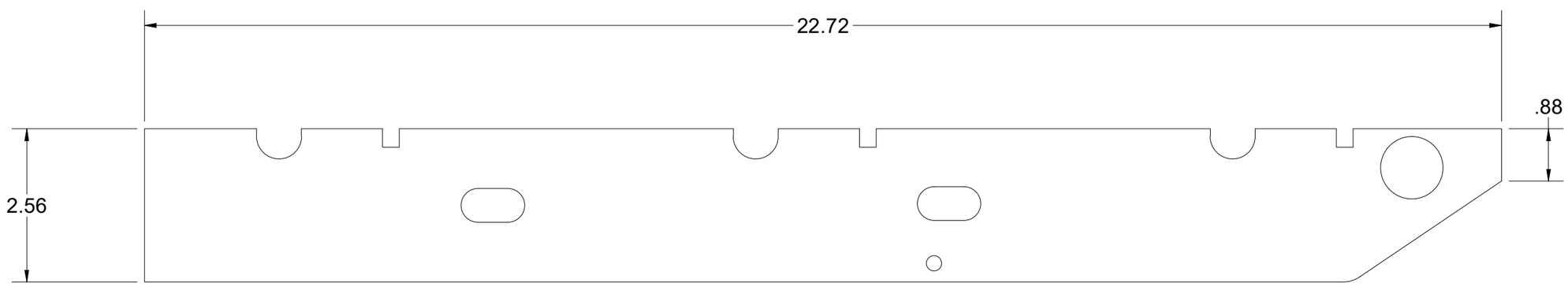

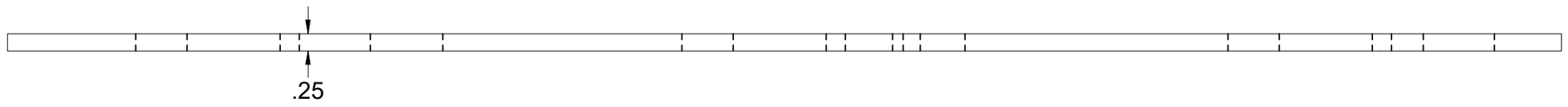

BEND TABLE				MATERIAL IFS: 100007735
BEND RADIUS	V-OPENING	BEND ANGLE	BEND DEDUCTION	MATERIAL THK: 0.25
-	-	-	-	MAT DESCRIPTION: STL ASTM A36 SM-HRPO RAW .250

Infrastructure
JENSEN
527 Dunn Circle, Sparks, NV 89431
775-352-2716 FAX: 755-358-8127
JENSENMETALTECH.COM

©2026 Jensen Infrastructure - All rights reserved.
All materials appearing as Jensen Infrastructure documents and the like are proprietary work product and are protected under U.S. copyright and other laws. Unless in conjunction with business conducted with Jensen Infrastructure , any use of Jensen Infrastructure work product without express, written consent is prohibited, and recipient is prohibited from distributing any and all work product to non-approved third parties under penalty of civil action.
This product shall only be produced in a Jensen Infrastructure facility.

NAME & DESCRIPTION:	200035867 Door Component Steel Side Bar	REV:
WEIGHT: 3.759 lbmass	DRAWN BY: A.BILLETT	SHEET: 8 OF 14
CREATED: 7/28/2022	MODIFIED: 3/25/2026	

200067075.idw

NON-SYMMETRIC

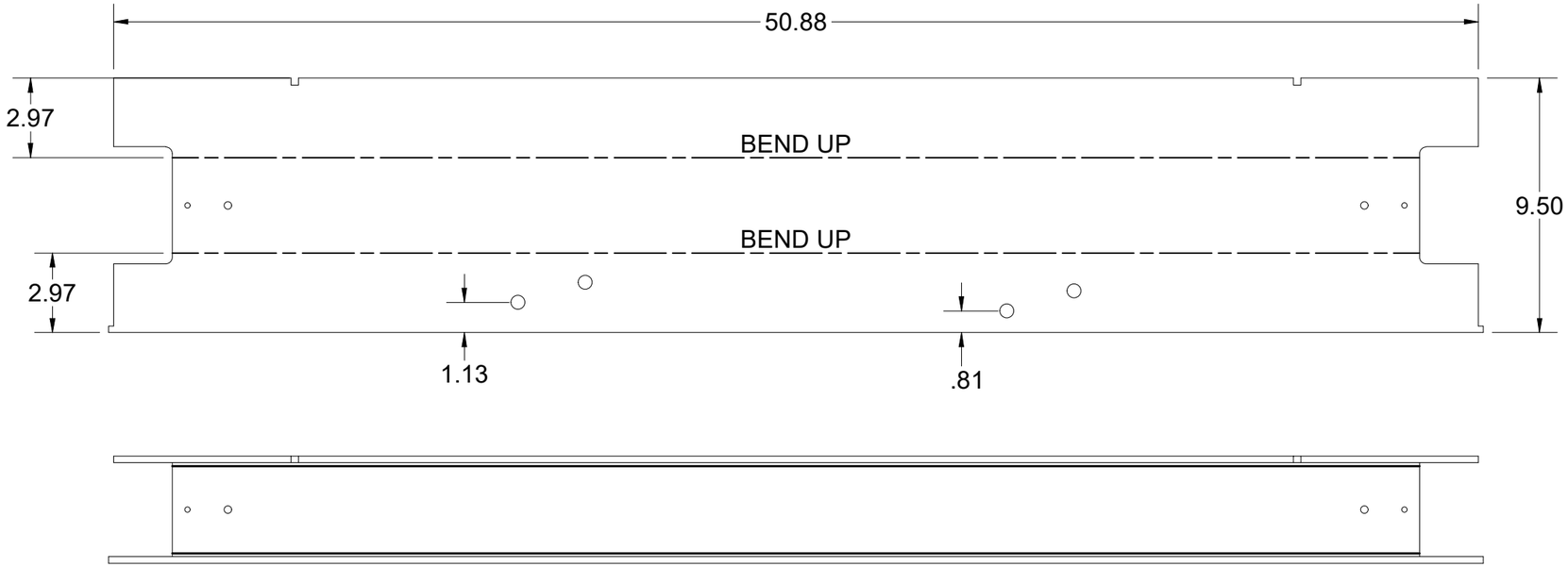

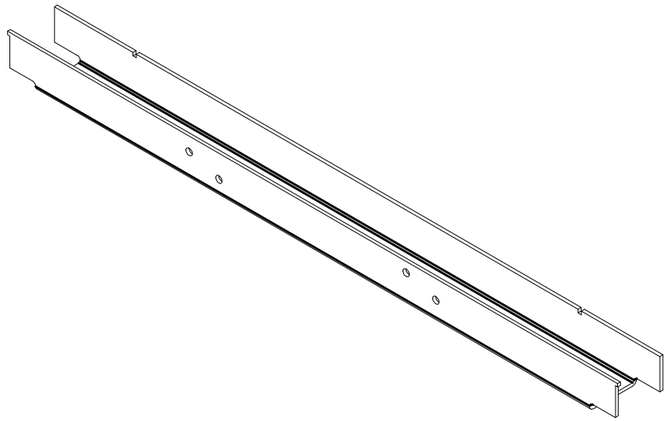

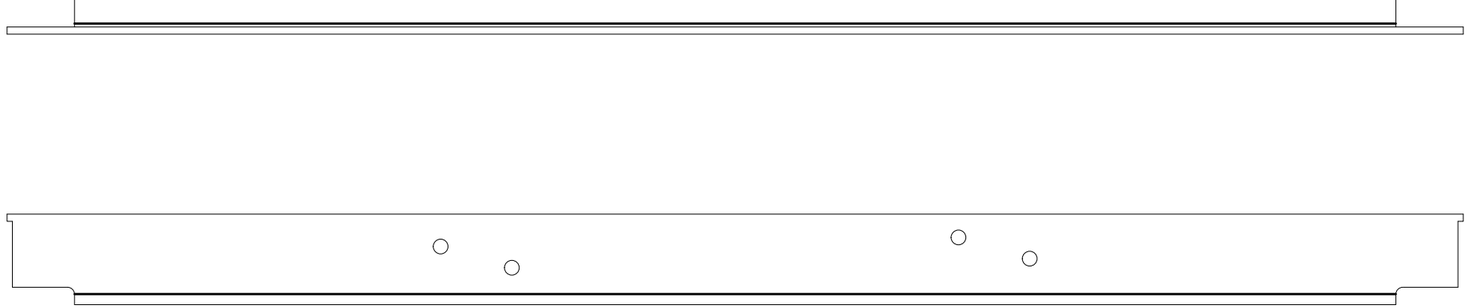

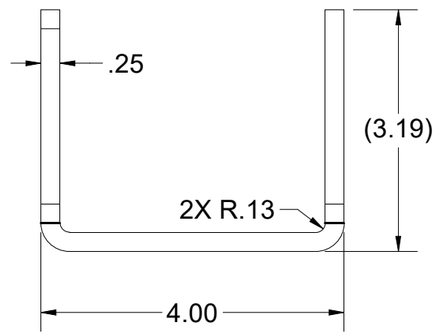

BEND TABLE				MATERIAL IFS: 100007735
BEND RADIUS	V-OPENING	BEND ANGLE	BEND DEDUCTION	MATERIAL THK: 0.25
0.125	2	90	0.440	MAT DESCRIPTION: STL ASTM A36 SM-HRPO RAW .250

Infrastructure JENSEN
527 Dunn Circle, Sparks, NV 89431
775-352-2716 FAX: 755-358-8127
JENSENMETALTECH.COM

©2026 Jensen Infrastructure - All rights reserved. All materials appearing as Jensen Infrastructure documents and the like are proprietary work product and are protected under U.S. copyright and other laws. Unless in conjunction with business conducted with Jensen Infrastructure , any use of Jensen Infrastructure work product without express, written consent is prohibited, and recipient is prohibited from distributing any and all work product to non-approved third parties under penalty of civil action. This product shall only be produced in a Jensen Infrastructure facility.

NAME & DESCRIPTION:	200035868 Door Component Steel Channel		REV: B-1
WEIGHT:	33.410 lbmass	DRAWN BY: A.BILLETT	SHEET: 9 OF 14
CREATED:	7/28/2022	MODIFIED: 3/25/2026	

200067075.idw

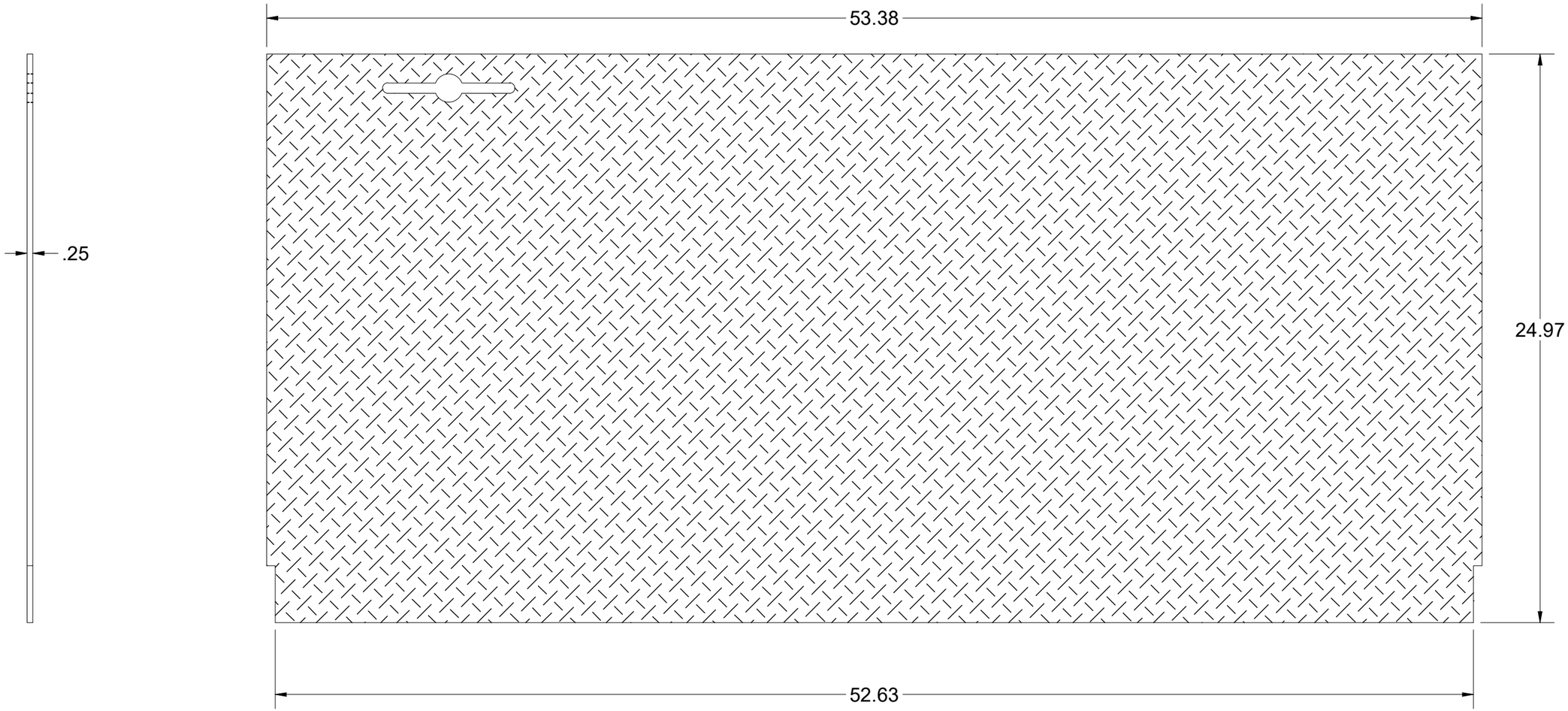

200067075.idw

BEND TABLE				MATERIAL IFS: 100007736	Infrastructure JENSEN 527 Dunn Circle, Sparks, NV 89431 775-352-2716 FAX: 755-358-8127 *JENSENMETALTECH.COM*	©2026 Jensen Infrastructure - All rights reserved. All materials appearing as Jensen Infrastructure documents and the like are proprietary work product and are protected under U.S. copyright and other laws. Unless in conjunction with business conducted with Jensen Infrastructure , any use of Jensen Infrastructure work product without express, written consent is prohibited, and recipient is prohibited from distributing any and all work product to non-approved third parties under penalty of civil action. This product shall only be produced in a Jensen Infrastructure facility.	NAME & DESCRIPTION: 200035869 Door Component Steel Plate, Bottom		REV: B-1
BEND RADIUS	V-OPENING	BEND ANGLE	BEND DEDUCTION	MATERIAL THK: 0.25					
-	-	- 0	-	MAT DESCRIPTION: SHT STL CQ DP RAW .25 - 36 KSI YIELD			WEIGHT: 103.818 lbmass	DRAWN BY: A.BILLETT	SHEET: 10 OF 14
							CREATED: 7/28/2022	MODIFIED: 3/25/2026	

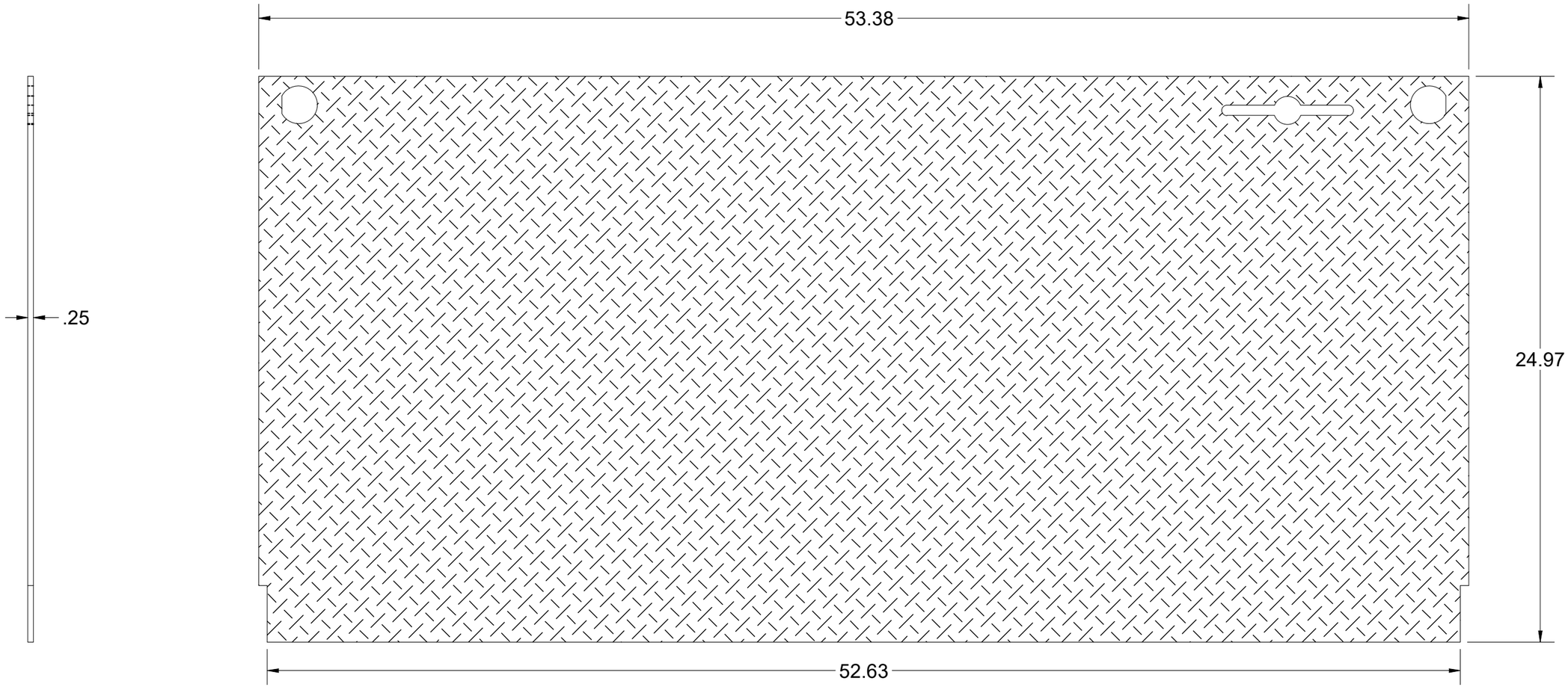

20006707S.idw

BEND TABLE				MATERIAL IFS: 100007736
BEND RADIUS	V-OPENING	BEND ANGLE	BEND DEDUCTION	MATERIAL THK: 0.25
-	-	- 0	-	MAT DESCRIPTION: SHT STL CQ DP RAW .25 - 36 KSI YIELD

Infrastructure JENSEN
527 Dunn Circle, Sparks, NV 89431
775-352-2716 FAX: 755-358-8127
JENSENMETALTECH.COM

©2026 Jensen Infrastructure - All rights reserved.
All materials appearing as Jensen Infrastructure documents and the like are proprietary work product and are protected under U.S. copyright and other laws. Unless in conjunction with business conducted with Jensen Infrastructure , any use of Jensen Infrastructure work product without express, written consent is prohibited, and recipient is prohibited from distributing any and all work product to non-approved third parties under penalty of civil action.
This product shall only be produced in a Jensen Infrastructure facility.

NAME & DESCRIPTION: 200035872 Door Component Steel Plate, Top		REV: B-1
WEIGHT: 103.487 lbmass	DRAWN BY: A.BILLETT	SHEET: 11 OF 14
CREATED: 7/28/2022	MODIFIED: 3/25/2026	

NON-SYMMETRIC

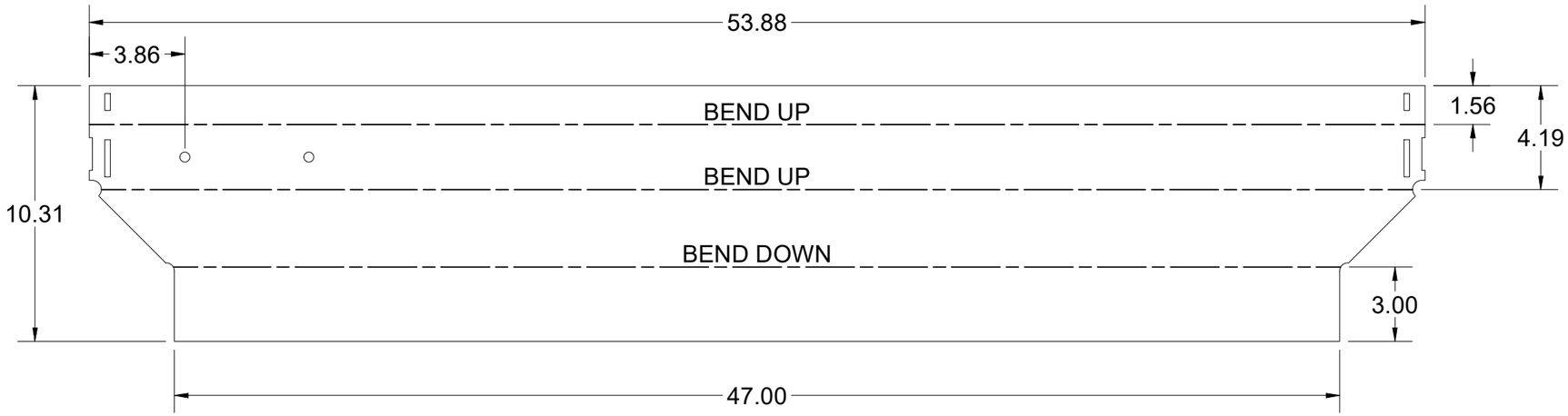

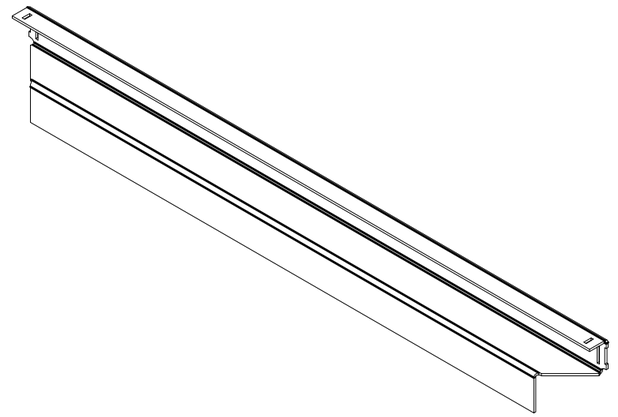

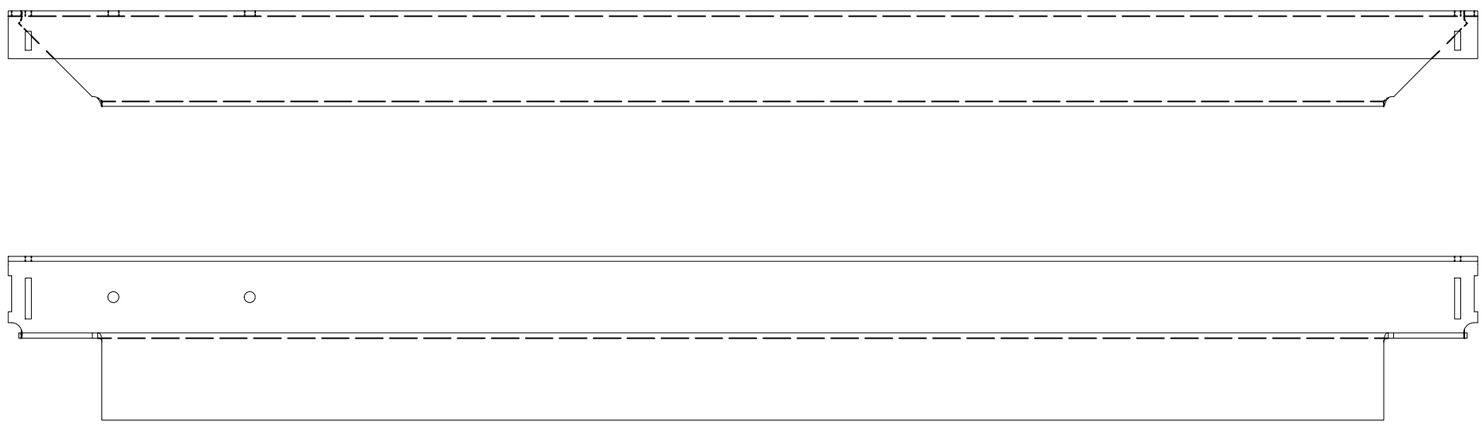

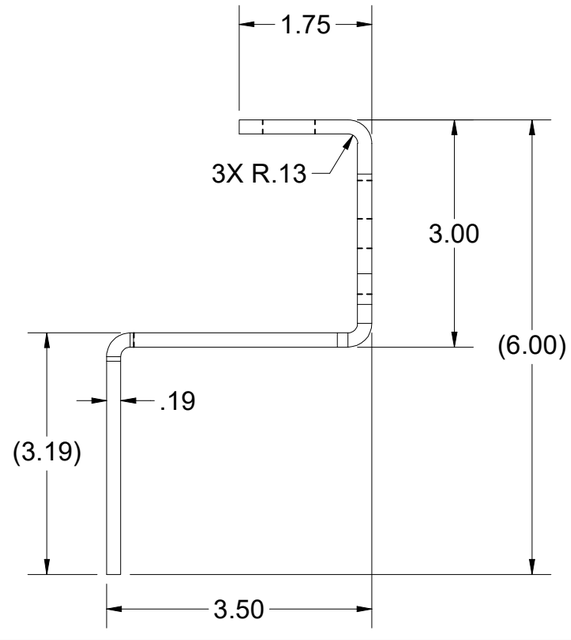

BEND TABLE				MATERIAL IFS: 100007734
BEND RADIUS	V-OPENING	BEND ANGLE	BEND DEDUCTION	MATERIAL THK: 0.1875
0.125	2	90	0.375	MAT DESCRIPTION: STL ASTM A36 SM-HRPO 60X120 RAW .1875

Infrastructure
JENSEN
527 Dunn Circle, Sparks, NV 89431
775-352-2716 FAX: 755-358-8127
JENSENMETALTECH.COM

©2026 Jensen Infrastructure - All rights reserved.
All materials appearing as Jensen Infrastructure documents and the like are proprietary work product and are protected under U.S. copyright and other laws. Unless in conjunction with business conducted with Jensen Infrastructure , any use of Jensen Infrastructure work product without express, written consent is prohibited, and recipient is prohibited from distributing any and all work product to non-approved third parties under penalty of civil action.
This product shall only be produced in a Jensen Infrastructure facility.

NAME & DESCRIPTION: 200035874 Frame Component Steel Frame End, Adjustable		REV: B-1
WEIGHT: 28.545 lbmass	DRAWN BY: A.BILLETT	SHEET: 12 OF 14
CREATED: 7/28/2022	MODIFIED: 3/25/2026	

20006707S.idw

SYMMETRIC

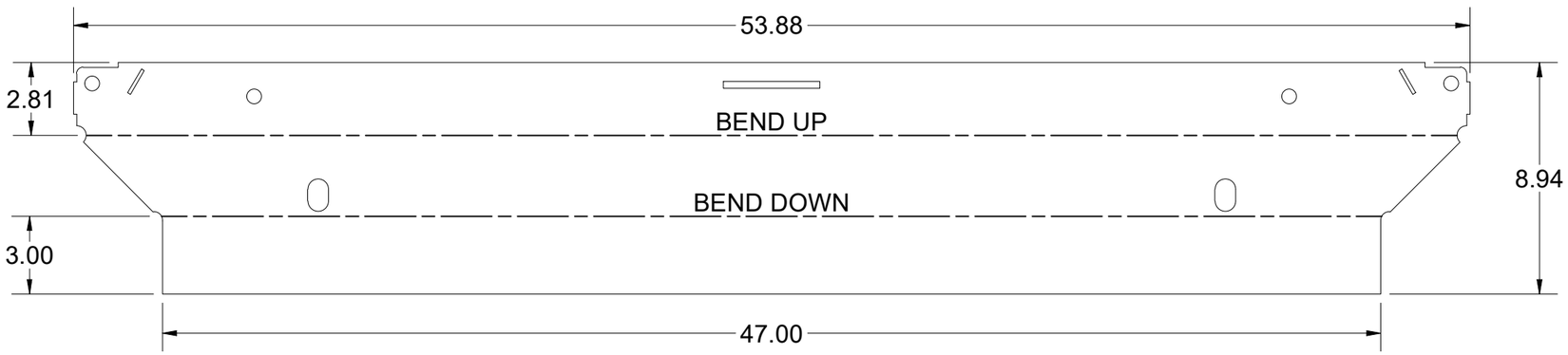

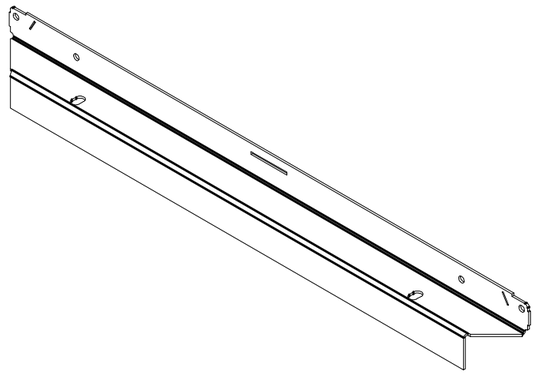

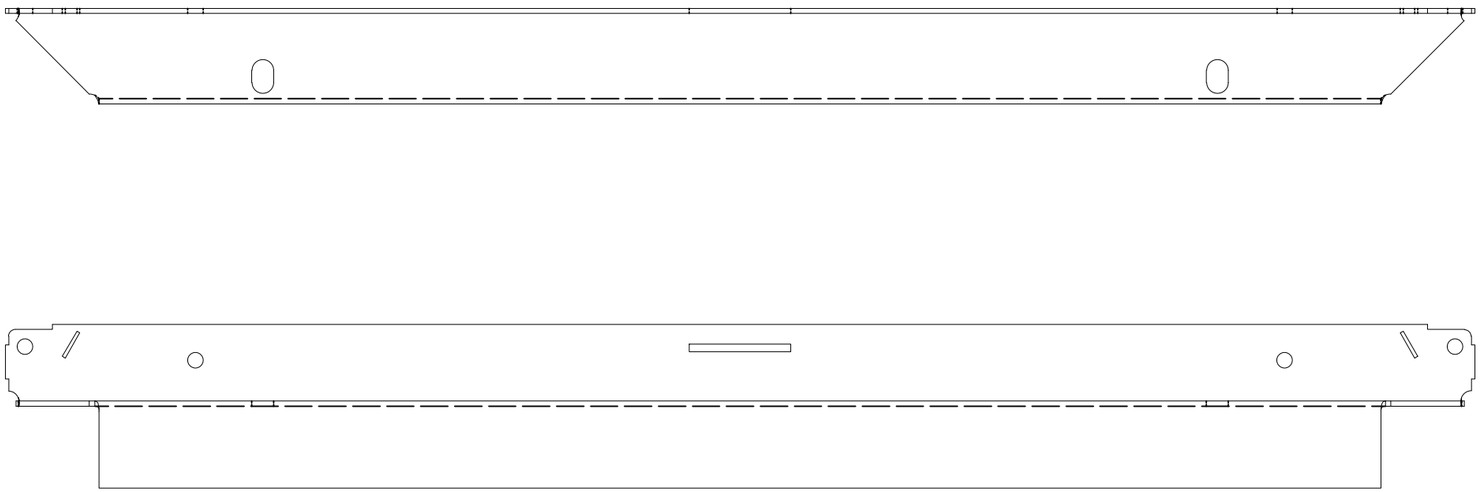

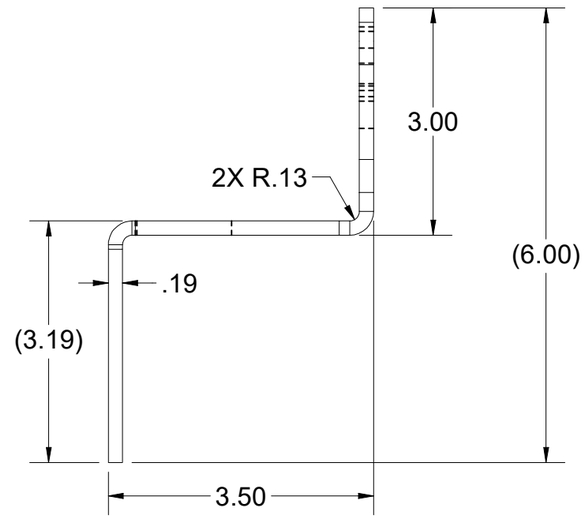

BEND TABLE				MATERIAL IFS: 100007734
BEND RADIUS	V-OPENING	BEND ANGLE	BEND DEDUCTION	MATERIAL THK: 0.1875
0.125	2	90	0.375	MAT DESCRIPTION: STL ASTM A36 SM-HRPO 60X120 RAW .1875

Infrastructure JENSEN
527 Dunn Circle, Sparks, NV 89431
775-352-2716 FAX: 755-358-8127
JENSENMETALTECH.COM

©2026 Jensen Infrastructure - All rights reserved. All materials appearing as Jensen Infrastructure documents and the like are proprietary work product and are protected under U.S. copyright and other laws. Unless in conjunction with business conducted with Jensen Infrastructure , any use of Jensen Infrastructure work product without express, written consent is prohibited, and recipient is prohibited from distributing any and all work product to non-approved third parties under penalty of civil action. This product shall only be produced in a Jensen Infrastructure facility.

NAME & DESCRIPTION: 200035875 Frame Component Steel Frame Side, Adjustable		REV: B-1
WEIGHT: 24.158 lbmass	DRAWN BY: A.BILLETT	SHEET: 13 OF 14
CREATED: 7/28/2022	MODIFIED: 3/25/2026	

200067075.idw

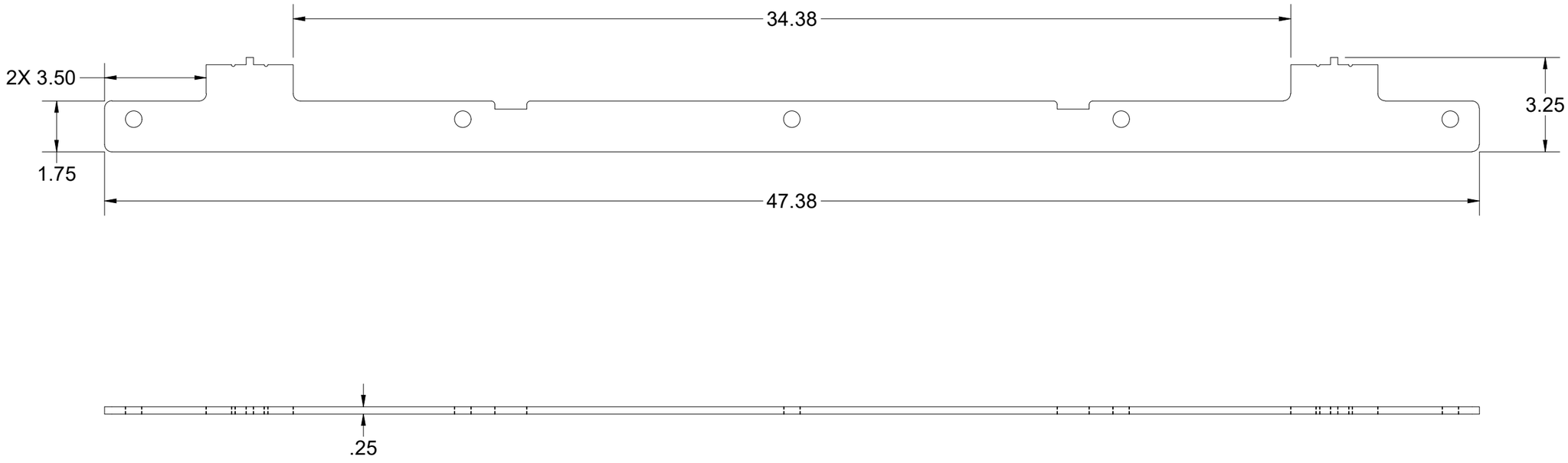

BEND TABLE				MATERIAL IFS: 100007735
BEND RADIUS	V-OPENING	BEND ANGLE	BEND DEDUCTION	MATERIAL THK: 0.25
-	-	-	-	MAT DESCRIPTION: STL ASTM A36 SM-HRPO RAW .250

Infrastructure
JENSEN
527 Dunn Circle, Sparks, NV 89431
775-352-2716 FAX: 755-358-8127
JENSENMETALTECH.COM

©2026 Jensen Infrastructure - All rights reserved.
All materials appearing as Jensen Infrastructure documents and the like are proprietary work product and are protected under U.S. copyright and other laws. Unless in conjunction with business conducted with Jensen Infrastructure , any use of Jensen Infrastructure work product without express, written consent is prohibited, and recipient is prohibited from distributing any and all work product to non-approved third parties under penalty of civil action.
This product shall only be produced in a Jensen Infrastructure facility.

NAME & DESCRIPTION:		REV:
200087252 Door Component Steel Lap Bar 48in, 2.5" Stiffener Offset		B-1
WEIGHT: 6.293 lbmass	DRAWN BY: A.BILLETT	SHEET: 14 OF 14
CREATED: 7/28/2022	MODIFIED: 3/25/2026	

200067075.idw