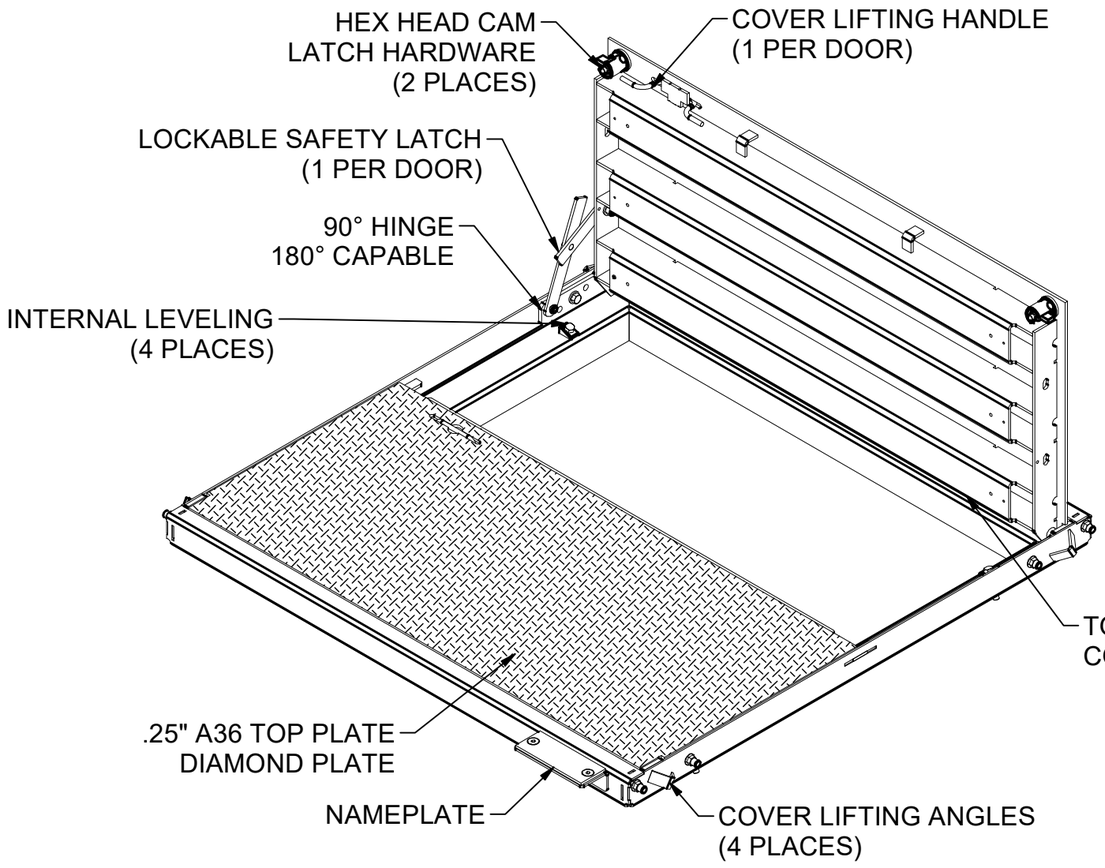

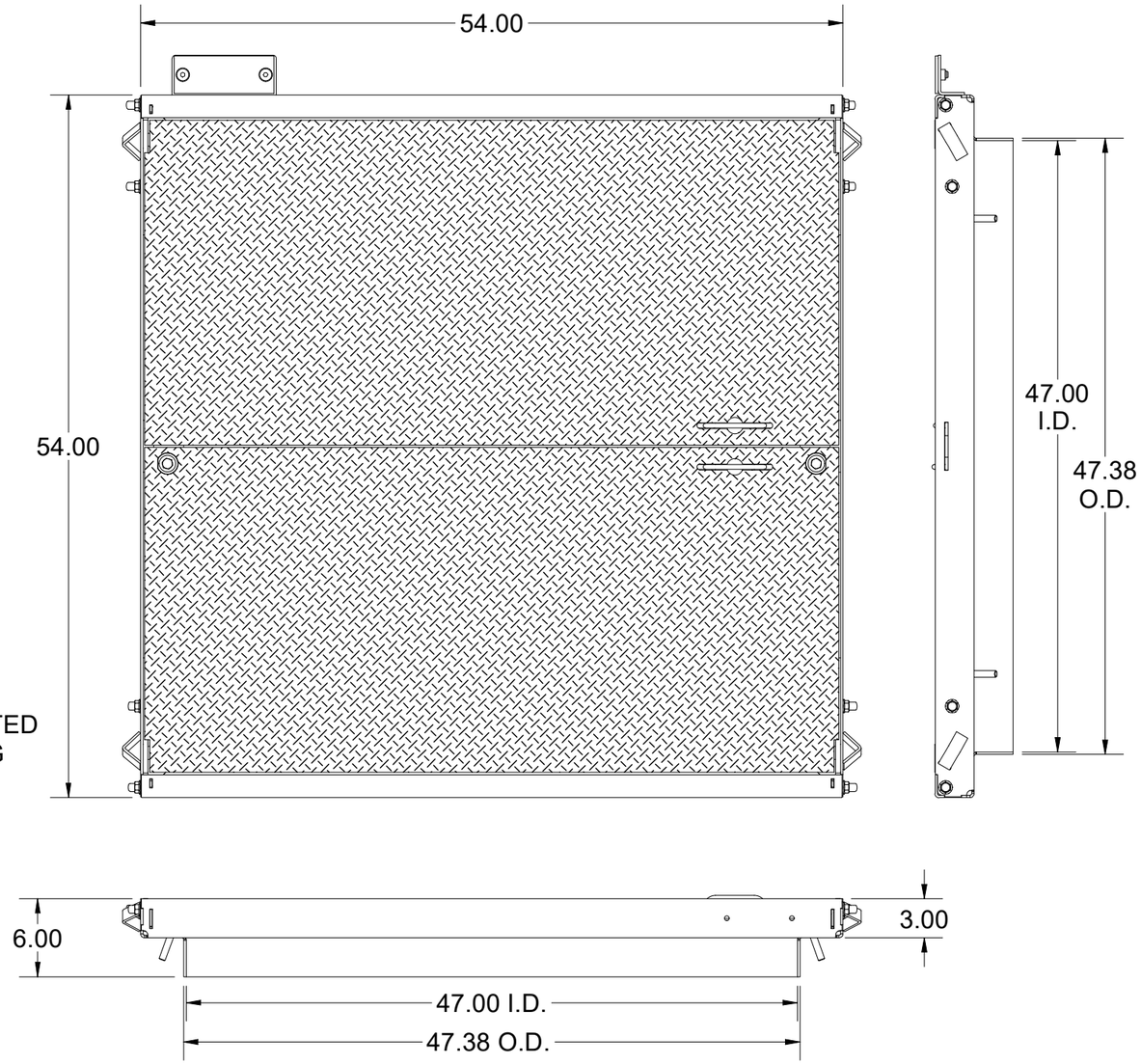

100001502.idw

DESIGNED FOR ROBOT WELDED DOOR

LOADING CRITERIA: ASTM C1802 Load Level 04

16,000 lb load on 10" x 20" footprint, without impact restricted to parking spaces and areas within close proximity of roadways.

SURFACE:	Diamond Plate	FINISH:	Galvanized
WEIGHT:	565.78 lbs	MARKING:	As Noted

Infrastructure
JENSEN
527 Dunn Circle, Sparks, NV 89431
775-352-2716 FAX: 755-358-8127
JENSENMETALTECH.COM

©2026 Jensen Infrastructure - All rights reserved.
All materials appearing as Jensen Infrastructure documents and the like are proprietary work product and are protected under U.S. copyright and other laws. Unless in conjunction with business conducted with Jensen Infrastructure , any use of Jensen Infrastructure work product without express, written consent is prohibited, and recipient is prohibited from distributing any and all work product to non-approved third parties under penalty of civil action.
This product shall only be produced in a Jensen Infrastructure facility.

DESCRIPTION: CAS2-4848-AH4-DP-G-CL-OH06

48x48 Standard Cover Assembly (ASTM C1802 Load Level 04, Steel, Hinged, Handle (1 Per Door), Diamond Plate, Galvanized, N/A, N/A) 06

REV: E

SHEET: 1

PART NUMBER:	100001502	DRAWN BY:	CNation
CREATED:	2/10/2020	MODIFIED:	3/25/2026

BILL OF MATERIALS

ITEM	UNIT QTY	QTY	PART NUMBER	DESCRIPTION	PART NAME
1	1	1	200035873	FAS-4848-AH-R-OH06	200035873
2	1	1	200035871	DAS2-T-4848-H4-DP-R-CL	200035871
3	1	1	200035866	DAS2-B-4848-H4-DP-R	200035866
4	1	8	100026256	LOW-STRENGTH STEEL FLANGE NUT, 1/2" - 13 THREAD SIZE	100026256
5	1	9	100011418	WASHER FLAT 1/2 NARROW ZINC	100011418
6	1	2	100011407	Hex Bolt 1/2-13 UNC ZINC - PT - 2.25"	100011407
7	1	8	100007939	CAP VINYL .467 X 1/2	100007939
8	1	1	100007924	LANYARD 3/64 W/PIN COATED SS	100007924
9	1	2	100007918	COTTER PIN 0.094DIA X 1-1/4	100007918
10	1	2	100007915	SPRING COMPRESSION 055 X 5/8 X 7/8 LONG	100007915
11	1	1	100007882	Rivet Blind Grip .1875" Large Domed Head Range-0.376-0.5" Steel	100007882
12	1	2	100007876	Bolt Shoulder Socket Head - 3/8-16 UNC - SD-0.5" - SL-0.3125" - Grade 5 - Zinc	100007876
13	1	4	100007873	BOLT SHCS 3/8-16 X 1-1/4 PLATED	100007873
14	1	4	100007869	BOLT SOCKET CAP - 1/2-13 UNC - 1.75 - 316SS	100007869
15	1	4	100007859	RIVET NUT 3/8-16 FLAT KNURLED	100007859
16	1	2	100007857	NUT FINGER 1/2-13 BRASS	100007857
17	1	2	100007733	Bolt Socket Flat Countersunk Head - 1/2-13 UNC - Grade 5 - Zinc - FT - 1"	100007733
18	1	2	100007729	HEX NUT SLOTTED CASTLE HEAD 1/2-13 SS	100007729
19	1	2	100007727	TORSION HEX ROD 1/2 X 36 RAW	100007727
20	1	2	100007671	SPRING MOUNT ASSY .500	100007671
21	1	2	100007660	Hinge Assembly, Right, 1/2, Steel	100007660
22	1	2	100007659	Hinge Assembly, Left, 1/2, Steel	100007659
23	1	2	100007492	HEX NUT NYLOCK - 1/2-13 UNC - GR5 - ZINC	100007492
24	1	1	100007391	NAME PLATE STEEL - BLANK	100007391
25	1	4	100005059	BOLT HEX 1/2-13 UNC 2.5 ZINC	100005059
26	1	5	100003823	Hex Bolt 1/2-13 UNC ZINC - PT - 1.5"	100003823
27	1	2	100007933	SAFETY LATCH ASSY FOR UNI AND 90 D HINGE	100007933

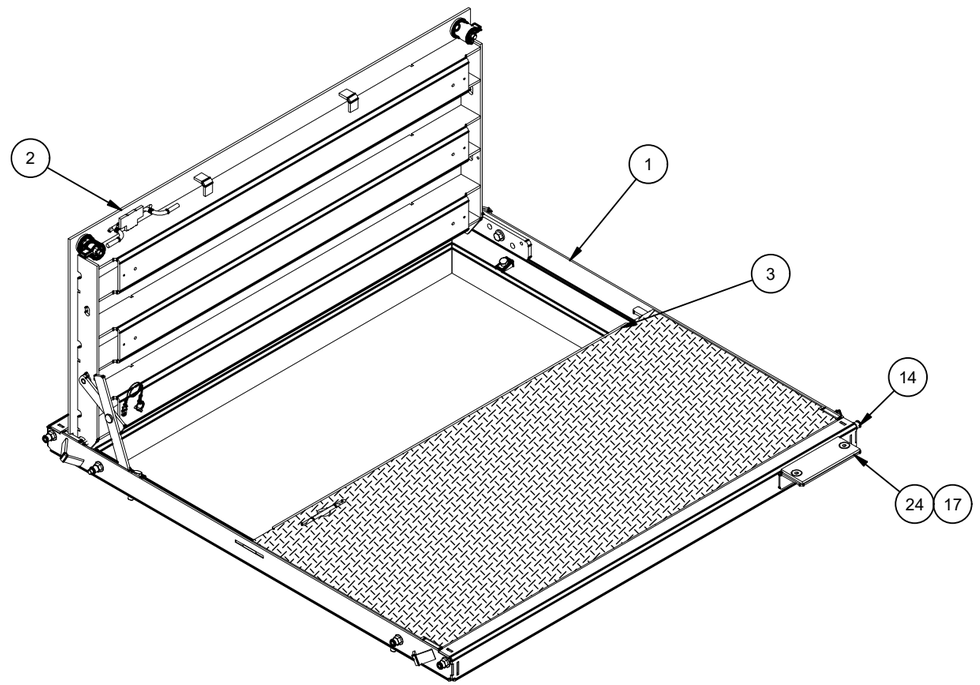

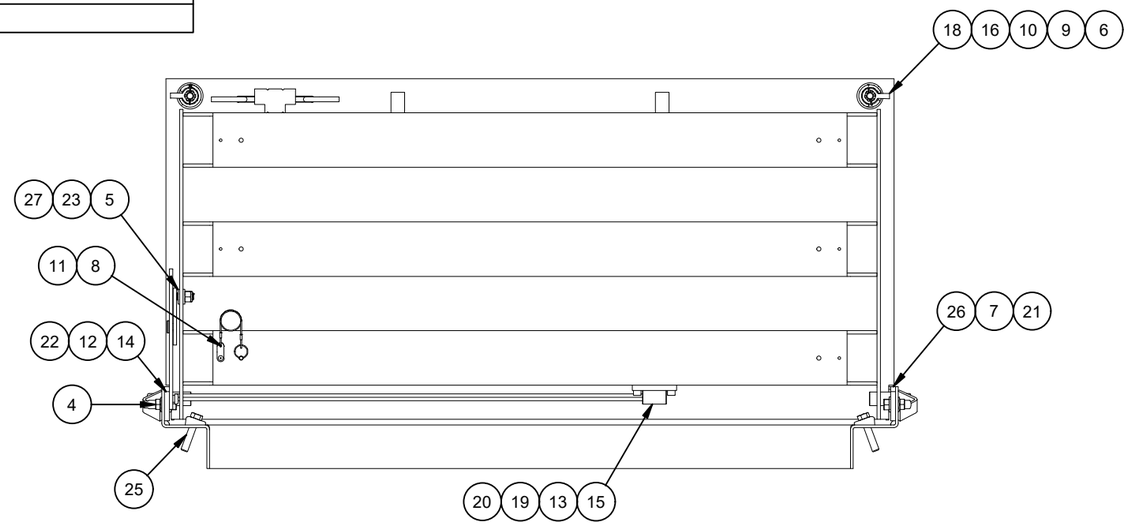

100001502.idw

REVISION HISTORY	
DESCRIPTION	DATE
CHANGED LAP BAR AND UPDATED DRAWINGS, NEW NEST, NEW PS	6/7/23
ECR 57267-1 REMOVED EXTRANEOUS STIFFENER CHANNEL FROM DRAWING. UPDATED LAP BAR AND HANDLE RETAINER PLATE	7/15/24
FIXED FRAME CORNERS AND SWAPPED TO MODERN CAM LATCH. STIFFENERS/TOP PLATE/WEIGHT DID NOT CHANGE SO NO CALCS WERE RE-RUN	3/25/2026

MATERIAL FINISH: Galvanized

MATERIAL SURFACE: Diamond Plate

Infrastructure JENSEN

527 Dunn Circle, Sparks, NV 89431
775-352-2716 FAX: 755-358-8127
JENSENMETALTECH.COM

©2026 Jensen Infrastructure - All rights reserved.
All materials appearing as Jensen Infrastructure documents and the like are proprietary work product and are protected under U.S. copyright and other laws. Unless in conjunction with business conducted with Jensen Infrastructure , any use of Jensen Infrastructure work product without express, written consent is prohibited, and recipient is prohibited from distributing any and all work product to non-approved third parties under penalty of civil action.
This product shall only be produced in a Jensen Infrastructure facility.

PART NUMBER & DESCRIPTION: 100001502 CAS2-4848-AH4-DP-G-CL-OH06

REV: E

WEIGHT: 565.78 Lbs

DRAWN BY: CNation

CREATED: 2/10/2020

MODIFIED: 3/25/2026

SHEET: 2

BURN LIST - BOM

PART NAME	ITEM QTY	PART NUMBER	DESCRIPTION	STOCK NUMBER	MATERIAL	MASS	SHEET
200035867	4	100007735	Door Component Steel Side Bar	100007735	STL ASTM A36 SM-HRPO RAW .250	3.759 lbmass	07
200035868	6	100007735	Door Component Steel Channel	100007735	STL ASTM A36 SM-HRPO RAW .250	33.410 lbmass	08
200035869	1	100007736	Door Component Steel Plate, Bottom	100007736	SHT STL CQ DP RAW .25 - 36 KSI YIELD	103.818 lbmass	09
200035872	1	100007736	Door Component Steel Plate, Top	100007736	SHT STL CQ DP RAW .25 - 36 KSI YIELD	103.487 lbmass	10
200035874	2	100007734	Frame Component Steel Frame End, Adjustable	100007734	STL ASTM A36 SM-HRPO 60X120 RAW .1875	28.545 lbmass	11
200035875	2	100007734	Frame Component Steel Frame Side, Adjustable	100007734	STL ASTM A36 SM-HRPO 60X120 RAW .1875	24.158 lbmass	12
200087252	1	100007735	Door Component Steel Lap Bar 48in, 2.5" Stiffener Offset	100007735	STL ASTM A36 SM-HRPO RAW .250	6.293 lbmass	13

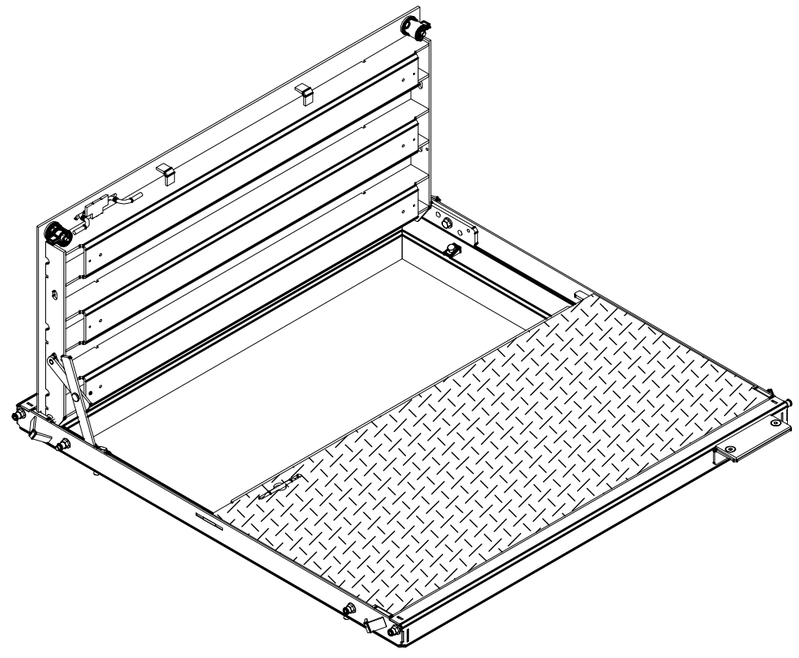

100001502.idw

MATERIAL FINISH: Galvanized

MATERIAL SURFACE: Diamond Plate

Infrastructure JENSEN

527 Dunn Circle, Sparks, NV 89431
775-352-2716 FAX: 755-358-8127
JENSENMETALTECH.COM

©2026 Jensen Infrastructure - All rights reserved.
All materials appearing as Jensen Infrastructure documents and the like are proprietary work product and are protected under U.S. copyright and other laws. Unless in conjunction with business conducted with Jensen Infrastructure , any use of Jensen Infrastructure work product without express, written consent is prohibited, and recipient is prohibited from distributing any and all work product to non-approved third parties under penalty of civil action.
This product shall only be produced in a Jensen Infrastructure facility.

PART NUMBER & DESCRIPTION: 100001502 CAS2-4848-AH4-DP-G-CL-OH06

REV: E

WEIGHT: 565.78 Lbs

DRAWN BY: CNation

CREATED: 2/10/2020

MODIFIED: 3/25/2026

SHEET: 3

BILL OF MATERIALS

ITEM	UNIT QTY	QTY	PART NUMBER	DESCRIPTION	PART NAME
1	33.410 lbmass	100.230 lbmass	100007735	Door Component Steel Channel	200035868
2	103.818 lbmass	103.818 lbmass	100007736	Door Component Steel Plate, Bottom	200035869
3	6.293 lbmass	6.293 lbmass	100007735	Door Component Steel Lap Bar 48in, 2.5" Stiffener Offset	200087252
4	3.759 lbmass	7.518 lbmass	100007735	Door Component Steel Side Bar	200035867
5	1	1	100007644	LEAF PULL HANDLE A36 3/8IN DIAMETER	100007644
6	1	2	100007647	LIFTING BRACKET STEEL LEAF	100007647

ROBOT WELDED

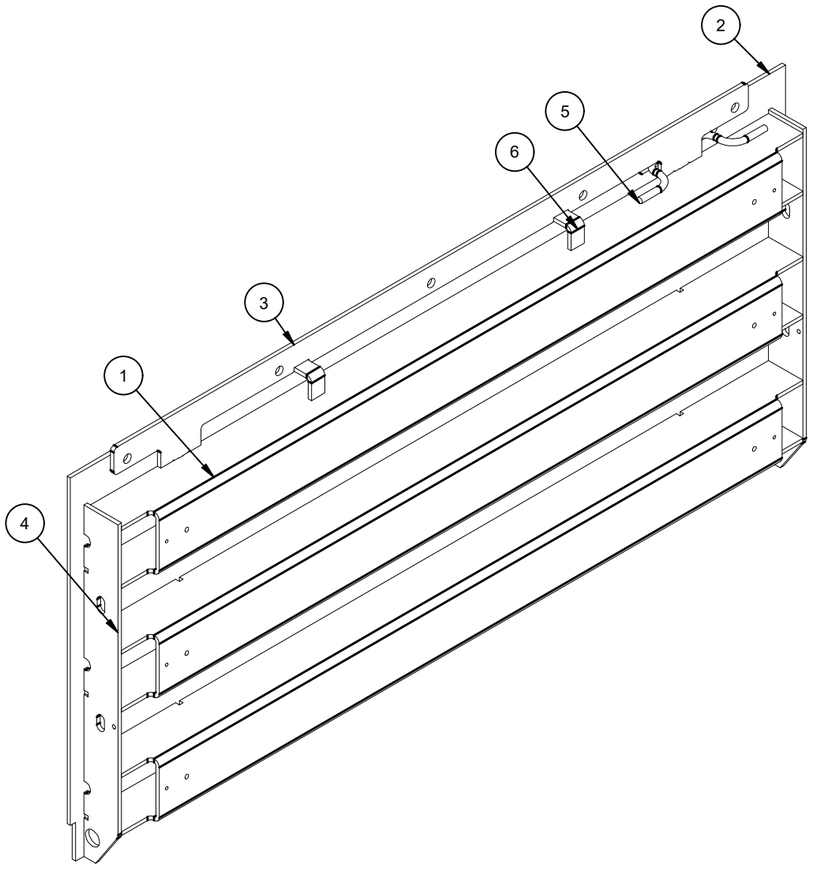

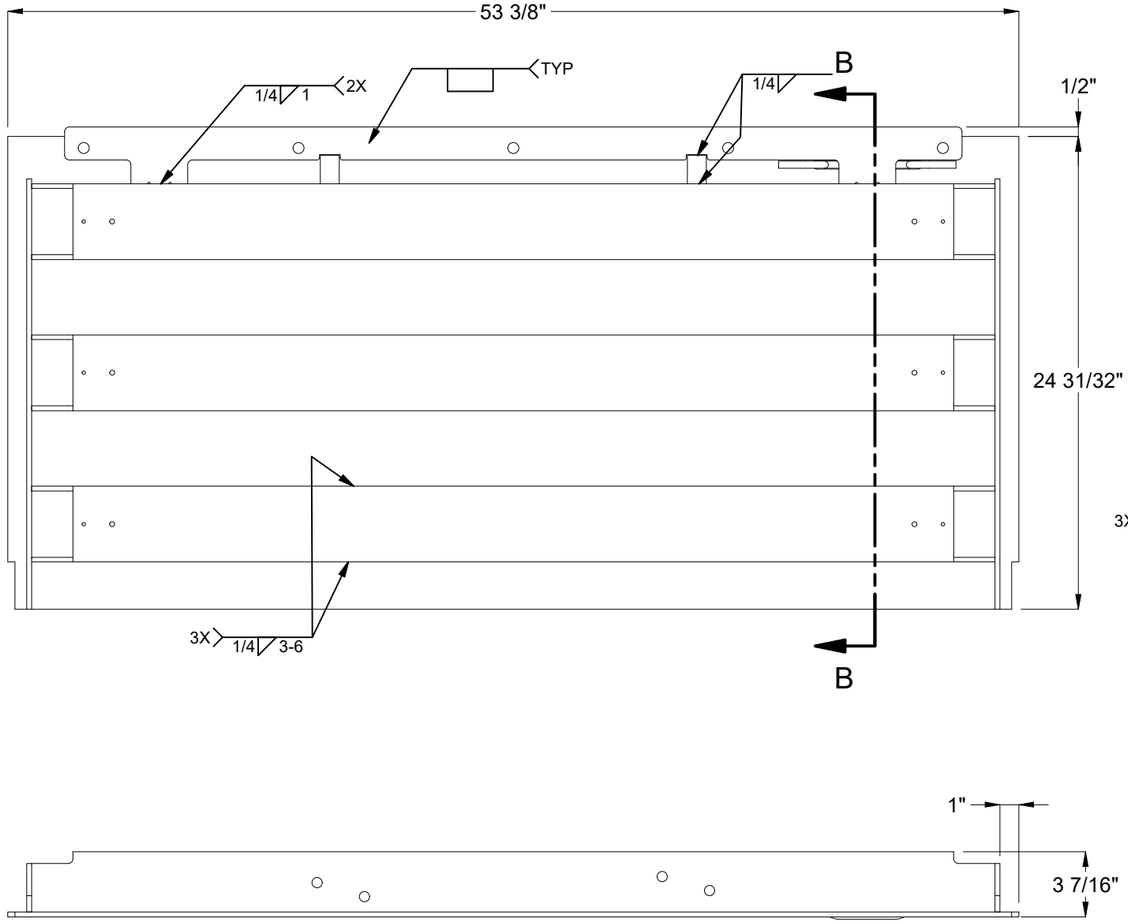

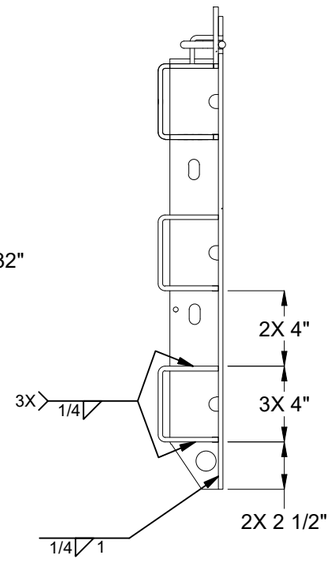

SECTION B-B

MATERIAL FINISH: Raw	Infrastructure JENSEN 527 Dunn Circle, Sparks, NV 89431 775-352-2716 FAX: 755-358-8127 *JENSENMETALTECH.COM*	©2026 Jensen Infrastructure - All rights reserved. All materials appearing as Jensen Infrastructure documents and the like are proprietary work product and are protected under U.S. copyright and other laws. Unless in conjunction with business conducted with Jensen Infrastructure , any use of Jensen Infrastructure work product without express, written consent is prohibited, and recipient is prohibited from distributing any and all work product to non-approved third parties under penalty of civil action. This product shall only be produced in a Jensen Infrastructure facility.	PART NUMBER & DESCRIPTION: 200035866 DAS2-B-4848-H4-DP-R / REV: E
MATERIAL SURFACE: Diamond Plate			WEIGHT: 218.28 Lbs / DRAWN BY: CNation / SHEET: 4
			CREATED: 2/10/2020 / MODIFIED: 3/25/2026

100001502.idw

BILL OF MATERIALS

ITEM	UNIT QTY	QTY	PART NUMBER	DESCRIPTION	PART NAME
1	33.410 lbmass	100.230 lbmass	100007735	Door Component Steel Channel	200035868
2	103.487 lbmass	103.487 lbmass	100007736	Door Component Steel Plate, Top	200035872
3	3.759 lbmass	7.518 lbmass	100007735	Door Component Steel Side Bar	200035867
4	1	1	100007646	HANDLE RETAINER STL	100007646
5	1	1	100007644	LEAF PULL HANDLE A36 3/8IN DIAMETER	100007644
6	1	2	100007970	CAM TOWER CAST STEEL	100007970
7	1	2	100007647	LIFTING BRACKET STEEL LEAF	100007647

ROBOT WELDED

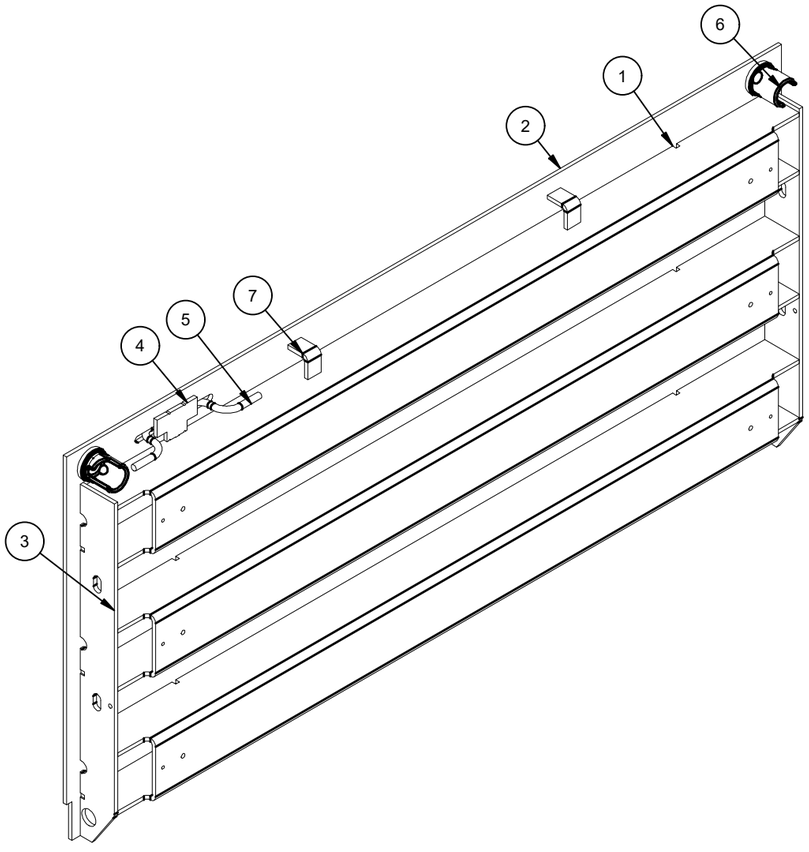

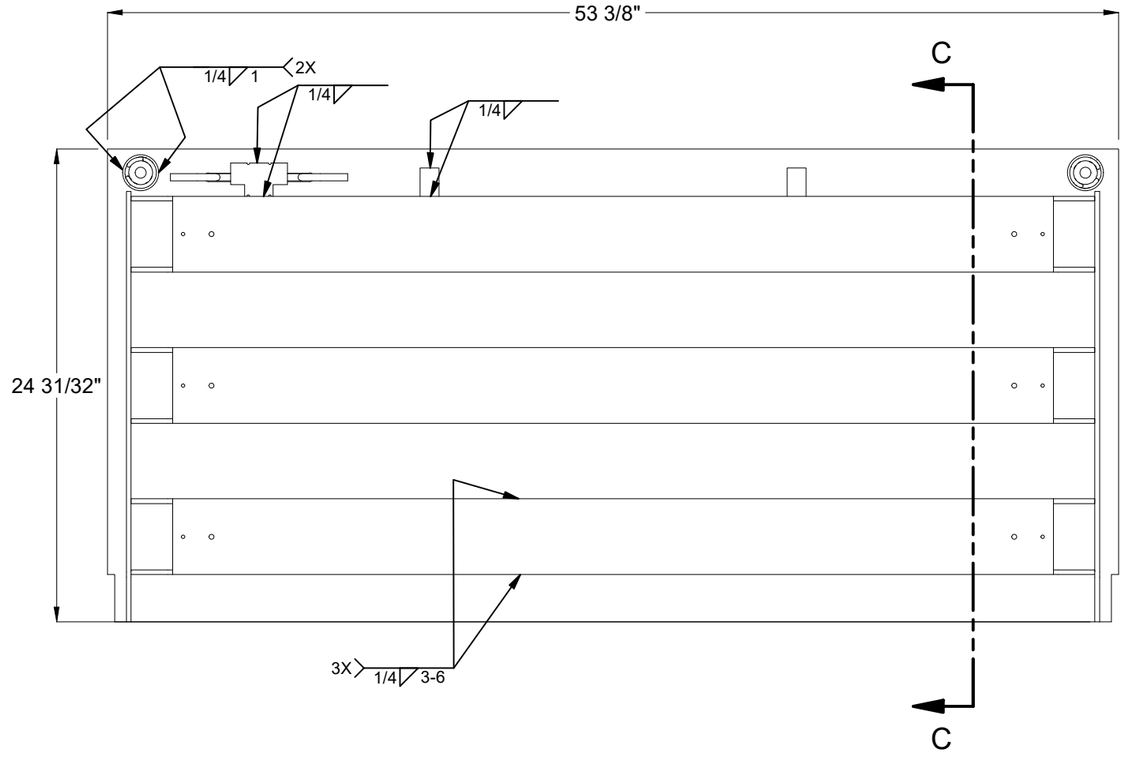

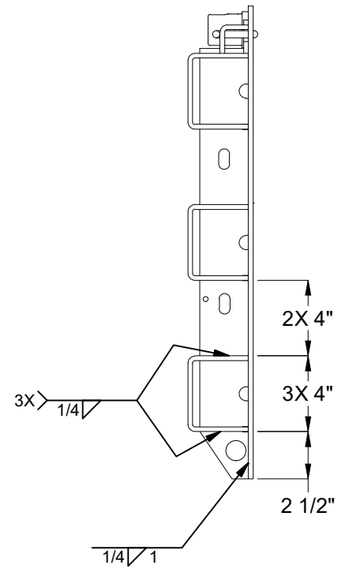

SECTION C-C

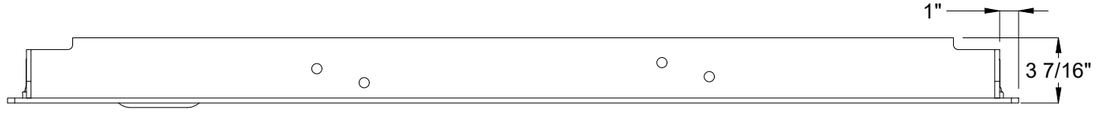

MATERIAL FINISH: Raw	Infrastructure JENSEN 527 Dunn Circle, Sparks, NV 89431 775-352-2716 FAX: 755-358-8127 *JENSENMETALTECH.COM*	©2026 Jensen Infrastructure - All rights reserved. All materials appearing as Jensen Infrastructure documents and the like are proprietary work product and are protected under U.S. copyright and other laws. Unless in conjunction with business conducted with Jensen Infrastructure , any use of Jensen Infrastructure work product without express, written consent is prohibited, and recipient is prohibited from distributing any and all work product to non-approved third parties under penalty of civil action. This product shall only be produced in a Jensen Infrastructure facility.	PART NUMBER & DESCRIPTION: 200035871 DAS2-T-4848-H4-DP-R-CL — REV: E
MATERIAL SURFACE: Diamond Plate			WEIGHT: 213.19 Lbs — DRAWN BY: CNation — SHEET: 5
			CREATED: 2/10/2020 — MODIFIED: 3/25/2026

100001502.idw

BILL OF MATERIALS

ITEM	UNIT QTY	QTY	PART NUMBER	DESCRIPTION	PART NAME
1	24.158 lbmass	48.315 lbmass	100007734	Frame Component Steel Frame Side, Adjustable	200035875
2	28.545 lbmass	57.090 lbmass	100007734	Frame Component Steel Frame End, Adjustable	200035874
3	1	4	200018691	FRAME BOLT DOUBLER SLOT	200018691
4	1	2	100007728	NUT SELF-CLINCH 1/2-13 S-0813-1 RAW	100007728
5	1	4	100007641	FRAME LIFTING BRACKET	100007641
6	1	1	100007667	NAME PLATE FRAME ANGLE	100007667
7	1	4	100007863	NUT LEVELER 1/2-13 WELDABLE CAST STEEL	100007863
8	1	2	200100755	Frame Cam Latch Catch Plate - 1/4" A36, Dual Door, 0.8125" Overhang	200100755

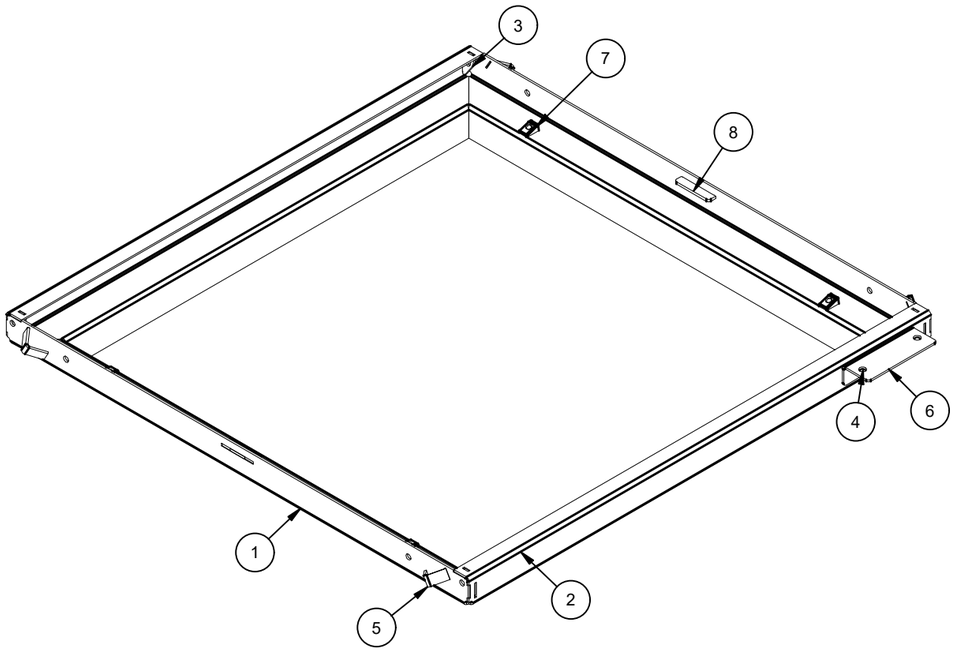

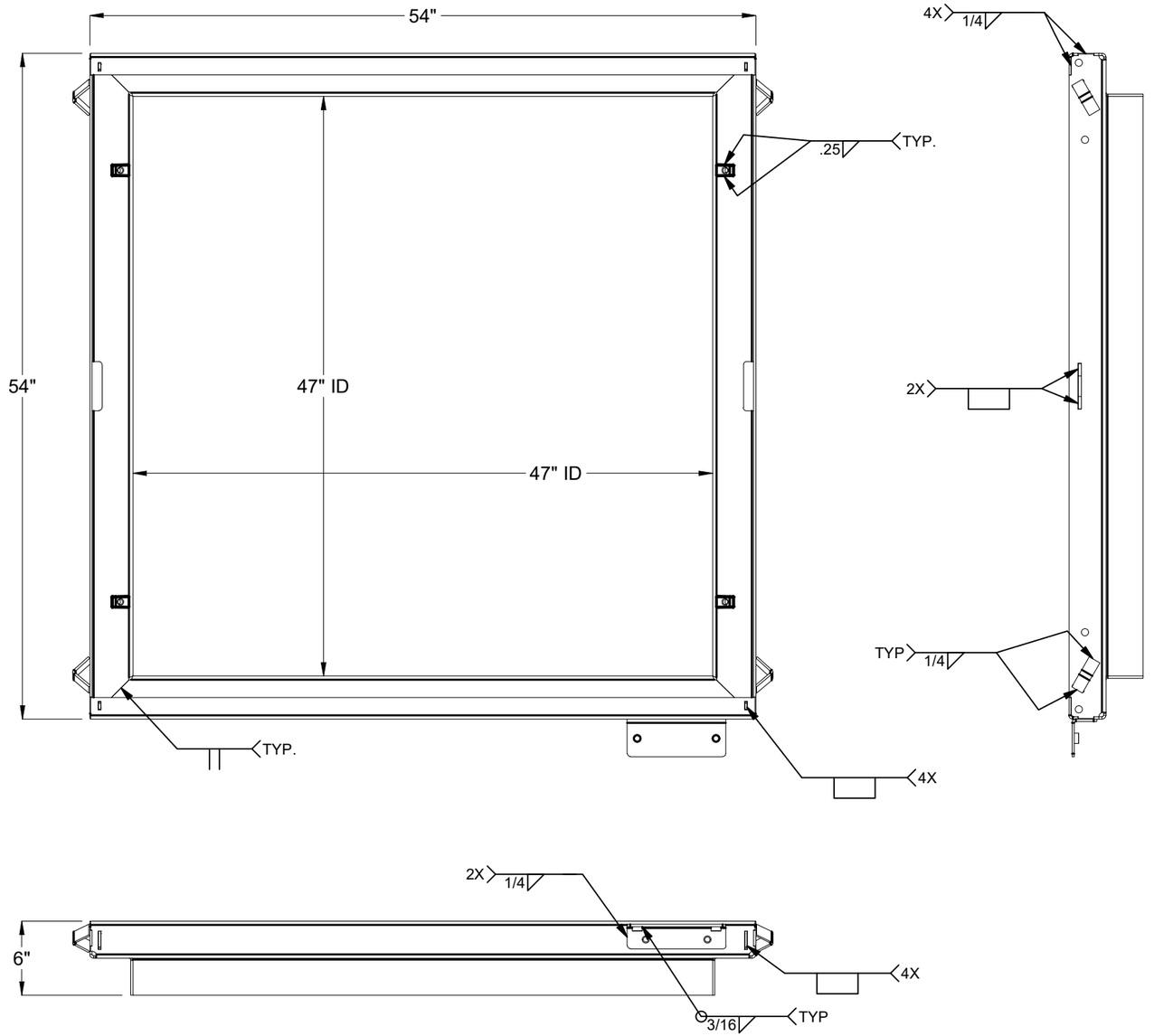

100001502.idw

MATERIAL FINISH: Raw	Infrastructure JENSEN 527 Dunn Circle, Sparks, NV 89431 775-352-2716 FAX: 755-358-8127 *JENSENMETALTECH.COM*	©2026 Jensen Infrastructure - All rights reserved. All materials appearing as Jensen Infrastructure documents and the like are proprietary work product and are protected under U.S. copyright and other laws. Unless in conjunction with business conducted with Jensen Infrastructure , any use of Jensen Infrastructure work product without express, written consent is prohibited, and recipient is prohibited from distributing any and all work product to non-approved third parties under penalty of civil action. This product shall only be produced in a Jensen Infrastructure facility.	PART NUMBER & DESCRIPTION: 200035873 FAS-4848-AH-R-OH06 / REV: E
MATERIAL SURFACE: Smooth			WEIGHT: 140 Lbs / DRAWN BY: CNation / SHEET: 6
			CREATED: 2/10/2020 / MODIFIED: 3/25/2026

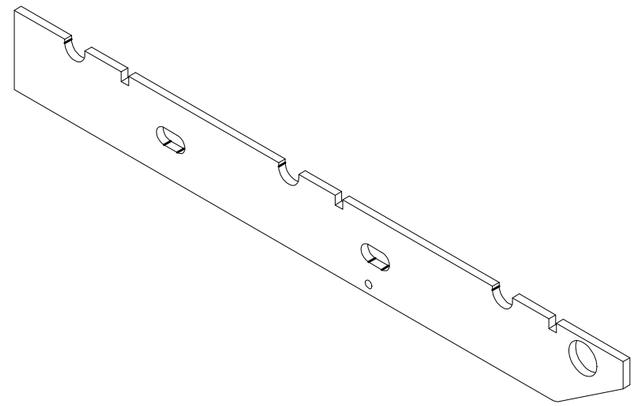

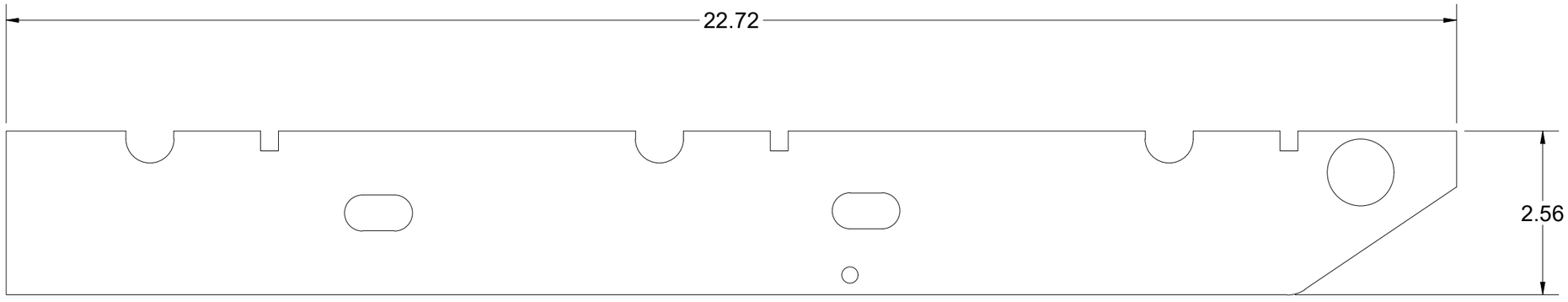

BEND TABLE			
BEND RADIUS	V-OPENING	BEND ANGLE	BEND DEDUCTION
-	-	-	-

MATERIAL IFS: 100007735

MATERIAL THK: 0.25

MAT DESCRIPTION: STL ASTM A36 SM-HRPO RAW .250

Infrastructure
JENSEN
527 Dunn Circle, Sparks, NV 89431
775-352-2716 FAX: 755-358-8127
JENSENMETALTECH.COM

©2026 Jensen Infrastructure - All rights reserved.
All materials appearing as Jensen Infrastructure documents and the like are proprietary work product and are protected under U.S. copyright and other laws. Unless in conjunction with business conducted with Jensen Infrastructure , any use of Jensen Infrastructure work product without express, written consent is prohibited, and recipient is prohibited from distributing any and all work product to non-approved third parties under penalty of civil action.
This product shall only be produced in a Jensen Infrastructure facility.

NAME & DESCRIPTION: 200035867
Door Component Steel Side Bar

REV: E

WEIGHT: 3.759 lbmass

DRAWN BY: CNation

CREATED: 2/10/2020

MODIFIED: 3/25/2026

SHEET: 7 OF 13

100001502.idw

ASYMMETRIC

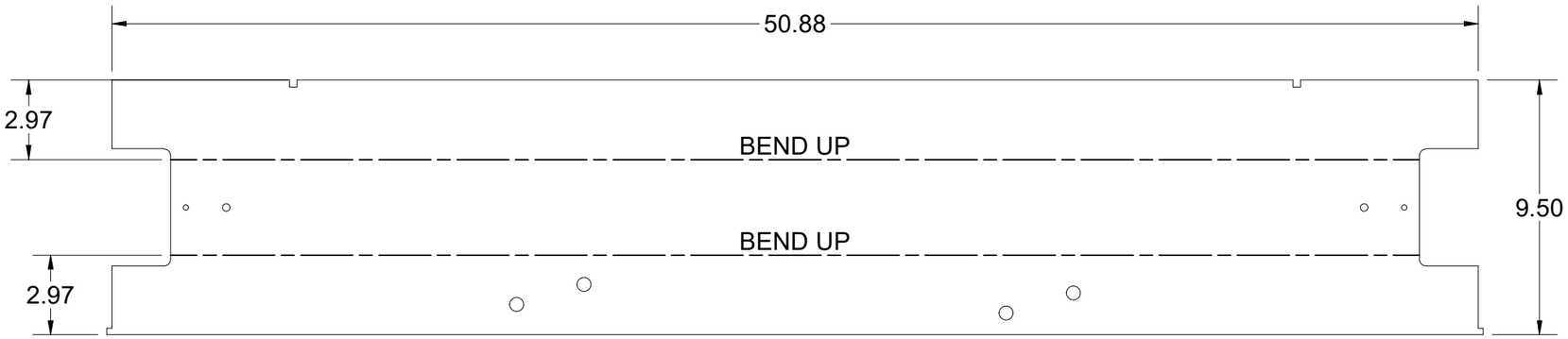

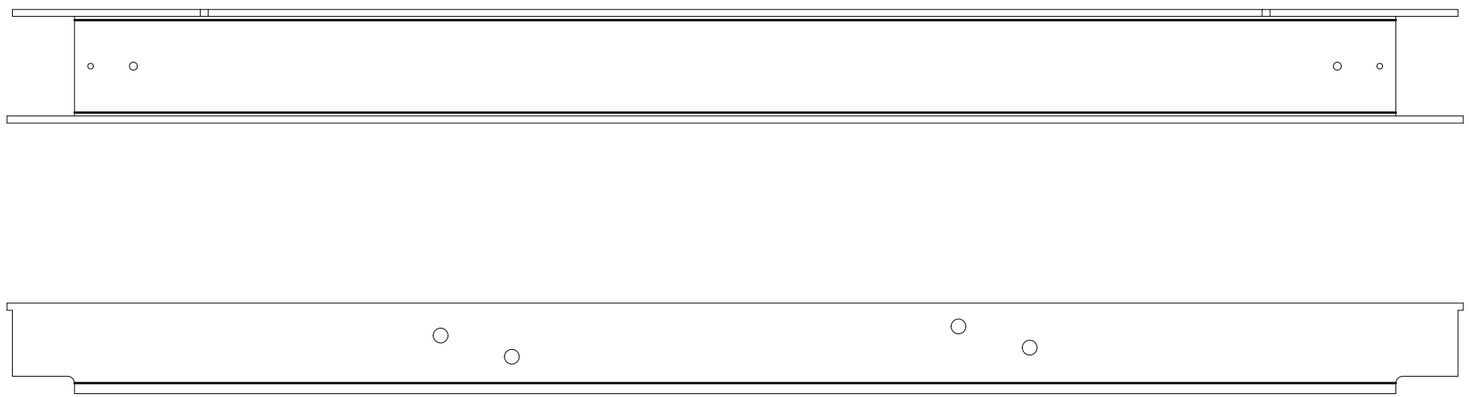

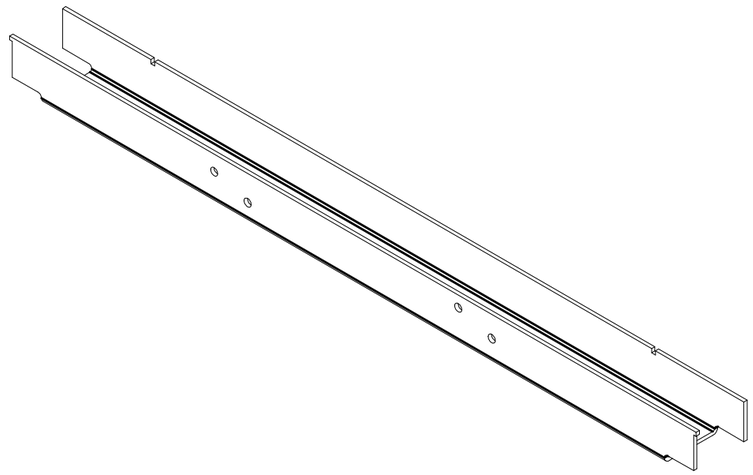

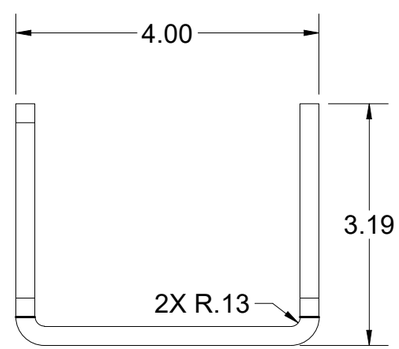

BEND TABLE				MATERIAL IFS: 100007735
BEND RADIUS	V-OPENING	BEND ANGLE	BEND DEDUCTION	MATERIAL THK: 0.25
0.125	2	90	0.440	MAT DESCRIPTION: STL ASTM A36 SM-HRPO RAW .250

Infrastructure JENSEN
527 Dunn Circle, Sparks, NV 89431
775-352-2716 FAX: 755-358-8127
JENSENMETALTECH.COM

©2026 Jensen Infrastructure - All rights reserved. All materials appearing as Jensen Infrastructure documents and the like are proprietary work product and are protected under U.S. copyright and other laws. Unless in conjunction with business conducted with Jensen Infrastructure , any use of Jensen Infrastructure work product without express, written consent is prohibited, and recipient is prohibited from distributing any and all work product to non-approved third parties under penalty of civil action. This product shall only be produced in a Jensen Infrastructure facility.

NAME & DESCRIPTION:	200035868 Door Component Steel Channel		REV:
WEIGHT: 33.410 lbmass		DRAWN BY: CNation	SHEET: 8 OF 13
CREATED: 2/10/2020		MODIFIED: 3/25/2026	

100001502.idw

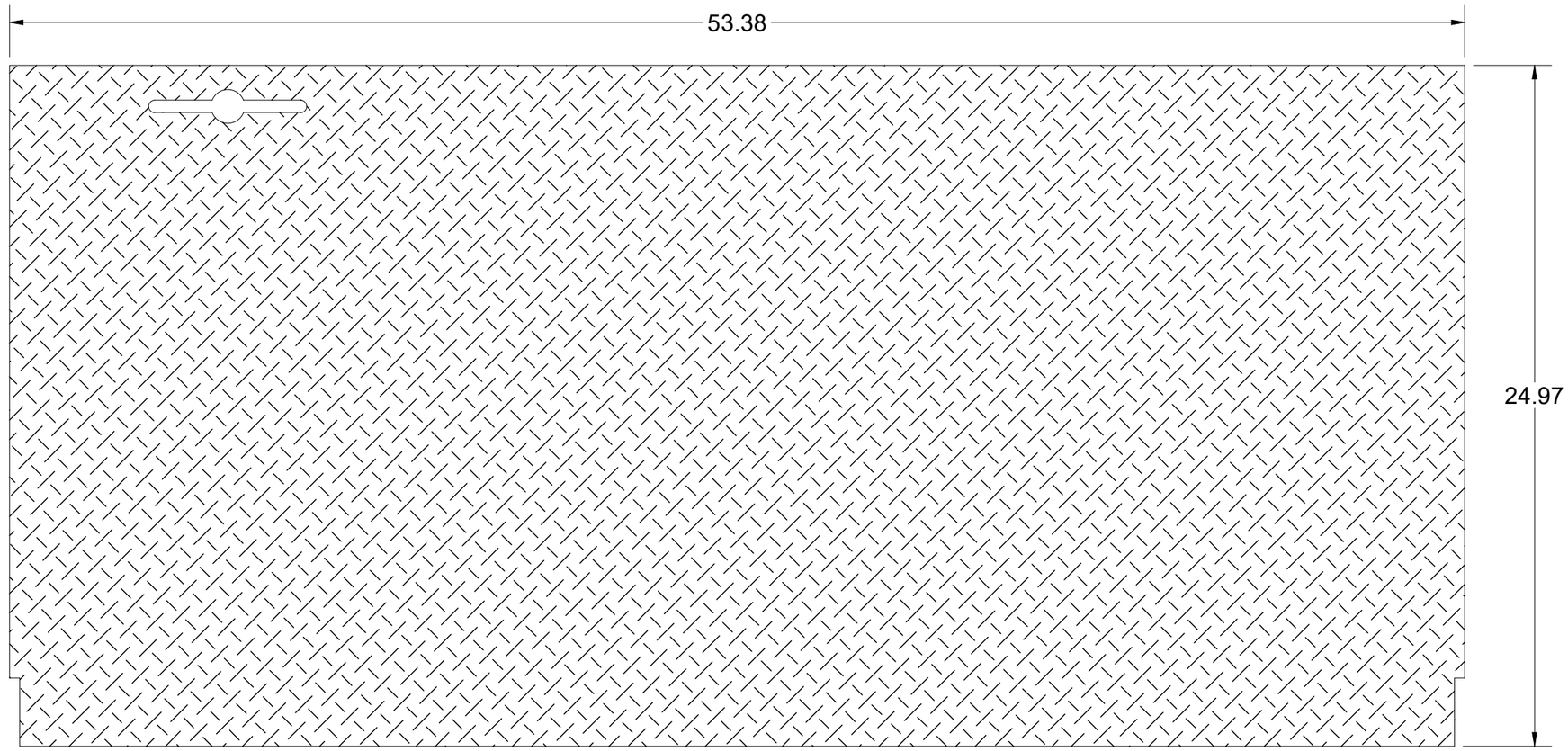

100001502.idw

BEND TABLE				MATERIAL IFS: 100007736			
BEND RADIUS	V-OPENING	BEND ANGLE	BEND DEDUCTION	MATERIAL THK: 0.25			
-	-	- 0	-	MAT DESCRIPTION: SHT STL CQ DP RAW .25 - 36 KSI YIELD			

Infrastructure
JENSEN
527 Dunn Circle, Sparks, NV 89431
775-352-2716 FAX: 755-358-8127
JENSENMETALTECH.COM

©2026 Jensen Infrastructure - All rights reserved.
All materials appearing as Jensen Infrastructure documents and the like are proprietary work product and are protected under U.S. copyright and other laws. Unless in conjunction with business conducted with Jensen Infrastructure , any use of Jensen Infrastructure work product without express, written consent is prohibited, and recipient is prohibited from distributing any and all work product to non-approved third parties under penalty of civil action.
This product shall only be produced in a Jensen Infrastructure facility.

NAME & DESCRIPTION: 200035869 Door Component Steel Plate, Bottom		REV: E
WEIGHT: 103.818 lbmass	DRAWN BY: CNation	SHEET: 9 OF 13
CREATED: 2/10/2020	MODIFIED: 3/25/2026	

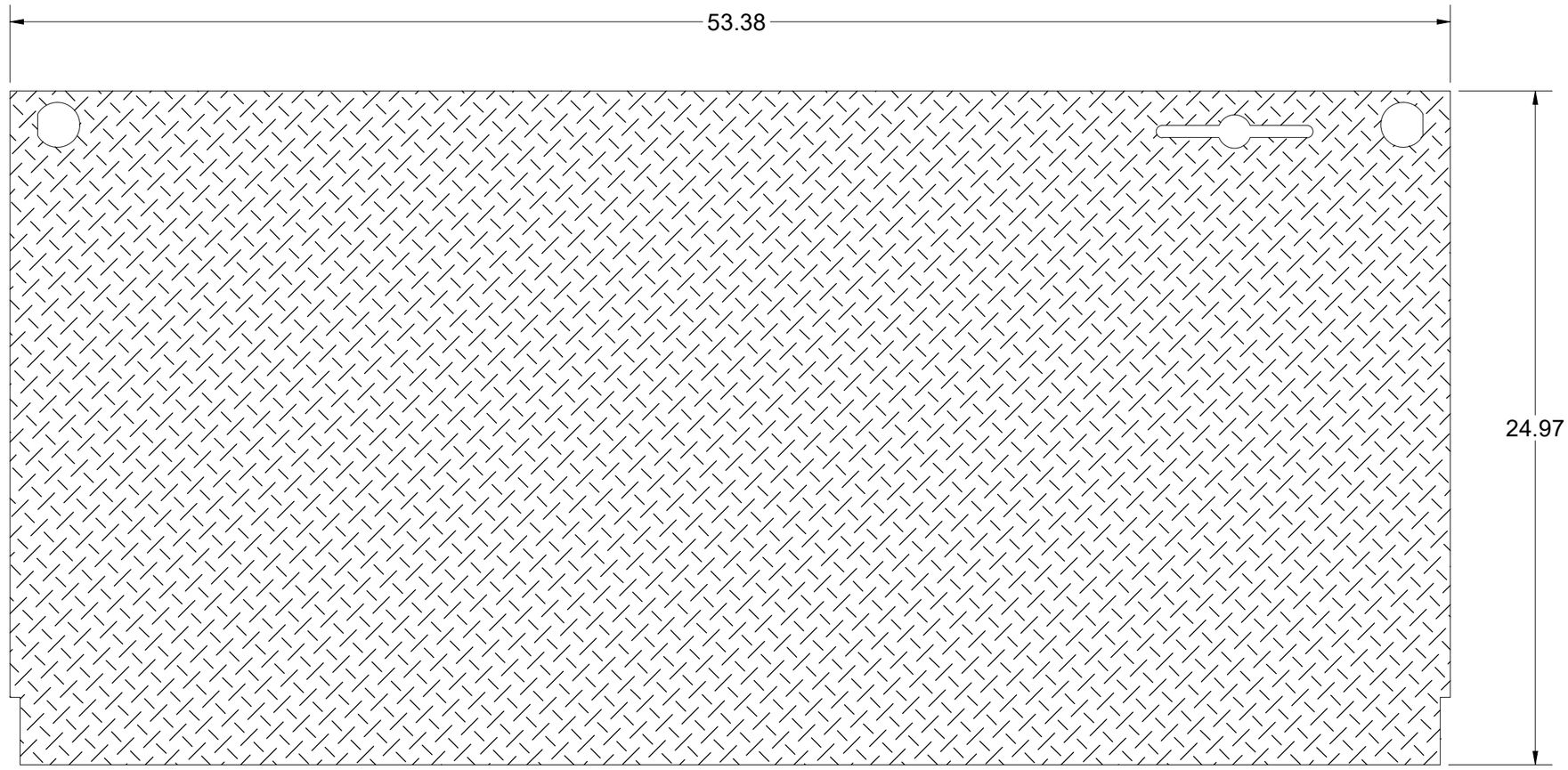

100001502.idw

BEND TABLE			
BEND RADIUS	V-OPENING	BEND ANGLE	BEND DEDUCTION
-	-	- 0	-

MATERIAL IFS: 100007736

MATERIAL THK: 0.25

MAT DESCRIPTION: SHT STL CQ DP RAW .25 - 36 KSI YIELD

Infrastructure
JENSEN
527 Dunn Circle, Sparks, NV 89431
775-352-2716 FAX: 755-358-8127
JENSENMETALTECH.COM

©2026 Jensen Infrastructure - All rights reserved.
All materials appearing as Jensen Infrastructure documents and the like are proprietary work product and are protected under U.S. copyright and other laws. Unless in conjunction with business conducted with Jensen Infrastructure , any use of Jensen Infrastructure work product without express, written consent is prohibited, and recipient is prohibited from distributing any and all work product to non-approved third parties under penalty of civil action.
This product shall only be produced in a Jensen Infrastructure facility.

NAME & DESCRIPTION: 200035872
Door Component Steel Plate, Top

REV: E

WEIGHT: 103.487 lbmass

DRAWN BY: CNation

CREATED: 2/10/2020

MODIFIED: 3/25/2026

SHEET: 10 OF 13

ASYMMETRIC

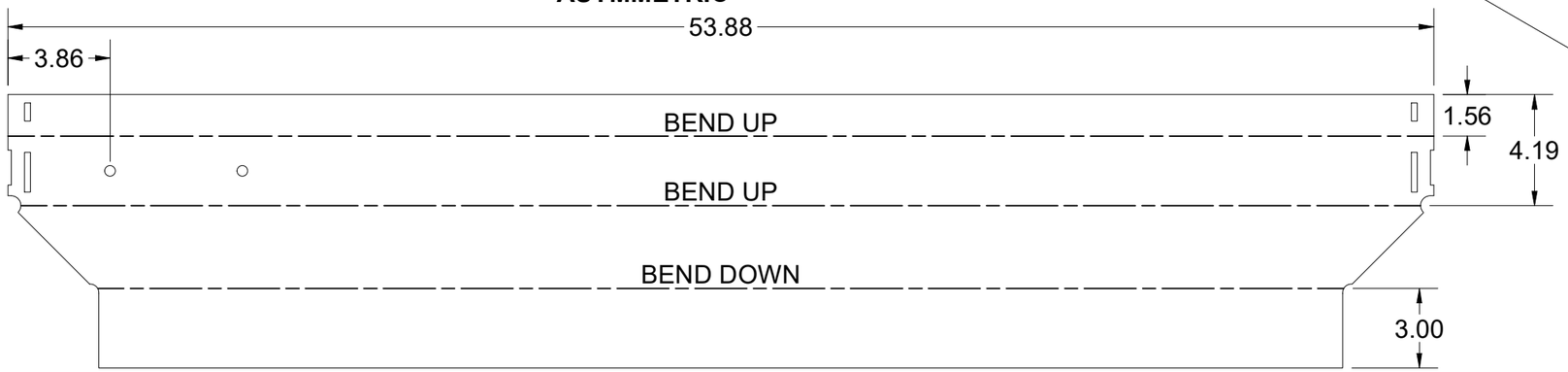

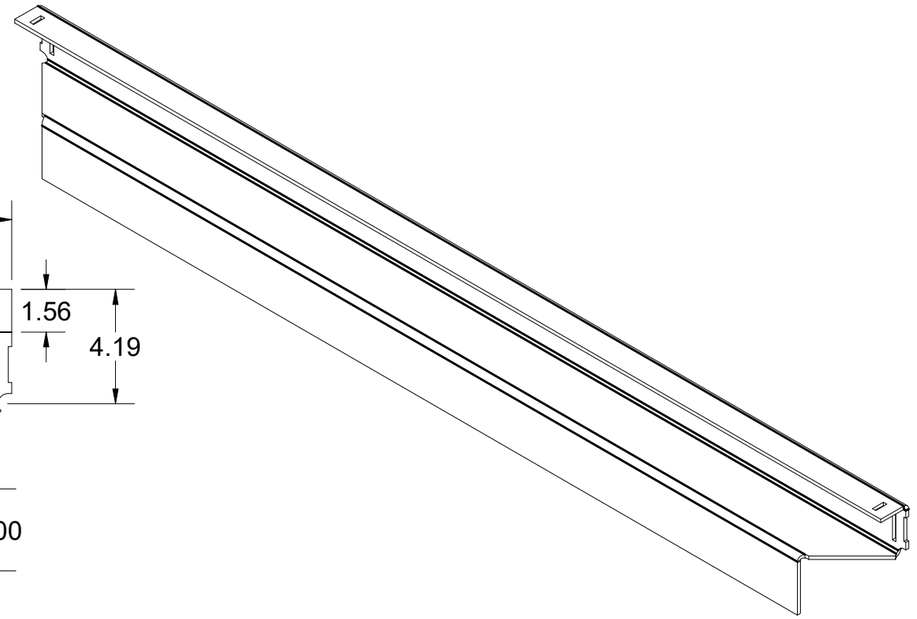

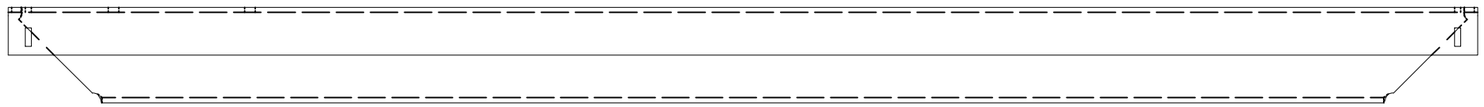

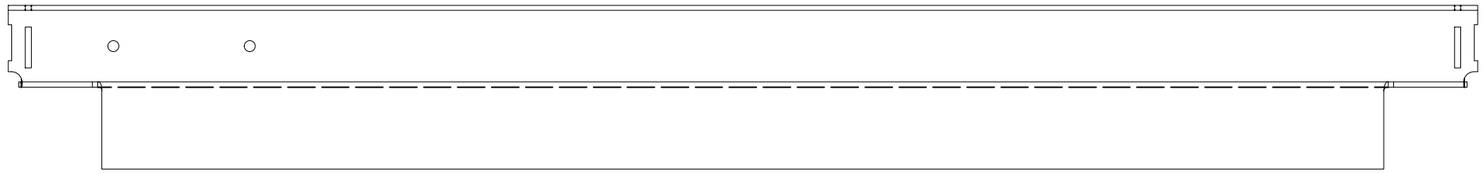

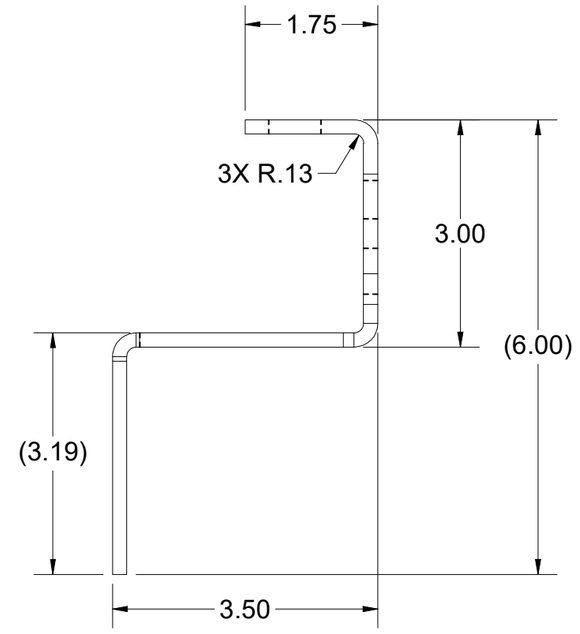

BEND TABLE			
BEND RADIUS	V-OPENING	BEND ANGLE	BEND DEDUCTION
0.125	2	90	0.375

MATERIAL IFS: 100007734

MATERIAL THK: 0.1875

MAT DESCRIPTION: STL ASTM A36 SM-HRPO 60X120 RAW .1875

Infrastructure JENSEN

527 Dunn Circle, Sparks, NV 89431
775-352-2716 FAX: 755-358-8127
JENSENMETALTECH.COM

©2026 Jensen Infrastructure - All rights reserved. All materials appearing as Jensen Infrastructure documents and the like are proprietary work product and are protected under U.S. copyright and other laws. Unless in conjunction with business conducted with Jensen Infrastructure , any use of Jensen Infrastructure work product without express, written consent is prohibited, and recipient is prohibited from distributing any and all work product to non-approved third parties under penalty of civil action. This product shall only be produced in a Jensen Infrastructure facility.

NAME & DESCRIPTION: 200035874 Frame Component Steel Frame End, Adjustable

REV: E

WEIGHT: 28.545 lbmass

DRAWN BY: CNation

CREATED: 2/10/2020

MODIFIED: 3/25/2026

SHEET: 11 OF 13

100001502.idw

SYMMETRIC

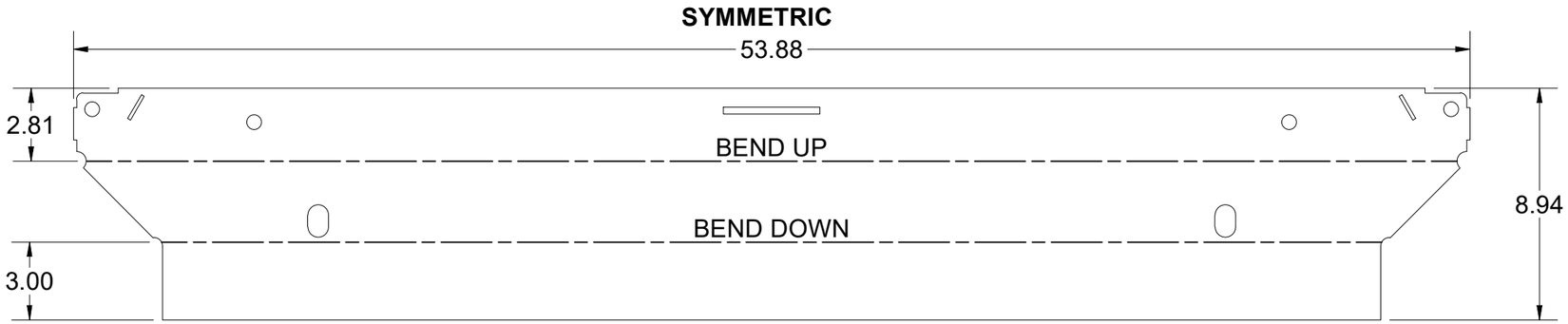

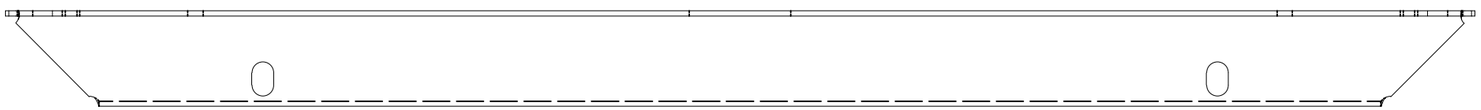

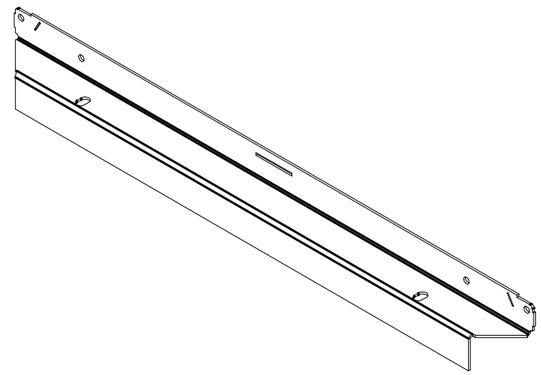

100001502.idw

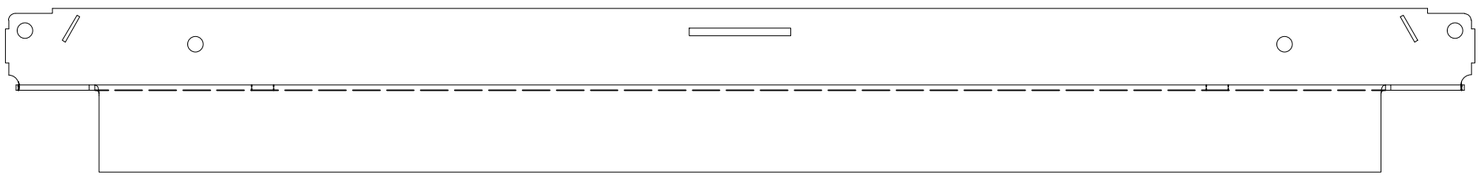

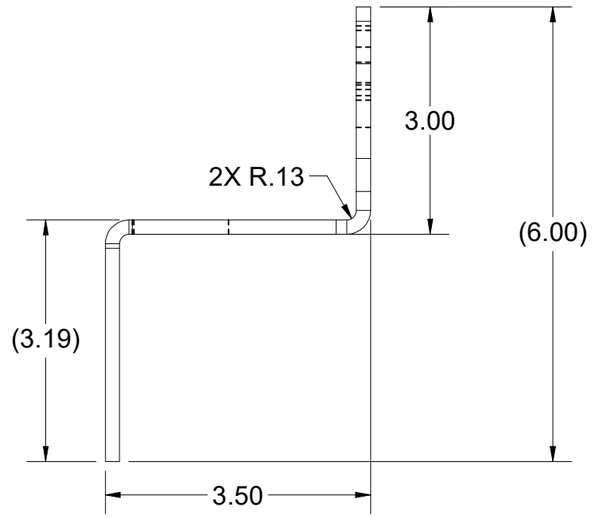

BEND TABLE				MATERIAL IFS: 100007734
BEND RADIUS	V-OPENING	BEND ANGLE	BEND DEDUCTION	MATERIAL THK: 0.1875
0.125	2	90	0.375	MAT DESCRIPTION: STL ASTM A36 SM-HRPO 60X120 RAW .1875

Infrastructure JENSEN

527 Dunn Circle, Sparks, NV 89431
775-352-2716 FAX: 755-358-8127
JENSENMETALTECH.COM

©2026 Jensen Infrastructure - All rights reserved.
All materials appearing as Jensen Infrastructure documents and the like are proprietary work product and are protected under U.S. copyright and other laws. Unless in conjunction with business conducted with Jensen Infrastructure , any use of Jensen Infrastructure work product without express, written consent is prohibited, and recipient is prohibited from distributing any and all work product to non-approved third parties under penalty of civil action.
This product shall only be produced in a Jensen Infrastructure facility.

NAME & DESCRIPTION: 200035875 Frame Component Steel Frame Side, Adjustable		REV: E
WEIGHT: 24.158 lbmass	DRAWN BY: CNation	SHEET: 12 OF 13
CREATED: 2/10/2020	MODIFIED: 3/25/2026	

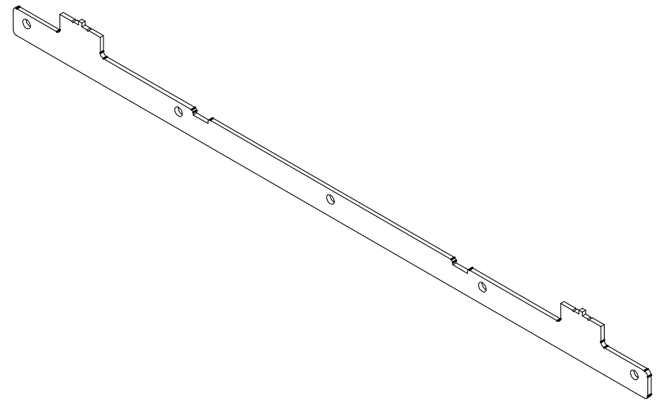

100001502.idw

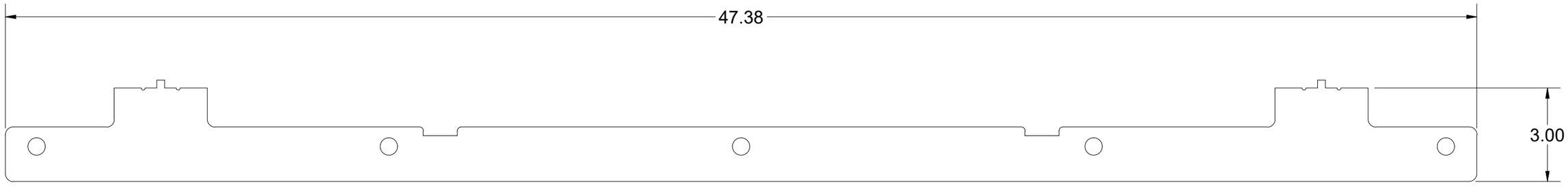

BEND TABLE				MATERIAL IFS: 100007735
BEND RADIUS	V-OPENING	BEND ANGLE	BEND DEDUCTION	MATERIAL THK: 0.25
-	-	-	-	MAT DESCRIPTION: STL ASTM A36 SM-HRPO RAW .250

Infrastructure
JENSEN
527 Dunn Circle, Sparks, NV 89431
775-352-2716 FAX: 755-358-8127
JENSENMETALTECH.COM

©2026 Jensen Infrastructure - All rights reserved.
All materials appearing as Jensen Infrastructure documents and the like are proprietary work product and are protected under U.S. copyright and other laws. Unless in conjunction with business conducted with Jensen Infrastructure , any use of Jensen Infrastructure work product without express, written consent is prohibited, and recipient is prohibited from distributing any and all work product to non-approved third parties under penalty of civil action.
This product shall only be produced in a Jensen Infrastructure facility.

NAME & DESCRIPTION:	200087252 Door Component Steel Lap Bar 48in, 2.5" Stiffener Offset		REV: E
WEIGHT: 6.293 lbmass		DRAWN BY: CNation	SHEET: 13 OF 13
CREATED: 2/10/2020		MODIFIED: 3/25/2026	