NOTES
■ FOR COMPLETE DESIGN AND PRODUCT INFORMATION CONTACT JENSEN PRECAST.

BILL OF MATERIALS

ITEM	UNIT QTY	QTY	PART NUMBER	DESCRIPTION
1	37.806 ft^3	37.806 ft^3	100011425	CONCRETE MIX GENERIC 5000 PSI
2	1	6	100001044	BARRIER END LOOPS TYPE F GALV
3	1	1	100018735	REINFORCING MAT 100018735
4	7.500 in	30.000 in	100003327	PIPE PVC SCH 40 1.250IN DIA

100001487.idw

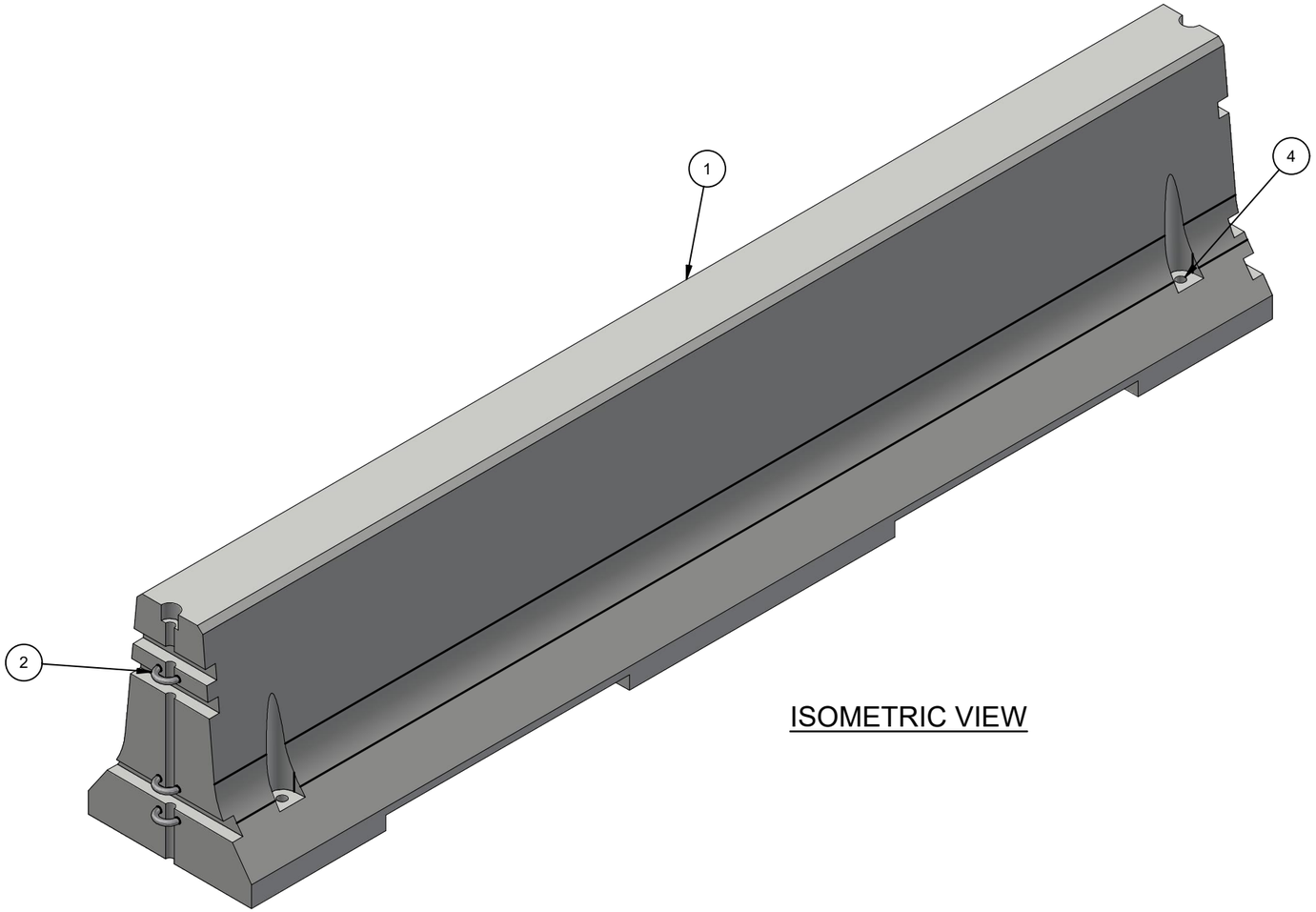

ISOMETRIC VIEW

CHANGE HISTORY			
REV	DESCRIPTION	DATE	BY
A	DRAWING CREATED	3/16/2021	BGD
B	SYNC WITH IFS REV	5/5/2021	BGD

BURY DEPTH:	Above Ground to N/A		
WATER LEVEL:	Agency Specified	APPROX. WEIGHT:	5740.63 Lbs
DESIGN SPEC:	Agency Specified	LOADING SPEC:	Agency Specified
REINFORCEMENT TYPE:	Rebar	LIFTING TYPE:	None

JENSEN PRECAST EST. 1968

WWW.JENSENPRECAST.COM

©2021 Jensen Precast- All rights reserved.
All materials appearing as Jensen Precast documents and the like are proprietary work product and are protected under U.S. copyright and other laws.
Unless in conjunction with business conducted with Jensen Precast, any use of Jensen Precast work product without express, written consent is prohibited, and recipient is prohibited from distributing any and all work product to non-approved third parties under penalty of civil action.

DESCRIPTION:	Barrier Rail 12'-6" Type F NDOT RB-47 CASTING LAYOUT		REV: B-2
PART NUMBER:	100001487	DRAWN BY:	B. Gentry-Dunn
CREATED:	3/16/2021	MODIFIED:	5/12/2021
			SHEET: 1 OF 2

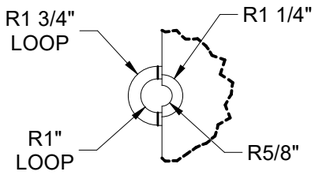

DETAIL A

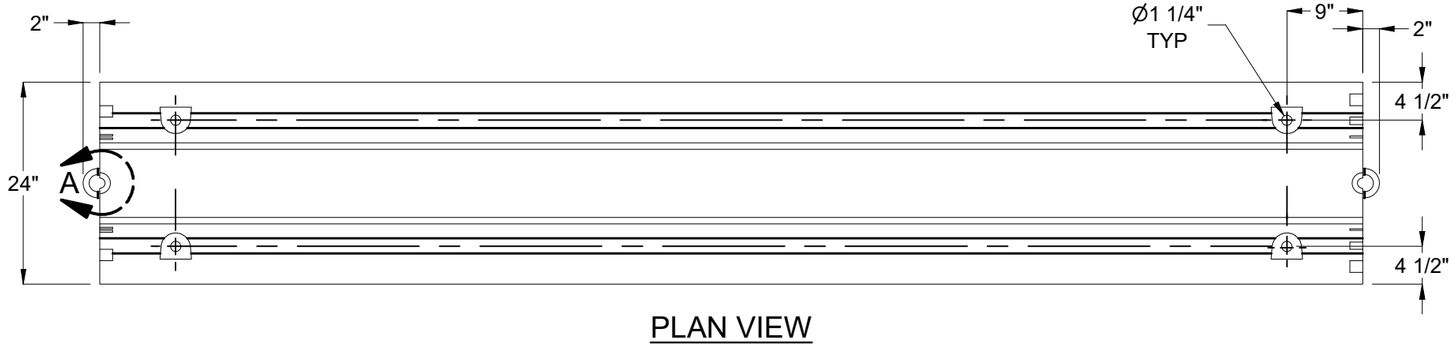

PLAN VIEW

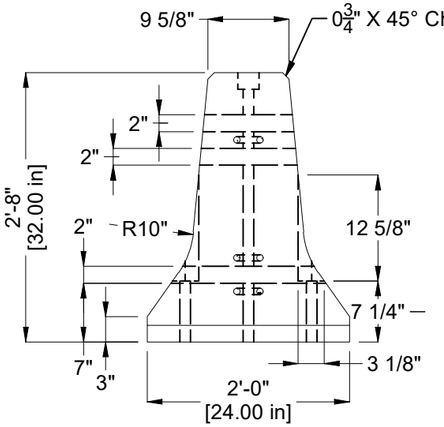

SECTION A-A

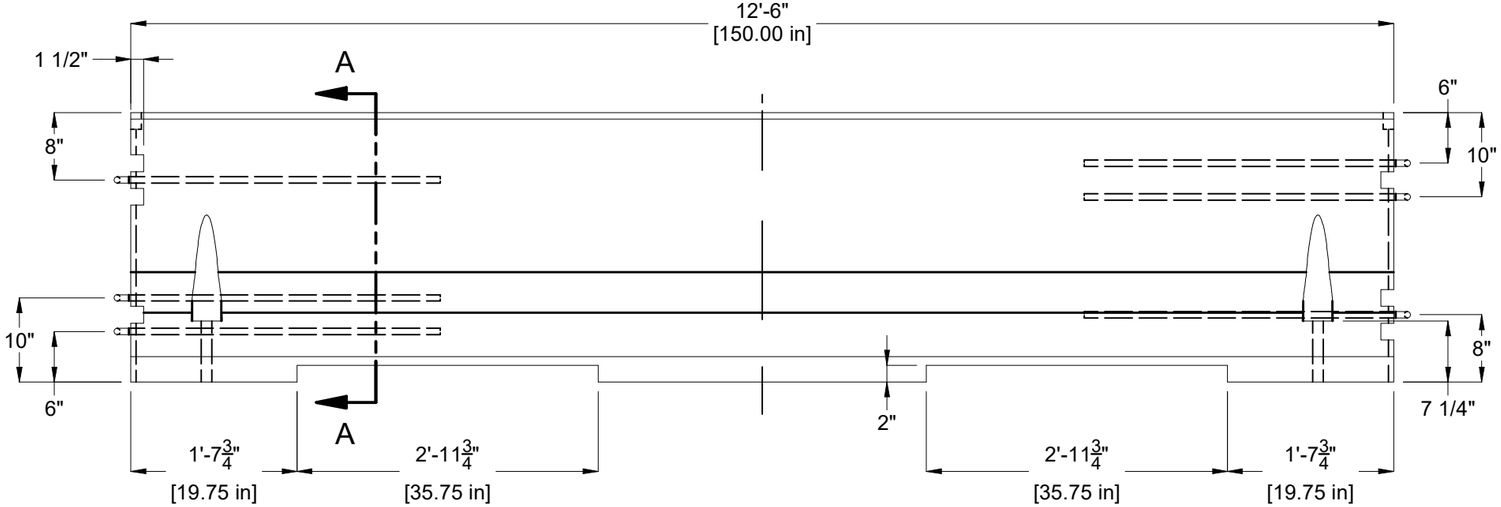

ELEVATION VIEW

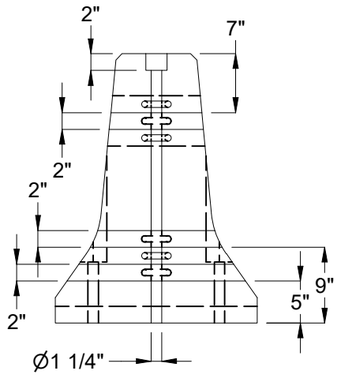

END VIEW

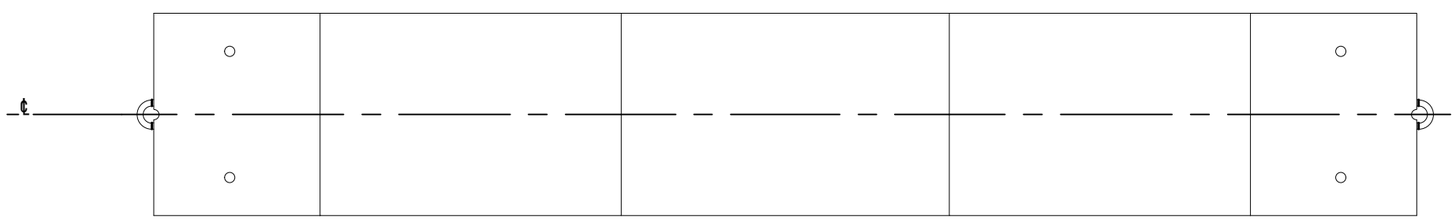

BOTTOM VIEW

BURY DEPTH:	Above Ground to N/A		
WATER LEVEL:	Agency Specified	APPROX. WEIGHT:	5740.63 Lbs
DESIGN SPEC:	Agency Specified	LOADING SPEC:	Agency Specified
REINFORCEMENT TYPE:	Rebar	LIFTING TYPE:	None

JENSEN PRECAST EST. 1968

WWW.JENSENPRECAST.COM

©2021 Jensen Precast- All rights reserved.
All materials appearing as Jensen Precast documents and the like are proprietary work product and are protected under U.S. copyright and other laws.
Unless in conjunction with business conducted with Jensen Precast, any use of Jensen Precast work product without express, written consent is prohibited, and recipient is prohibited from distributing any and all work product to non-approved third parties under penalty of civil action.

DESCRIPTION:	Barrier Rail 12'-6" Type F NDOT RB-47 CASTING DRAWING		REV: B-2
PART NUMBER:	100001487	DRAWN BY:	B. Gentry-Dunn
CREATED:	3/16/2021	MODIFIED:	5/12/2021
			SHEET: 2 OF 2

100001487.idw