NOTES
■ FOR COMPLETE DESIGN AND PRODUCT INFORMATION CONTACT JENSEN PRECAST.

BILL OF MATERIALS

ITEM	QTY	PART NUMBER	DESCRIPTION
1	39.773 ft^3	100011425	CONCRETE MIX 5000 PSI
2	1	200064567	REINFORCING MAT 200064567
3	4	100002874	ANCHOR DOGBONE P52 4T X 4-3/4" GALV
4	1	300150286	REINFORCING MAT 300150286
5	2.000 gal	100042909	COATING WATERPROOFING BG2000 MULTICOAT

ALTERNATVE WWR REINFORCING OPTION	
PART NUMBER	DESCRIPTION
200090571	REINFORCING MAT 200090571
200090572	REINFORCING MAT 200090572

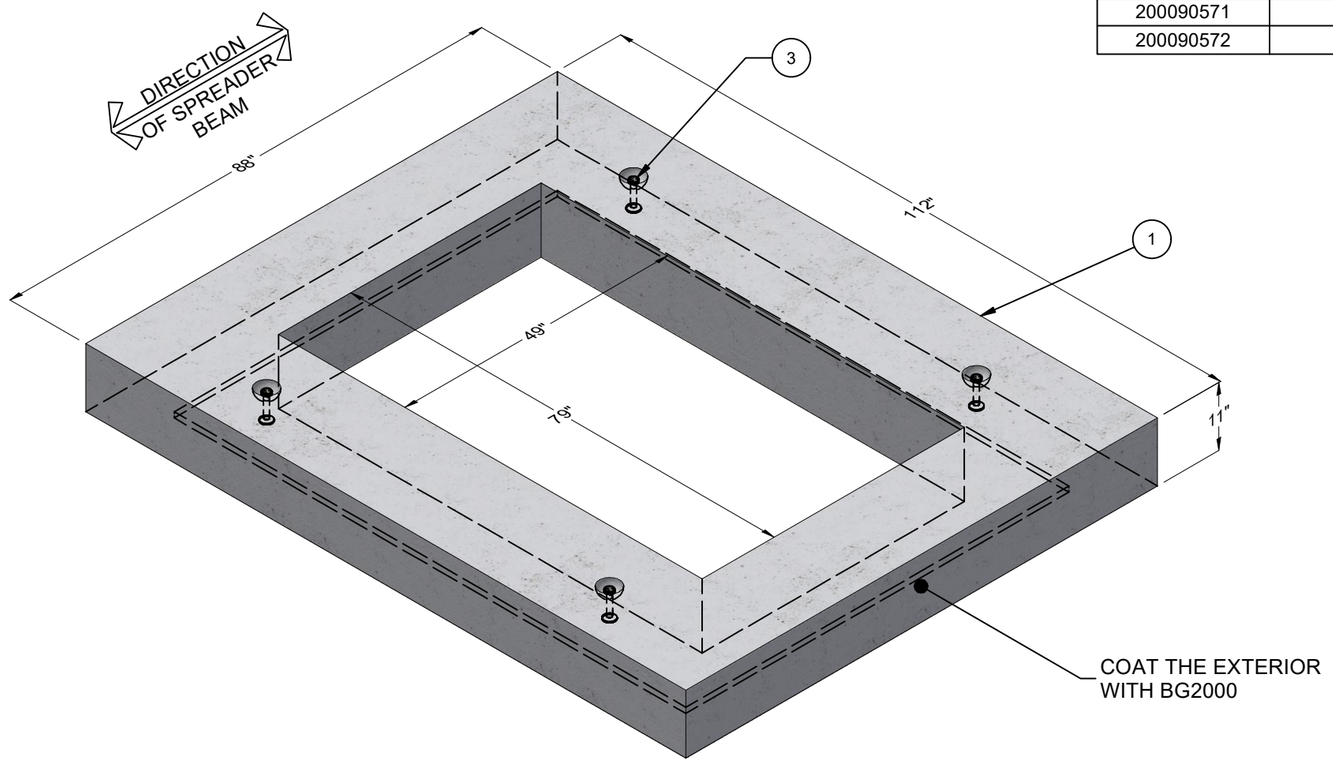

ISO LAYOUT

LIFTING NOTES
■ INSTALLATION: THIS CONCRETE PRODUCT IS DESIGNED TO BE LIFTED AT 5000 PSI WITH 4 LIFT CONNECTIONS EQUALLY LOADED TO 2 LIFTING POINTS AT A MINIMUM 70° SLING ANGLE, MEASURED FROM HORIZONTAL.
■ DEMOLDING: THIS CONCRETE PRODUCT IS DESIGNED TO BE LIFTED AT 2500 PSI WITH 4 LIFT CONNECTIONS EQUALLY LOADED TO 4 LIFTING POINTS AT A MINIMUM 60° SLING ANGLE, MEASURED FROM HORIZONTAL.
*All rigging shall be design by a qualified professional. Loading diagrams show illustrations of possible rigging setups to achieve the required sling angle and load leg equalization. Other valid rigging configurations are possible. A qualified professional must be consulted prior to lifting.

RIGGING DIAGRAMS*

INSTALLATION	B	DEMOLDING	C

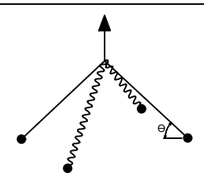

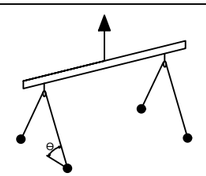

BURY DEPTH:	0.0' - 1.0' Ft. to Top		
WATER LEVEL:	Below Structure	WEIGHT:	5998.82 Lbs
DESIGN SPEC:	ACI 318,ASTM C857	LOADING SPEC:	A-16 (AASHTO HS20-44)
REINFORCEMENT TYPE:	Rebar	LIFTING TYPE:	Dogbone

JENSEN PRECAST EST. 1968

WWW.JENSENPRECAST.COM

©2023 Jensen Precast- All rights reserved.
All materials appearing as Jensen Precast documents and the like are proprietary work product and are protected under U.S. copyright and other laws.
Unless in conjunction with business conducted with Jensen Precast, any use of Jensen Precast work product without express, written consent is prohibited, and recipient is prohibited from distributing any and all work product to non-approved third parties under penalty of civil action.

CHANGE HISTORY

NO.	DESCRIPTION	DATE	BY
B-3	2204-52667	5-12-22	DCH
B-3	BG2000 100042909	8-15-2023	EDC
C-1	UPDATED INSTALLATION NOTES	12-04-2023	EDC
C-1	LIFTING UPDATES, ALTERNATIVE WWR OPTION	10-10-2024	RM

DESCRIPTION: Vault 7296x12 Slab Top 49"x79"C TMWA Ext. Coating - Multicoat BG2000			REV: C-1
CASTING LAYOUT			SHEET: 1 OF 2
PART NUMBER:	100001466	DRAWN BY:	E CAMERON
CREATED:	5/12/2022	MODIFIED:	10/10/2024

100001466.idw

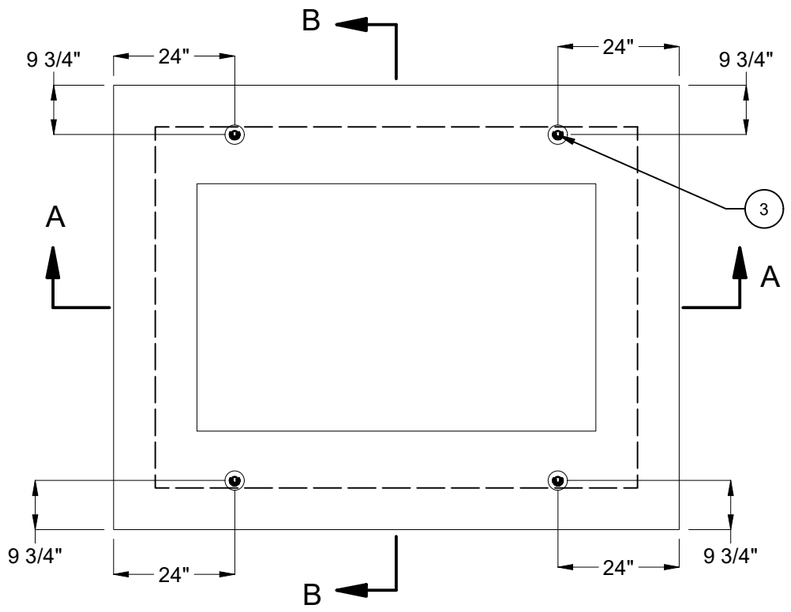

PLAN VIEW

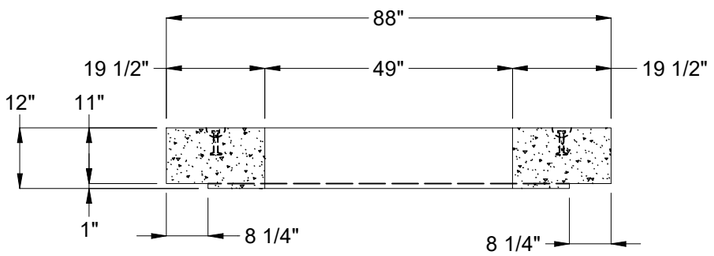

SECTION B-B

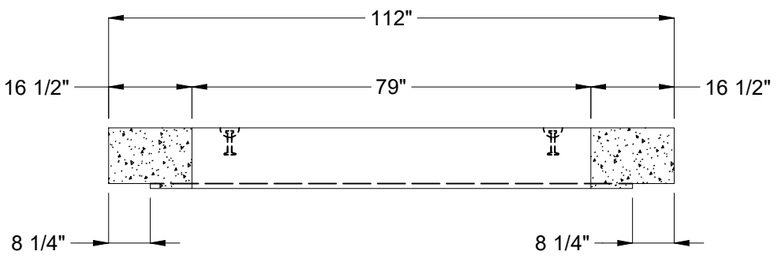

SECTION A-A

BURY DEPTH:	0.0' - 1.0' Ft. to Top		
WATER LEVEL:	Below Structure	WEIGHT:	5998.82 Lbs
DESIGN SPEC:	ACI 318,ASTM C857	LOADING SPEC:	A-16 (AASHTO HS20-44)
REINFORCEMENT TYPE:	Rebar	LIFTING TYPE:	Dogbone

JENSEN PRECAST EST. 1968

WWW.JENSENPRECAST.COM

©2023 Jensen Precast- All rights reserved.
All materials appearing as Jensen Precast documents and the like are proprietary work product and are protected under U.S. copyright and other laws.
Unless in conjunction with business conducted with Jensen Precast, any use of Jensen Precast work product without express, written consent is prohibited, and recipient is prohibited from distributing any and all work product to non-approved third parties under penalty of civil action.

DESCRIPTION:	Vault 7296x12 Slab Top 49"x79"C TMWA Ext. Coating - Multicoat BG2000 CASTING DRAWING		REV: C-1
PART NUMBER:	100001466	DRAWN BY:	E CAMERON
CREATED:	5/12/2022	MODIFIED:	10/10/2024

SHEET: 2 OF 2

100001466.idw