NOTES

- FOR COMPLETE DESIGN AND PRODUCT INFORMATION CONTACT JENSEN PRECAST.

BILL OF MATERIALS

ITEM	QTY	PART NUMBER	DESCRIPTION
1	147.336 ft^3	100011425	CONCRETE MIX GENERIC 5000 PSI
2	1	200043788	REINFORCING MAT 200043788
3	8	100002880	ANCHOR DOGBONE P52 8T X 6-3/4" GALV
4	1	100004775	SUMP PAN GRT 13X13 SQUARE POLYLOK
5	9.000 gal	100042909	COATING WATERPROOFING BG2000 MULTICOAT

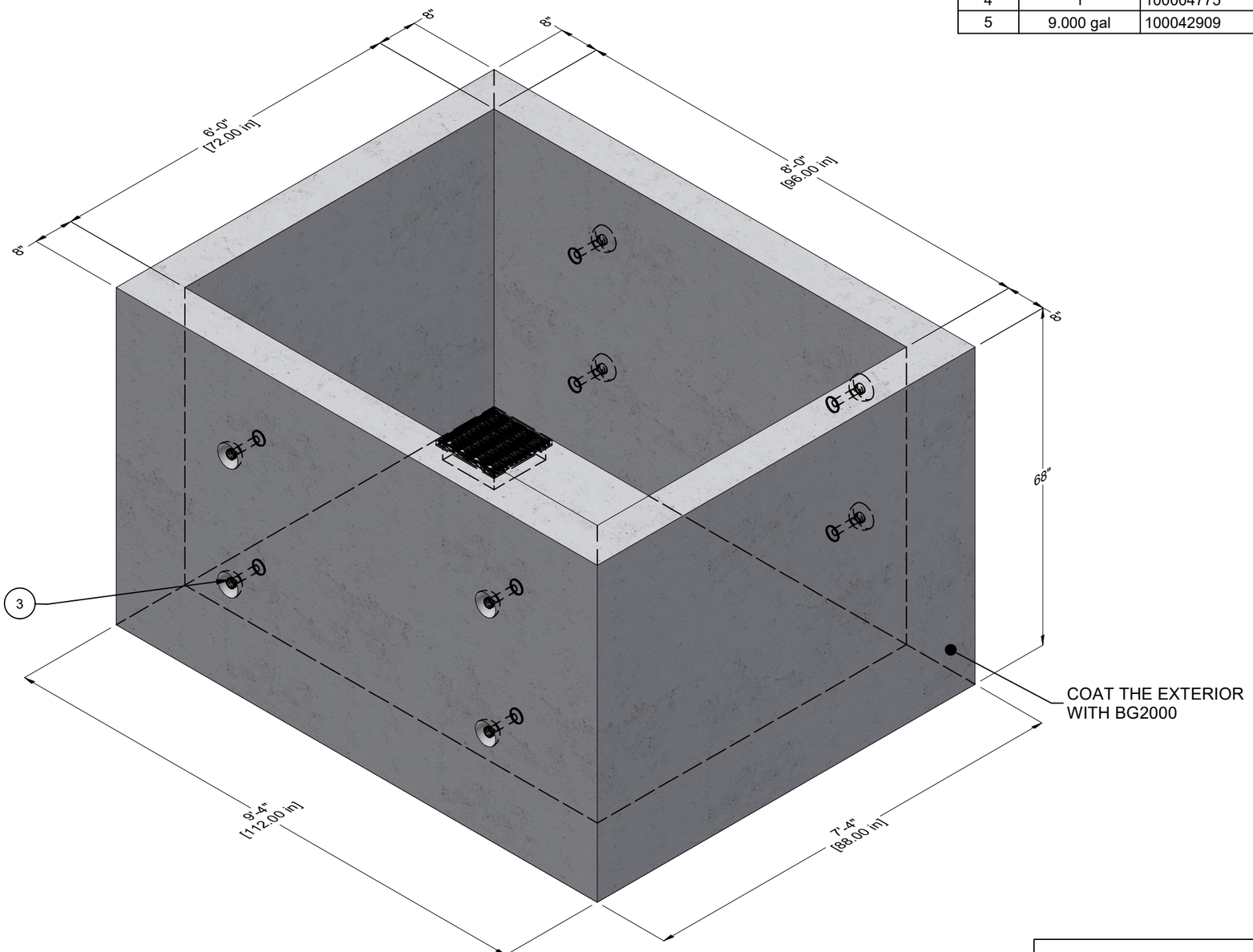

ISO REF

LIFTING NOTES

- THIS CONCRETE PRODUCT IS DESIGNED TO BE LIFTED AT 2500 PSI WITH 4 LIFT CONNECTIONS EQUALLY LOADED TO 4 LIFTING POINTS AT A MINIMUM 90° SLING ANGLE, MEASURED FROM HORIZONTAL.

CHANGE HISTORY

REV	DESCRIPTION	DATE	BY
2	2004-19642-NNV	7-18-22	DCH
3	UPDATED PART No. BG2000 TO 100042909	8-21-23	EDC
4			

BURY DEPTH:	0.0' - 5.9' to Top		
WATER LEVEL:	7.0'	APPROX. WEIGHT:	22234.24 Lbs
DESIGN SPEC:	ASTM C857,ACI 318	LOADING SPEC:	A-16 (AASHTO HS20-44)
REINFORCEMENT TYPE:	Rebar	LIFTING TYPE:	Dogbone

JENSEN PRECAST EST. 1968

WWW.JENSENPRECAST.COM

©2023 Jensen Precast- All rights reserved.
All materials appearing as Jensen Precast documents and the like are proprietary work product and are protected under U.S. copyright and other laws.
Unless in conjunction with business conducted with Jensen Precast, any use of Jensen Precast work product without express, written consent is prohibited, and recipient is prohibited from distributing any and all work product to non-approved third parties under penalty of civil action.

DESCRIPTION: Vault 7296x60 Rect. Bottom Section TMWA Ext. Coating - BG2000 Waterproofing Multicoat

CASTING LAYOUT

PART NUMBER:	100001457	DRAWN BY:	E CAMERON
CREATED:	9/11/2020	MODIFIED:	8/21/2023

REV: C-1

SHEET: 1 OF 2

100001457.idw

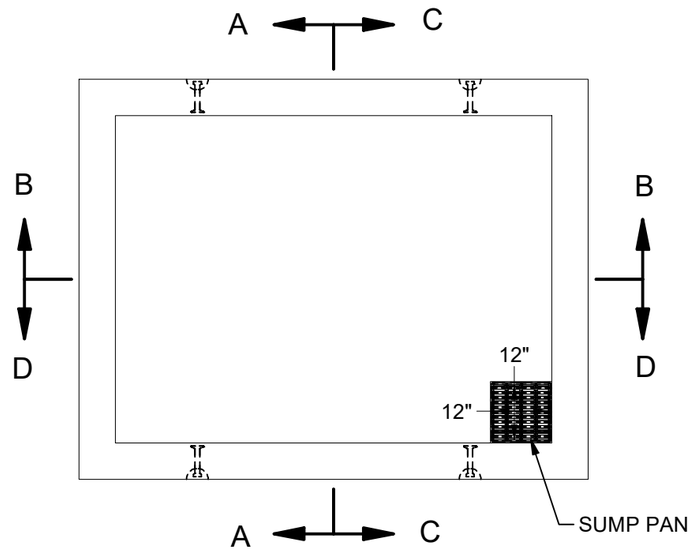

PLAN VIEW

MAXIMUM OF ONE Ø18" HOLE FOR A FULLY GROUTED
RIGID PIPE ALLOWED AT EACH WALL
EACH HOLD MUST BE NO CLOSER
THAN 8" OFF INSIDE WALL CORNER AND ABOVE FLOOR

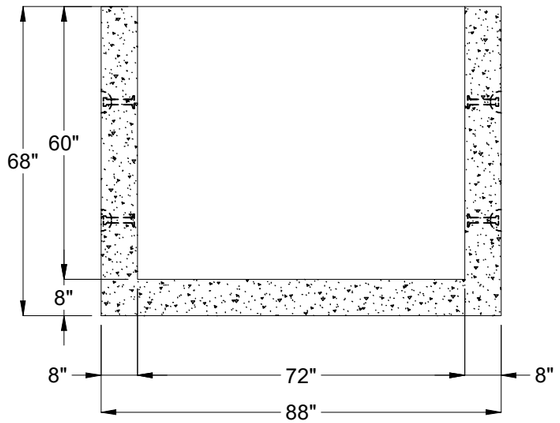

SECTION A-A

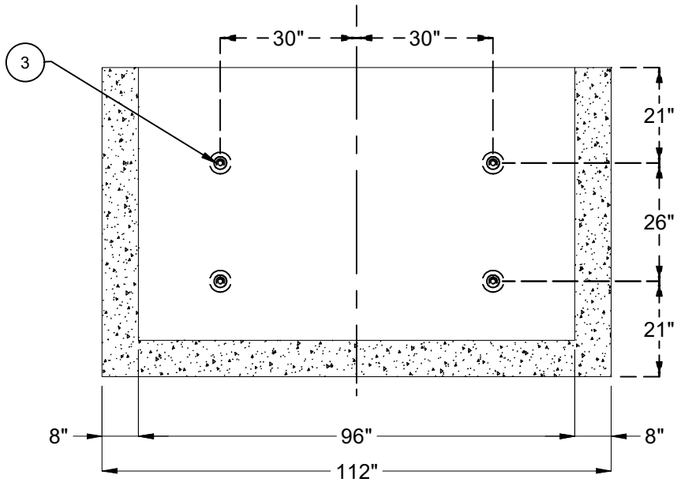

SECTION B-B

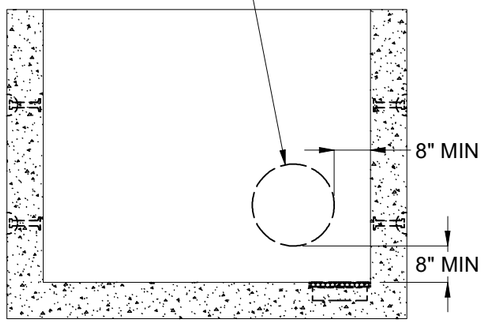

SECTION C-C

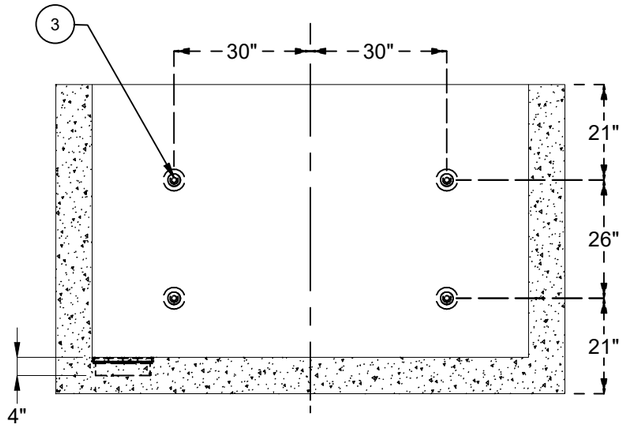

SECTION D-D

BURY DEPTH:	0.0' - 5.9' to Top		
WATER LEVEL:	7.0'	APPROX. WEIGHT:	22234.24 Lbs
DESIGN SPEC:	ASTM C857,ACI 318	LOADING SPEC:	A-16 (AASHTO HS20-44)
REINFORCEMENT TYPE:	Rebar	LIFTING TYPE:	Dogbone

JENSEN PRECAST EST. 1968

WWW.JENSENPRECAST.COM

©2023 Jensen Precast- All rights reserved.
All materials appearing as Jensen Precast documents and the like are proprietary work product and are protected under U.S. copyright and other laws.
Unless in conjunction with business conducted with Jensen Precast, any use of Jensen Precast work product without express, written consent is prohibited, and recipient is prohibited from distributing any and all work product to non-approved third parties under penalty of civil action.

DESCRIPTION:
Vault 7296x60 Rect. Bottom Section TMWA Ext. Coating - BG2000 Waterproofing Multicoat
CASTING DRAWING

REV: C-1

PART NUMBER:	100001457	DRAWN BY:	E CAMERON
CREATED:	9/11/2020	MODIFIED:	8/21/2023

SHEET: 2 OF 2

100001457.idw