NOTES

- FOR COMPLETE DESIGN AND PRODUCT INFORMATION CONTACT JENSEN PRECAST.

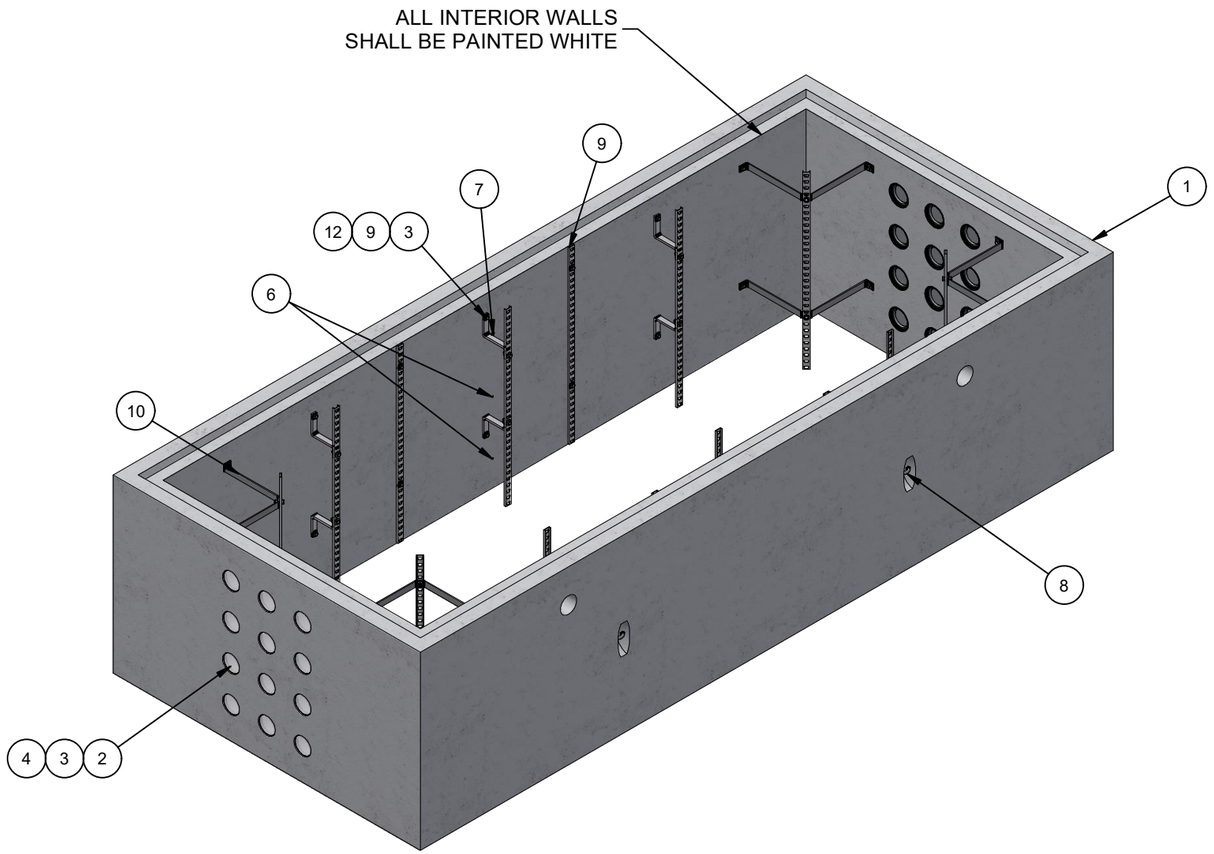

ISO LAYOUT

BILL OF MATERIALS

ITEM	QTY	PART NUMBER	DESCRIPTION
1	101.279 ft^3	100011425	CONCRETE MIX GENERIC 5000 PSI
2	24	100003014	TERMINATOR DUCT WITH SEAL 4.5IN OR 4.35IN T4351
3	24	100019623	TERMINATOR DUCT EXTENSION 4X2 TBE4X2
4	24	100021260	TERMINATOR DUCT EXTENSION 4X1 TBE4X1
5	36	100012720	INSERT PLASTIC W/ BREAK OFF SNAP 0.5IN
6	4	100005928	INSERT FERRULE LOOP 1/4 X 2-3/4 PLATED F42
7	2	100005931	GROUND INSERTS BOTTLE ROCKET BRASS 1/4X16 STEEL ROD 12D69
8	4	100004880	ANCHOR UTILITY .671DIA 5.625-SLAB GALV P75 6UA671
9	14	100002569	CABLE RACK 32 HOLE GALV W/O TABS
10	8	100002583	CABLE RACK CORNER SUPPORT 18 X 18 10A56 GALV
11	12	100008361	CABLE RACK SUPPORT L-BRACKET 1/2 x 1-1/4 X 6-9/16 INW 10A46
12	20.000 ft	100007103	BONDING RIBBON 1/4
13	4	100007105	CLAMP BONDING LEAD GTE 12A56
14	36	100013415	MACHINE BOLT 1/2-13 UNRC-2A 2IN HDG
15	2	100007239	CLAMP FARGO SILVER PLATED W/COPPER BOLT 12A57
16	1.000 gal	100006420	COATING PAINT LATEX WHITE
17	76	100008814	WASHER FLAT 1/2 REGULAR TYPE A GALV
18	20	100034614	HEX BOLT 1/2-13 UNC 1.5 GALV
19	20	100007007	HEX NUT 1/2-13 UNC HEAVY GALV
20	2	300125724	REINFORCING MAT 300125724
21	2	300125737	REINFORCING MAT 300125737

100001448.idw

LIFTING NOTES

- THIS CONCRETE PRODUCT IS DESIGNED TO BE LIFTED AT 2500 PSI WITH 4 LIFT CONNECTIONS EQUALLY LOADED TO 2 LIFTING POINTS AT A MINIMUM 60° SLING ANGLE, MEASURED FROM HORIZONTAL.

BURY DEPTH:	0.8' - 9.3' to Top		
WATER LEVEL:	3.5'	WEIGHT:	15350.93 Lbs
DESIGN SPEC:	ASTM C857,ACI 318	LOADING SPEC:	A-16 (AASHTO HS20-44)
REINFORCEMENT TYPE:	Rebar	LIFTING TYPE:	A-Anchor

JENSEN PRECAST EST. 1968

WWW.JENSENPRECAST.COM

©2019 Jensen Precast- All rights reserved.
All materials appearing as Jensen Precast documents and the like are proprietary work product and are protected under U.S. copyright and other laws.
Unless in conjunction with business conducted with Jensen Precast, any use of Jensen Precast work product without express, written consent is prohibited, and recipient is prohibited from distributing any and all work product to non-approved third parties under penalty of civil action.

REVISION HISTORY

REV	DESCRIPTION	DATE	BY
A	DRAWING CREATED	7/1/2020	MRV

DESCRIPTION: Riser 72180x48 Rect. Riser Terminators AT&T Int. Coating - White Latex Paint

CASTING LAYOUT

REV: A-1

SHEET: 1 OF 2

PART NUMBER:	100001448	DRAWN BY:	M.Vallarino
CREATED:	7/1/2020	MODIFIED:	4/22/2021

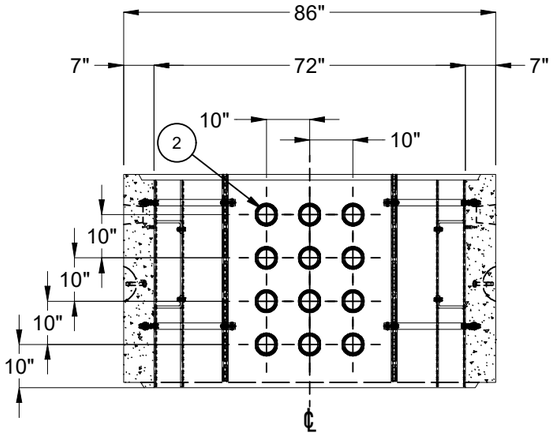

SECTION A-A

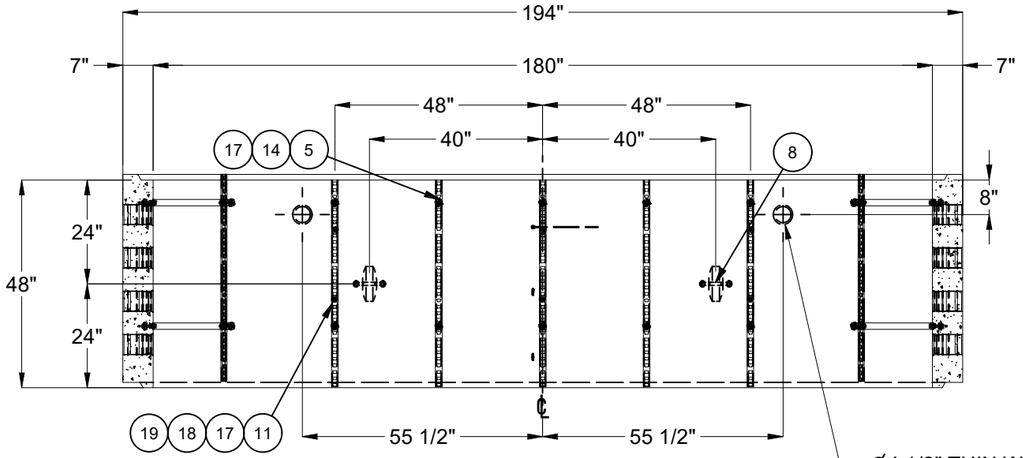

SECTION B-B

Ø4 1/2" THIN WALL KNOCKOUTS EXTERIOR WALLS 4 TOTAL

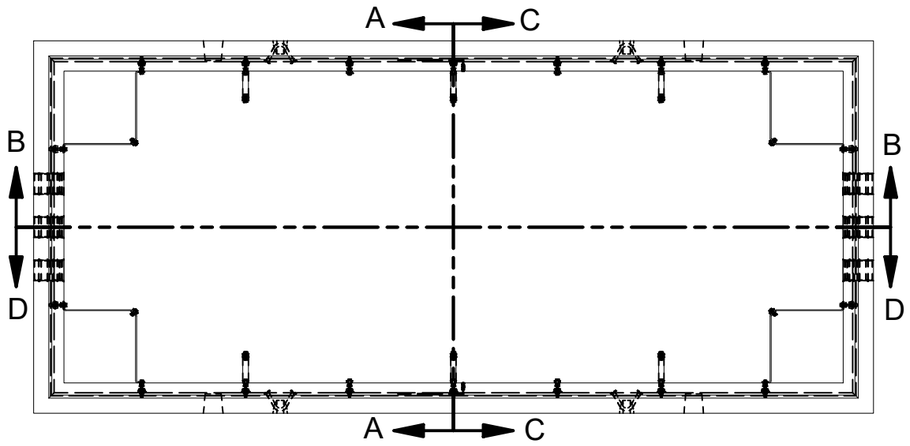

PLAN VIEW

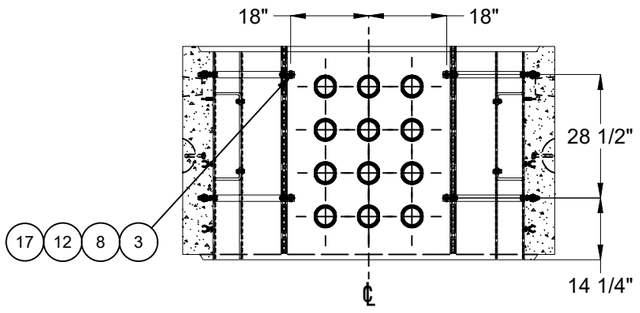

SECTION C-C

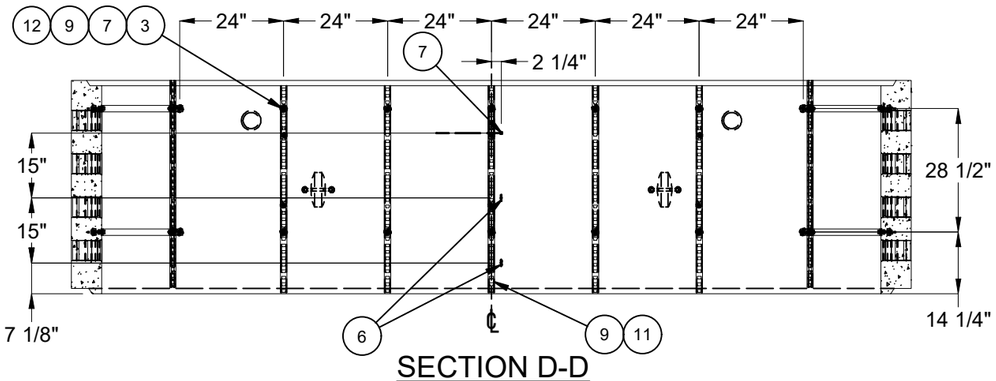

SECTION D-D

100001448.idw

BURY DEPTH:	0.8' - 9.3' to Top		
WATER LEVEL:	3.5'	WEIGHT:	15350.93 Lbs
DESIGN SPEC:	ASTM C857,ACI 318	LOADING SPEC:	A-16 (AASHTO HS20-44)
REINFORCEMENT TYPE:	Rebar	LIFTING TYPE:	A-Anchor

JENSEN PRECAST EST. 1968

WWW.JENSENPRECAST.COM

©2019 Jensen Precast- All rights reserved.
All materials appearing as Jensen Precast documents and the like are proprietary work product and are protected under U.S. copyright and other laws.
Unless in conjunction with business conducted with Jensen Precast, any use of Jensen Precast work product without express, written consent is prohibited, and recipient is prohibited from distributing any and all work product to non-approved third parties under penalty of civil action.

DESCRIPTION:	Riser 72180x48 Rect. Riser Terminators AT&T Int. Coating - White Latex Paint CASTING DRAWING		REV: A-1
PART NUMBER:	100001448	DRAWN BY:	M.Vallarino
CREATED:	7/1/2020	MODIFIED:	4/22/2021

SHEET: 2 OF 2