DESIGN NOTES:

- CONCRETE SHALL HAVE A 28 DAY MINIMUM COMPRESSIVE STRENGTH OF 5000 PSI
- SOIL UNIT WEIGHT DRY - 110 lbs/cu.ft.
- EQUIVALENT LATERAL PRESSURE DRY - 40 lbs/cu.ft.
- SOIL UNIT WEIGHT WET - 120 lbs/cu.ft.
- EQUIVALENT LATERAL PRESSURE WET - 80 lbs/cu.ft.

PRODUCTION NOTES:

- LIFTING INSERTS SHALL BE INSTALLED PER MANUFACTURER'S REQUIREMENTS
- APPLIED FINISH - NONE
- INTERNAL LINER/COATING - NONE
- EXTERNAL LINER/COATING - NONE

BILL OF MATERIALS

ITEM	UNIT QTY	QTY	PART NUMBER	DESCRIPTION
1	13.525 ft^3	13.525 ft^3	100011425	CONCRETE MIX GENERIC 5000 PSI
2	1	1	100020475	REINFORCING MAT 100020475
3	1	4	100004880	ANCHOR UTILITY .671DIA 5.625-SLAB GALV P75 6UA671

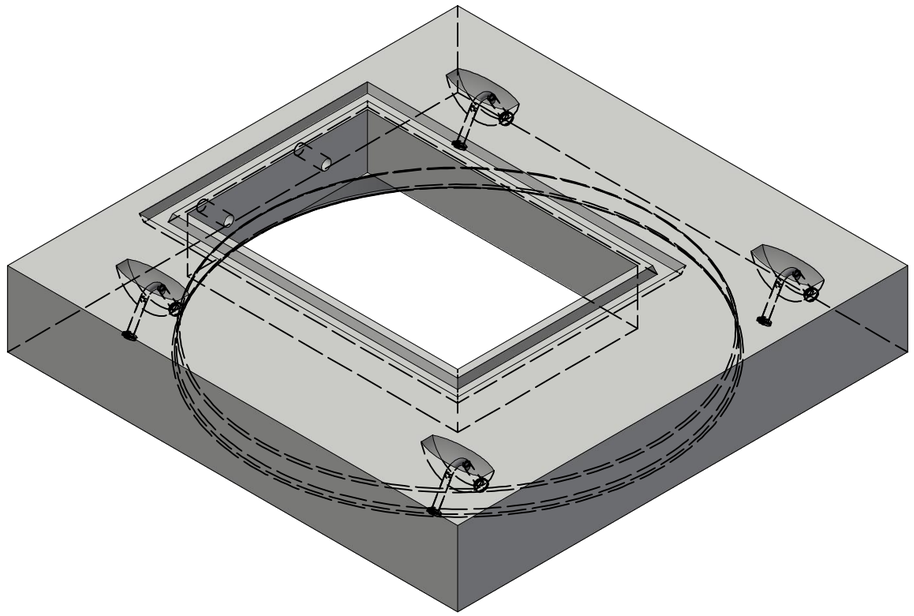

ISO VIEW

100001407.idw

REVISION HISTORY			
REV	DESCRIPTION	DATE	BY
1	INITIAL RELEASE	7/24/2024	J.R.

BURY DEPTH:	0.0' - 1.0' to Top		
WATER LEVEL:	Below Structure	APPROX. WEIGHT:	2022.05 Lbs
DESIGN SPEC:	ACI 318,ASTM C890	LOADING SPEC:	A-16 (AASHTO HS20-44)
REINFORCEMENT TYPE:	Rebar	LIFTING TYPE:	A-Anchor

JENSEN PRECAST EST. 1968

WWW.JENSENPRECAST.COM

©2023 Jensen Precast- All rights reserved.
All materials appearing as Jensen Precast documents and the like are proprietary work product and are protected under U.S. copyright and other laws.
Unless in conjunction with business conducted with Jensen Precast, any use of Jensen Precast work product without express, written consent is prohibited, and recipient is prohibited from distributing any and all work product to non-approved third parties under penalty of civil action.

DESCRIPTION:	Manhole D4858x10 Flat Top TU 2436"E CASTING LAYOUT		REV: A-2
PART NUMBER:	100001407	DRAWN BY:	J. Ramirez
CREATED:	2/24/2023	MODIFIED:	2/28/2023
			SHEET: 1 OF 2

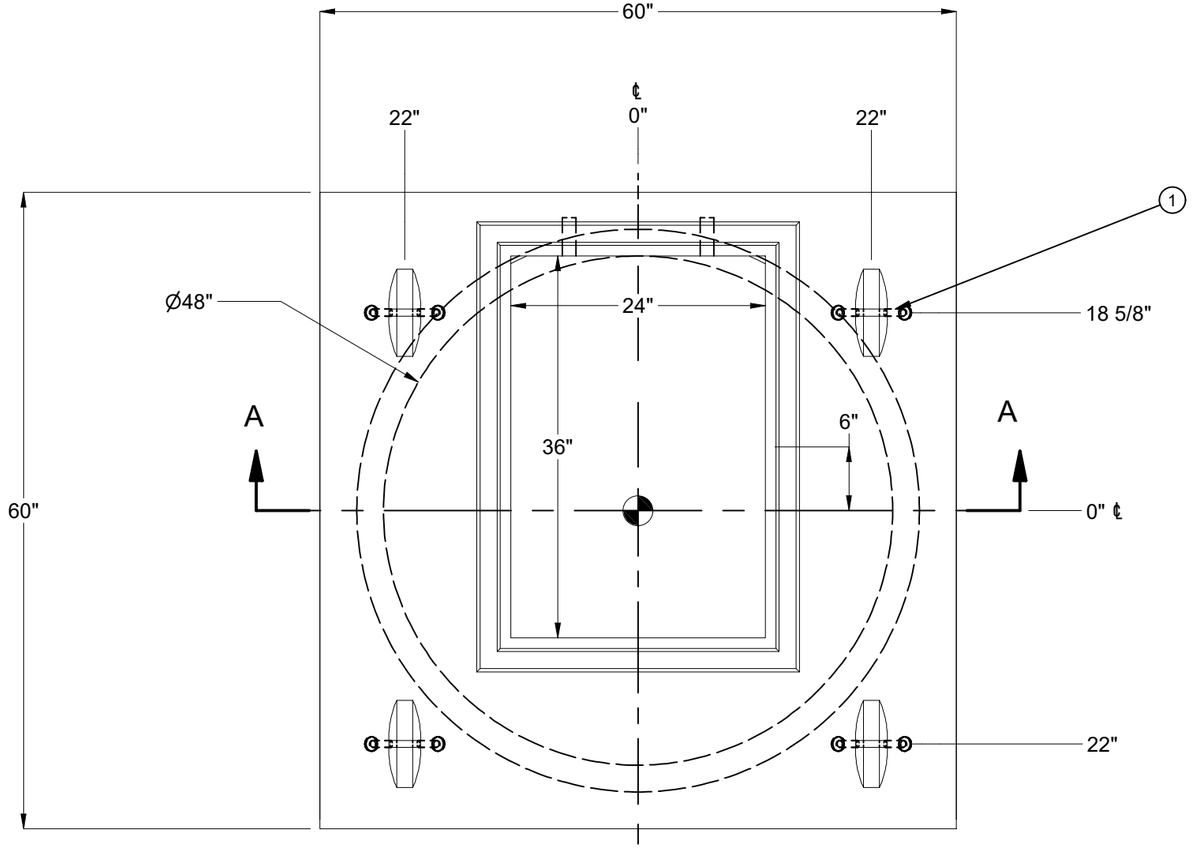

PLAN VIEW

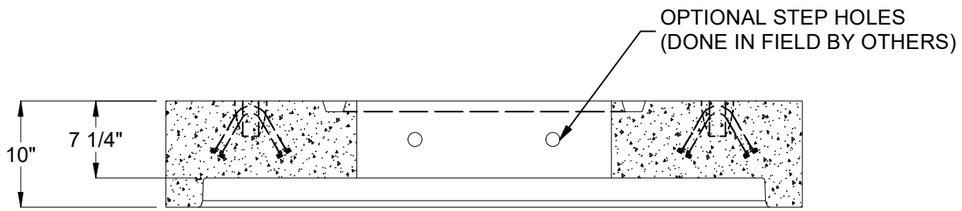

SECTION A-A

BURY DEPTH:	0.0' - 1.0' to Top		
WATER LEVEL:	Below Structure	APPROX. WEIGHT:	2022.05 Lbs
DESIGN SPEC:	ACI 318,ASTM C890	LOADING SPEC:	A-16 (AASHTO HS20-44)
REINFORCEMENT TYPE:	Rebar	LIFTING TYPE:	A-Anchor

JENSEN PRECAST EST. 1968

WWW.JENSENPRECAST.COM

©2023 Jensen Precast- All rights reserved.
All materials appearing as Jensen Precast documents and the like are proprietary work product and are protected under U.S. copyright and other laws.
Unless in conjunction with business conducted with Jensen Precast, any use of Jensen Precast work product without express, written consent is prohibited, and recipient is prohibited from distributing any and all work product to non-approved third parties under penalty of civil action.

DESCRIPTION:	Manhole D4858x10 Flat Top TU 2436"E CASTING DRAWING		REV: A-2
PART NUMBER:	100001407	DRAWN BY:	J. Ramirez
CREATED:	2/24/2023	MODIFIED:	2/28/2023
			SHEET: 2 OF 2

100001407.idw