DESIGN NOTES:

- CONCRETE SHALL HAVE A 28 DAY MINIMUM COMPRESSIVE STRENGTH OF 5000 PSI
- SOIL UNIT WEIGHT DRY - 110 lbs/cu.ft.
- EQUIVALENT LATERAL PRESSURE DRY - 40 lbs/cu.ft.
- SOIL UNIT WEIGHT WET - 120 lbs/cu.ft.
- EQUIVALENT LATERAL PRESSURE WET - 80 lbs/cu.ft.

PRODUCTION NOTES:

- THIS PRODUCT SHALL ONLY BE PRODUCED IN A JENSEN PRECAST FACILITY
- LIFTING INSERTS SHALL BE INSTALLED PER MANUFACTURER'S REQUIREMENTS
- APPLIED FINISH - NONE
- INTERNAL LINER/COATING - NONE
- EXTERNAL LINER/COATING - NONE

BILL OF MATERIALS

ITEM	UNIT QTY	QTY	PART NUMBER	DESCRIPTION
1	1	1	400018325	REINFORCING MAT 400018325
2	1	4	200090811	REINFORCING MAT 200090811
3	61.533 ft^3	61.533 ft^3	100011425	CONCRETE MIX GENERIC 5000 PSI
4	1	4	100004880	ANCHOR UTILITY .671DIA 5.625-SLAB GALV P75 6UA671
5	1	4	100004878	ANCHOR UTILITY .671DIA 5-SLAB GALV P75 5UA671

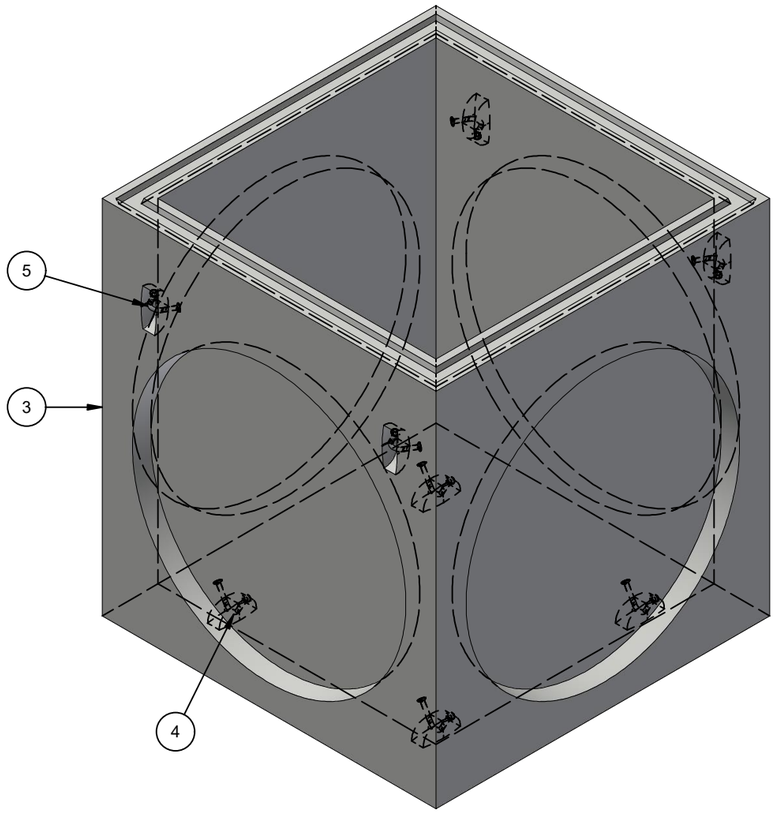

ISO LAYOUT

LIFTING NOTES
■ INSTALLATION: THIS CONCRETE PRODUCT IS DESIGNED TO BE LIFTED AT 5000 PSI WITH 4 LIFT CONNECTIONS EQUALLY LOADED TO 2 LIFTING POINTS AT A MINIMUM 60° SLING ANGLE, MEASURED FROM HORIZONTAL.
■ DEMOLDING: THIS CONCRETE PRODUCT IS DESIGNED TO BE LIFTED AT 2500 PSI WITH 4 LIFT CONNECTIONS EQUALLY LOADED TO 2 LIFTING POINTS AT A MINIMUM 60° SLING ANGLE, MEASURED FROM HORIZONTAL.
*All rigging shall be design by a qualified professional. Loading diagrams show illustrations of possible rigging setups to achieve the required sling angle and load leg equalization. Other valid rigging configurations are possible. A qualified professional must be consulted prior to lifting.

RIGGING DIAGRAMS*

INSTALLATION	B	DEMOLDING	B

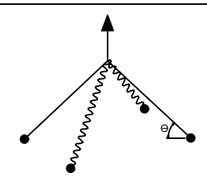

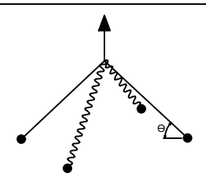

CHANGE HISTORY

NO.	DESCRIPTION	DATE	BY
2	2406-57178-1 - INITIAL RELEASE	7/8/2024	RM
2	QUICK CHANGE - ADDED DIMENSIONS (THINWALL KO)	9/7/2024	RM
3			

BURY DEPTH:	0.0' - 5.0' to Top		
WATER LEVEL:	Below Structure	APPROX. WEIGHT:	9373.37 Lbs
DESIGN SPEC:	ACI 318,ASTM C857,ASTM C890	LOADING SPEC:	A-16 (AASHTO HS20-44)
REINFORCEMENT TYPE:	Rebar	LIFTING TYPE:	A-Anchor

JENSEN PRECAST EST. 1968

WWW.JENSENPRECAST.COM

©2024 Jensen Precast- All rights reserved.
All materials appearing as Jensen Precast documents and the like are proprietary work product and are protected under U.S. copyright and other laws.
Unless in conjunction with business conducted with Jensen Precast, any use of Jensen Precast work product without express, written consent is prohibited, and recipient is prohibited from distributing any and all work product to non-approved third parties under penalty of civil action.

DESCRIPTION:
Vault 6060x72 Rect. Bottom Section Knockout
CASTING LAYOUT

REV: A-2

PART NUMBER:	100001404	DRAWN BY:	R.Mangoba
CREATED:	7/2/2024	MODIFIED:	9/7/2024

SHEET: 1 OF 2

100001404.idw

FEATURES		
ID	DESCRIPTION	QTY
A	Ø58" x 3 1/2" Deep Knockout	4

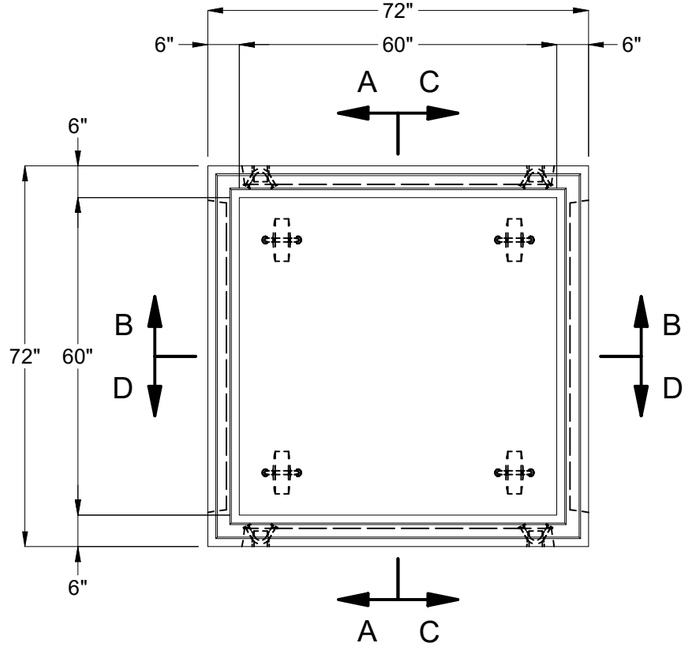

PLAN VIEW

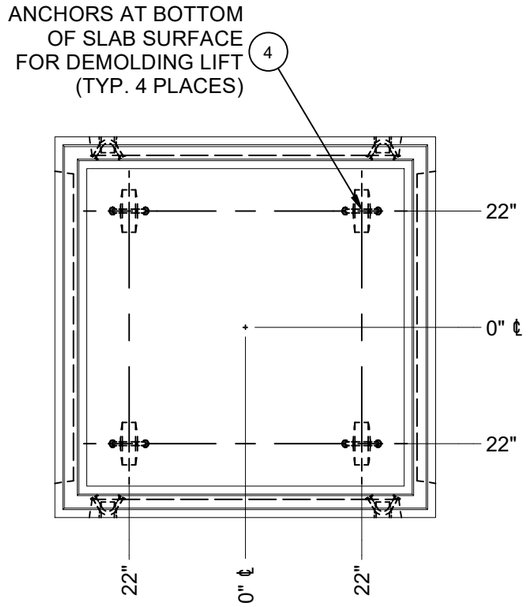

PLAN VIEW
(SHOWING OBJECT DIMENSIONS)

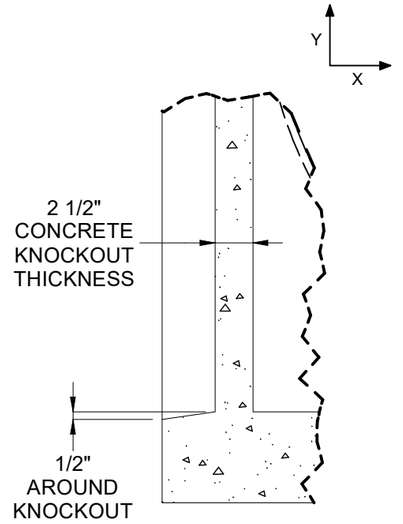

DETAIL J
ROUND KNOCKOUT SECTION
ADDITIONAL DETAIL

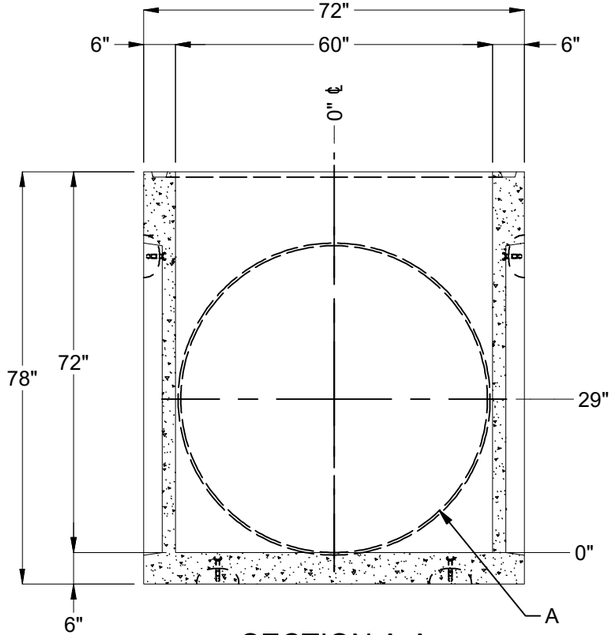

SECTION A-A

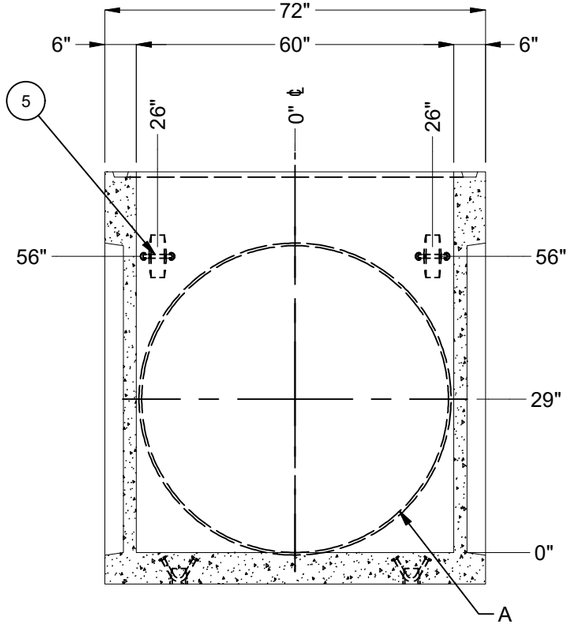

SECTION B-B

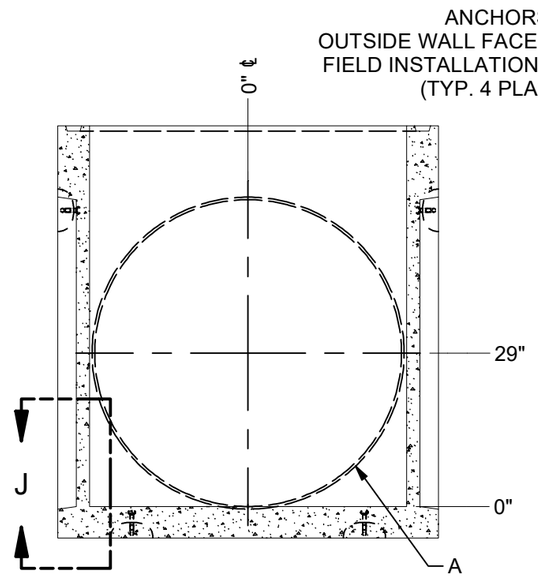

SECTION C-C

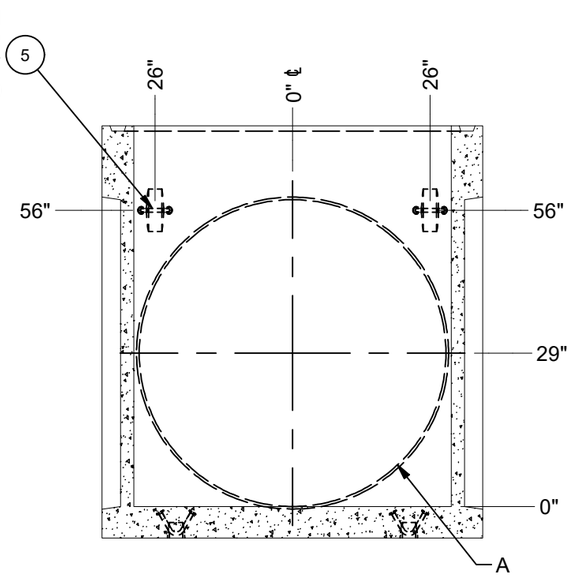

SECTION D-D

BURY DEPTH:	0.0' - 5.0' to Top		
WATER LEVEL:	Below Structure	APPROX. WEIGHT:	9373.37 Lbs
DESIGN SPEC:	ACI 318,ASTM C857,ASTM C890	LOADING SPEC:	A-16 (AASHTO HS20-44)
REINFORCEMENT TYPE:	Rebar	LIFTING TYPE:	A-Anchor

JENSEN PRECAST EST. 1968
WWW.JENSENPRECAST.COM

©2024 Jensen Precast- All rights reserved.
All materials appearing as Jensen Precast documents and the like are proprietary work product and are protected under U.S. copyright and other laws.
Unless in conjunction with business conducted with Jensen Precast, any use of Jensen Precast work product without express, written consent is prohibited, and recipient is prohibited from distributing any and all work product to non-approved third parties under penalty of civil action.

DESCRIPTION:	Vault 6060x72 Rect. Bottom Section Knockout CASTING DRAWING		REV: A-2
PART NUMBER:	100001404	DRAWN BY:	R.Mangoba
CREATED:	7/2/2024	MODIFIED:	9/7/2024
			SHEET: 2 OF 2

100001404.idw