DESIGN NOTES:

- CONCRETE SHALL HAVE A 28 DAY MINIMUM COMPRESSIVE STRENGTH OF 5000 PSI
- SOIL UNIT WEIGHT DRY - 110 lbs/cu.ft.
- EQUIVALENT LATERAL PRESSURE DRY - 66 lbs/cu.ft.
- SOIL UNIT WEIGHT WET - 120 lbs/cu.ft.
- EQUIVALENT LATERAL PRESSURE WET - 94 lbs/cu.ft.

PRODUCTION NOTES:

- THIS PRODUCT SHALL ONLY BE PRODUCED IN A JENSEN PRECAST FACILITY
- LIFTING INSERTS SHALL BE INSTALLED PER MANUFACTURER'S REQUIREMENTS
- APPLIED FINISH - NONE
- INTERNAL LINER/COATING - NONE
- EXTERNAL LINER/COATING - NONE

BILL OF MATERIALS

ITEM	UNIT QTY	QTY	PART NUMBER	DESCRIPTION
1	13.645 ft^3	13.645 ft^3	100011425	CONCRETE MIX GENERIC 5000 PSI
2	1	2	100024063	GROUND CLAMP BRONZE 1/2-1 BLACKBURN TYPE J
3	1	2	100005932	INSERT GROUND BRONZE BOTTLE ROCKET 1/2-13 UNC WITH 11IN COPPER ROD 12H69
4	1	1	100020472	REINFORCING MAT 100020472
5	1	4	100003350	INS THRD FRL THNSLB STRUT FX-16 7/8IN ZINC

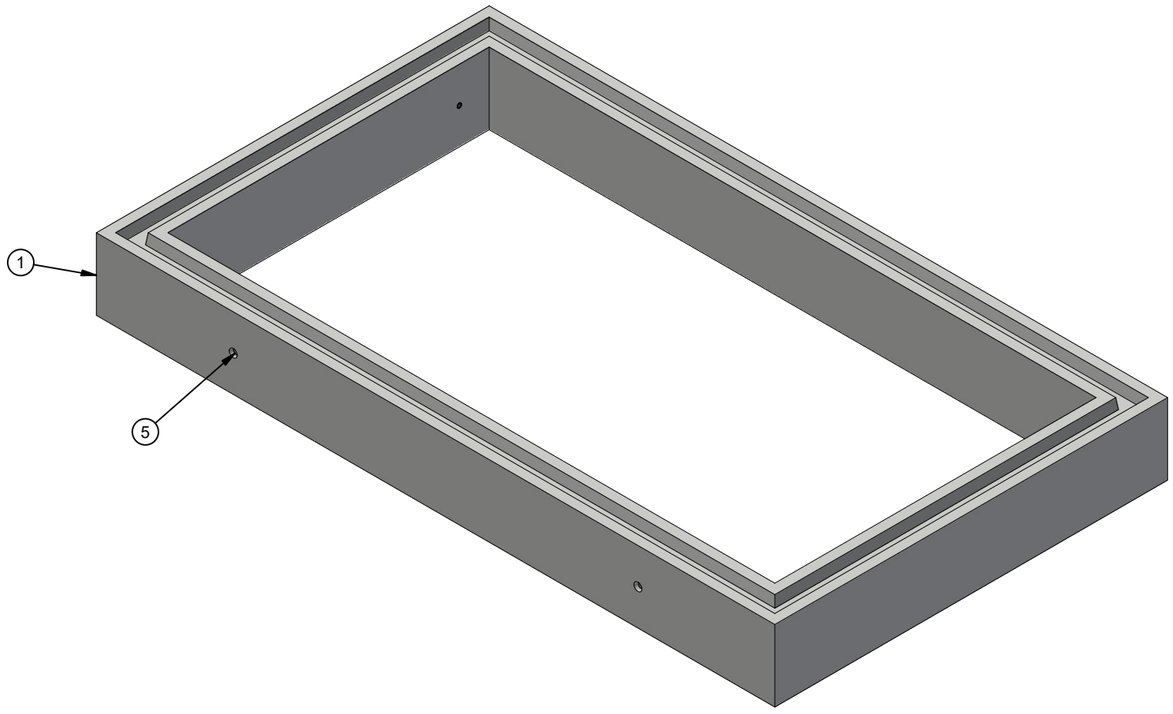

ISO LAYOUT

LIFTING NOTES
■ THIS CONCRETE PRODUCT IS DESIGNED TO BE LIFTED AT 3000 PSI WITH 4 LIFT CONNECTIONS EQUALLY LOADED TO 2 LIFTING POINTS AT A MINIMUM 45° SLING ANGLE, MEASURED FROM HORIZONTAL.
*All rigging shall be design by a qualified professional. Loading diagrams show illustrations of possible rigging setups to achieve the required sling angle and load leg equalization. Other valid rigging configurations are possible. A qualified professional must be consulted prior to lifting.

RIGGING DIAGRAM*	B

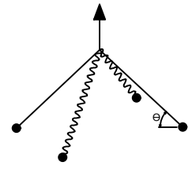

BURY DEPTH:	0.0' - 5.0' to Top		
WATER LEVEL:	2.0'	APPROX. WEIGHT:	2053.78 Lbs
DESIGN SPEC:	ACI 318,ASTM C857	LOADING SPEC:	A-16 (AASHTO HS20-44)
REINFORCEMENT TYPE:	Rebar	LIFTING TYPE:	Insert

JENSEN PRECAST EST. 1968

WWW.JENSENPRECAST.COM

©2024 Jensen Precast- All rights reserved.
All materials appearing as Jensen Precast documents and the like are proprietary work product and are protected under U.S. copyright and other laws.
Unless in conjunction with business conducted with Jensen Precast, any use of Jensen Precast work product without express, written consent is prohibited, and recipient is prohibited from distributing any and all work product to non-approved third parties under penalty of civil action.
This product shall only be produced in a Jensen Precast facility.

CHANGE HISTORY

NO.	DESCRIPTION	DATE	BY
1	INITIAL RELEASE	12/16/2024	APS

DESCRIPTION:	Riser 54102x12 PG&E 04-3415 CASTING LAYOUT		REV: A-2-1
PART NUMBER:	100001378	DRAWN BY: A. Sprung	SHEET: 1 OF 2
CREATED:	10/8/2020	MODIFIED: 12/17/2024	

100001378.idw

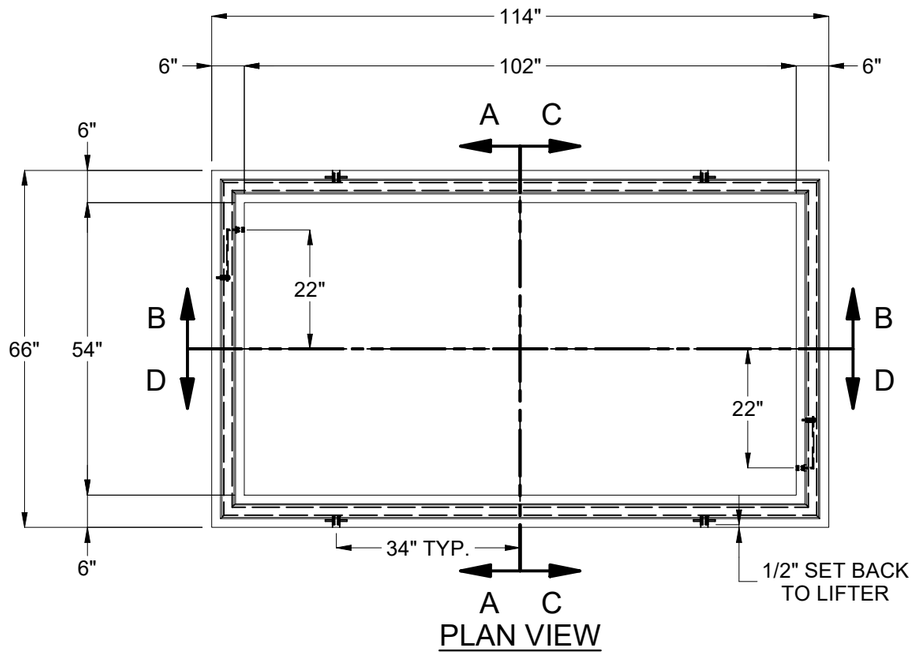

PLAN VIEW

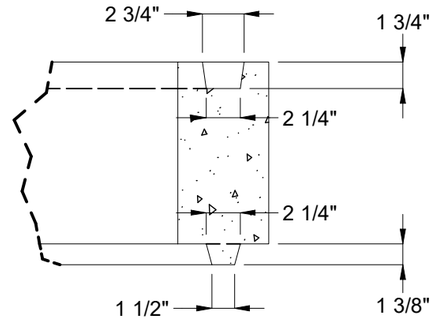

DETAIL E

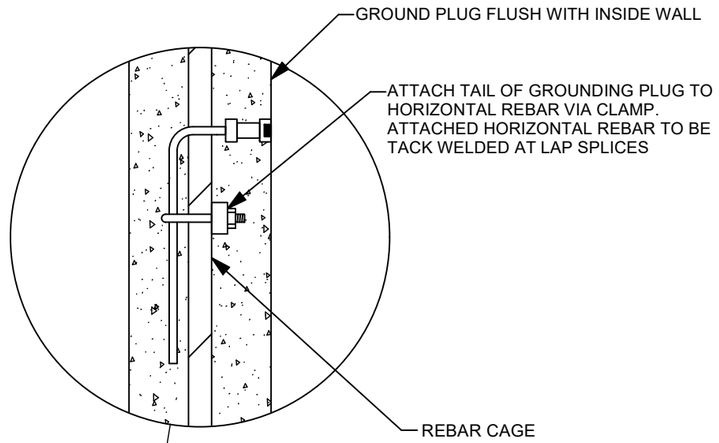

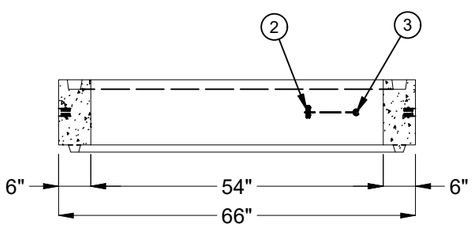

SECTION A-A

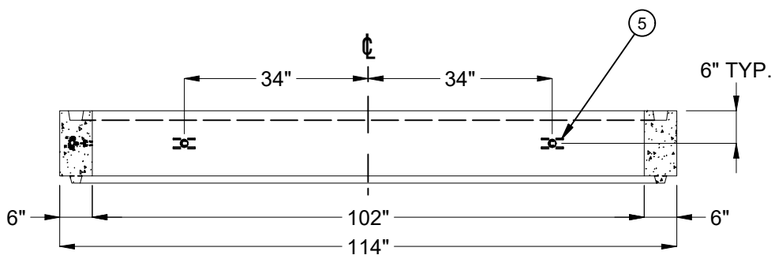

SECTION B-B

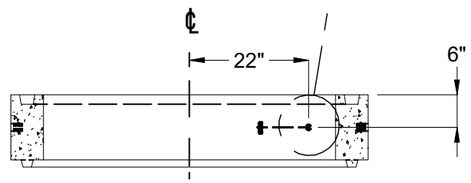

SECTION C-C

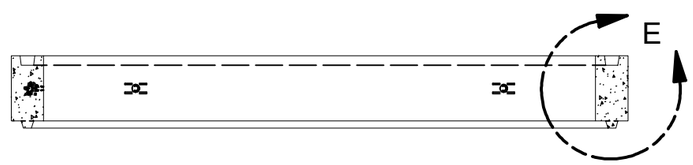

SECTION D-D

BURY DEPTH:	0.0' - 5.0' to Top		
WATER LEVEL:	2.0'	APPROX. WEIGHT:	2053.78 Lbs
DESIGN SPEC:	ACI 318,ASTM C857	LOADING SPEC:	A-16 (AASHTO HS20-44)
REINFORCEMENT TYPE:	Rebar	LIFTING TYPE:	Insert

JENSEN PRECAST EST. 1968

WWW.JENSENPRECAST.COM

©2024 Jensen Precast- All rights reserved.
All materials appearing as Jensen Precast documents and the like are proprietary work product and are protected under U.S. copyright and other laws.
Unless in conjunction with business conducted with Jensen Precast, any use of Jensen Precast work product without express, written consent is prohibited, and recipient is prohibited from distributing any and all work product to non-approved third parties under penalty of civil action.
This product shall only be produced in a Jensen Precast facility.

DESCRIPTION:	Riser 54102x12 PG&E 04-3415 CASTING DRAWING		REV: A-2-1
PART NUMBER:	100001378	DRAWN BY:	A. Sprung
CREATED:	10/8/2020	MODIFIED:	12/17/2024
			SHEET: 2 OF 2

100001378.idw