| NOTES |
|---|
| ■ FOR COMPLETE DESIGN AND PRODUCT INFORMATION CONTACT JENSEN PRECAST. |

## BILL OF MATERIALS

| ITEM | QTY | PART NUMBER | DESCRIPTION |
|---|---|---|---|
| 1 | 14.273 ft^3 | 100011425 | CONCRETE MIX GENERIC 5000 PSI |
| 2 | 1 | 100018996 | REINFORCING MAT 100018996 |
| 3 | 4 | 100002767 | Insert Ferrule Loop 0.75 x 3.5" Zinc (F42 or Equiv.) |
| 4 | 4 | 100002765 | Insert Ferrule Loop 0.5 x 2.75" Zinc (F42 or Equiv.) |
| 5 | 2 | 100005932 | INSERT GROUND BRONZE BOTTLE ROCKET 1/2-13 UNC WITH 11IN COPPER ROD 12H69 |
| 6 | 2 | 100007200 | COPPER SPLIT BOLT BURNDY KS29 |
| 7 | 288.0000 in | 100022114 | STRUT C-CHANNEL 13/16 X 1-5/8 16GA SOLID GALV SHALLOW W-400/P4000 |

100001326.idw

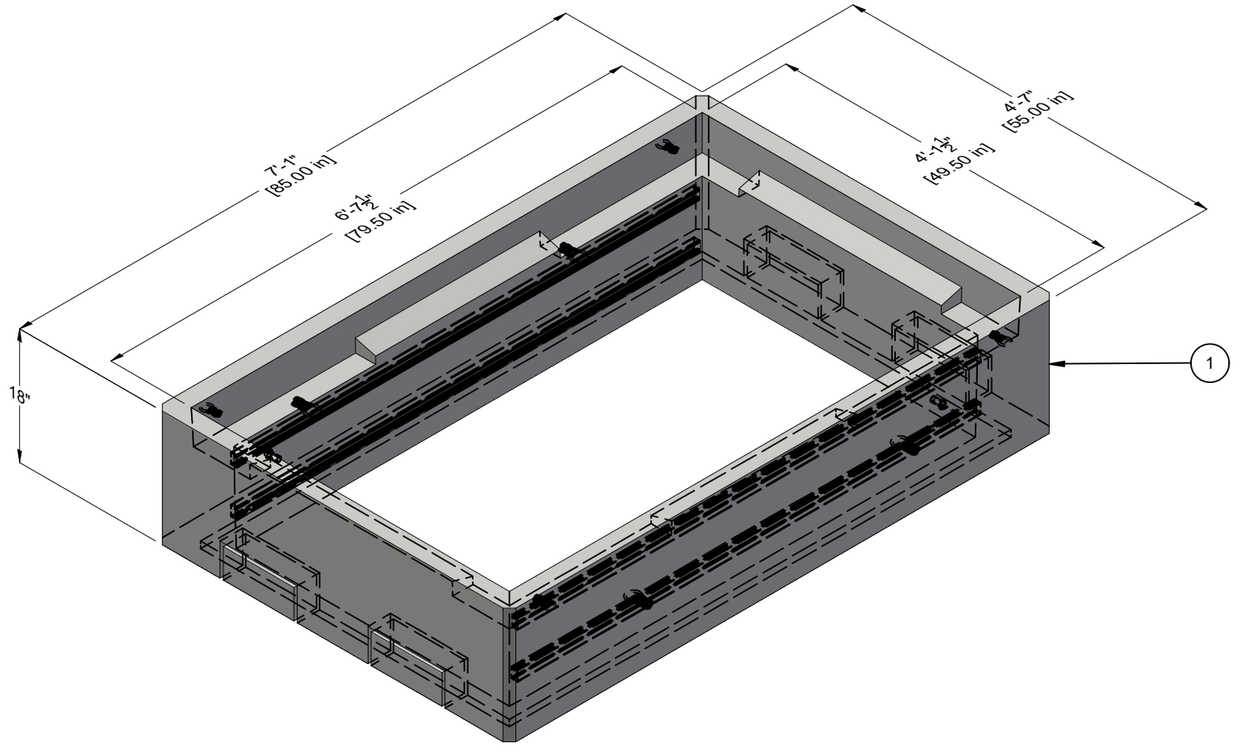


ISO REF

| LIFTING NOTES |
|---|
| ■ DEMOLDING: THIS CONCRETE PRODUCT IS DESIGNED TO BE LIFTED AT 2000 PSI WITH 4 LIFT CONNECTIONS EQUALLY LOADED TO 4 LIFTING POINTS AT 60° TO 90° SLING ANGLE, MEASURED FROM HORIZONTAL. |
| ■ FIELD INSTALLATION: THIS CONCRETE PRODUCT IS DESIGNED TO BE LIFTED AT 4500 PSI WITH 4 LIFT CONNECTIONS EQUALLY LOADED TO 2 LIFTING POINTS AT 70° TO 90° SLING ANGLE, MEASURED FROM HORIZONTAL. |

| CHANGE HISTORY | | | |
|---|---|---|---|
| REV | DESCRIPTION | DATE | BY |
| A | LEGACY DRAWING | - | - |
| B | 2004-19642-NNV - IFS FORMAT, MATCH PRODUCT STRUCTURE | 10/21/22 | EDC |
| B | REPLACED 100007468 (obsoleted) WITH 100005932 | 10/24/22 | EDC |
| C | ADDED GROUNDING DETAILS | 03/15/2023 | EDC |
| D | ADDED ENDWALL BLOCKOUTS & TOP WALL PROFILE, REBAR REV. | 12/12/2023 | EDC/RM |

| | | | |
|---|---|---|---|
| BURY DEPTH: | 0.0' - 3.5' to Top | | |
| WATER LEVEL: | Below Structure | APPROX. WEIGHT: | 2167.23 Lbs |
| DESIGN SPEC: | ACI 318,ASTM C857 | LOADING SPEC: | A-16 (AASHTO HS20-44) |
| REINFORCEMENT TYPE: | Rebar | LIFTING TYPE: | Insert |

JENSEN PRECAST EST. 1968

WWW.JENSENPRECAST.COM

©2023 Jensen Precast- All rights reserved.
All materials appearing as Jensen Precast documents and the like are proprietary work product and are protected under U.S. copyright and other laws.
Unless in conjunction with business conducted with Jensen Precast, any use of Jensen Precast work product without express, written consent is prohibited, and recipient is prohibited from distributing any and all work product to non-approved third parties under penalty of civil action.

DESCRIPTION:
Riser 4979x18 Knockout NV Energy 557 VB0071U
CASTING LAYOUT

REV: D-2

| | | | |
|---|---|---|---|
| PART NUMBER: | 100001326 | DRAWN BY: | E CAMERON |
| CREATED: | 8/7/2020 | MODIFIED: | 12/12/2023 |

SHEET: 1 OF 2

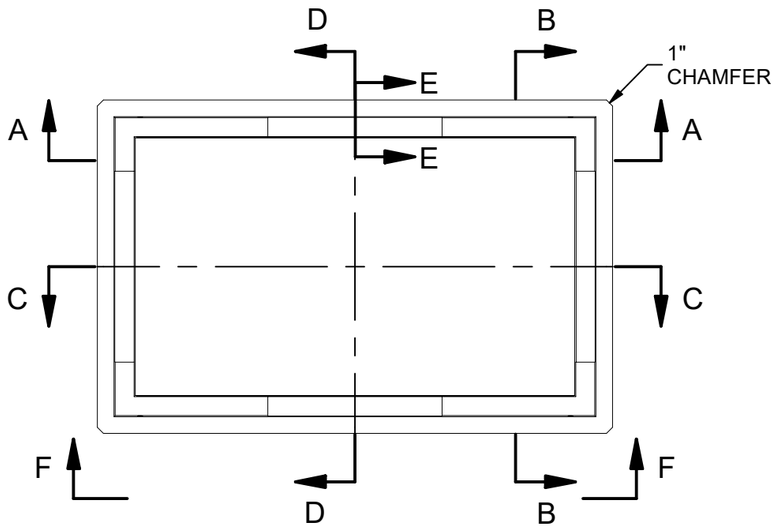


PLAN VIEW

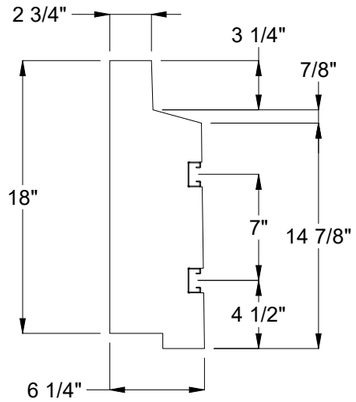


SECTION E-E

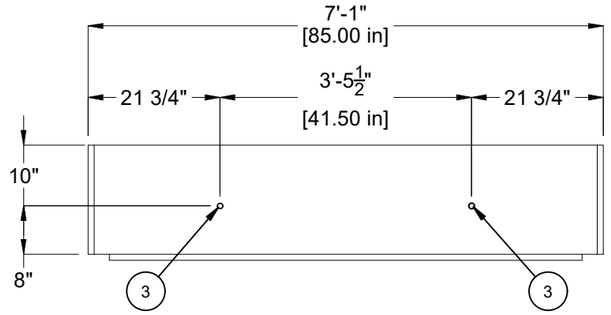


EXTERIOR RISER VIEW F-F

LIFTING INSERT LOCATION
OPPOSITE WALL SIMILAR

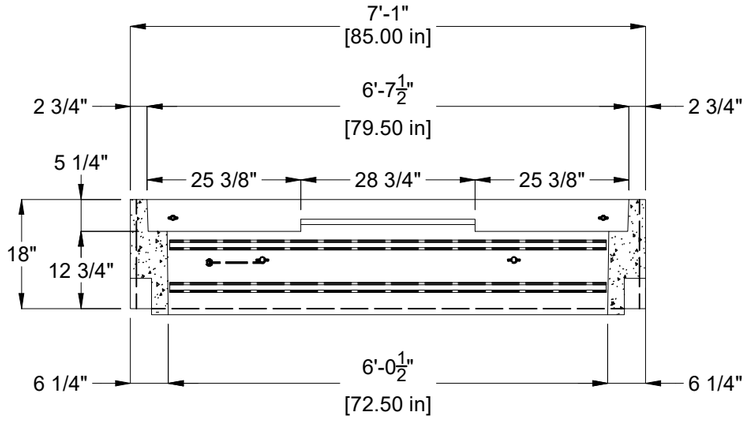


SECTION A-A

CONCRETE SHAPE

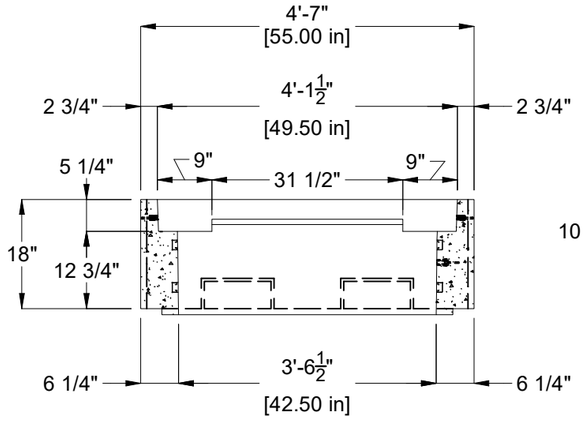


SECTION B-B

CONCRETE SHAPE

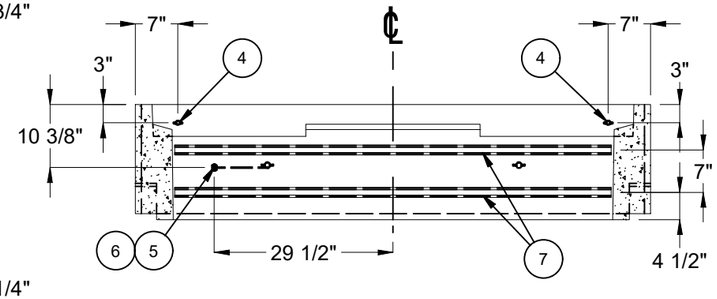


SECTION C-C

INTERIOR CAST-IN FEATURE LOCATIONS
OPPOSITE WALL SIMILAR

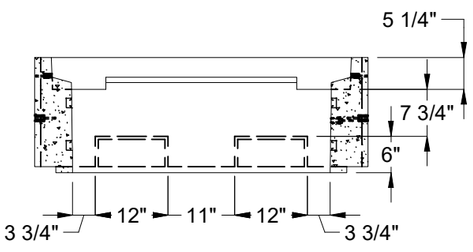


SECTION D-D

KNOCKOUT LOCATIONS
OPPOSITE WALL SIMILAR

| | | | |
|---|---|---|---|
| BURY DEPTH: | 0.0' - 3.5' to Top | | |
| WATER LEVEL: | Below Structure | APPROX. WEIGHT: | 2167.23 Lbs |
| DESIGN SPEC: | ACI 318,ASTM C857 | LOADING SPEC: | A-16 (AASHTO HS20-44) |
| REINFORCEMENT TYPE: | Rebar | LIFTING TYPE: | Insert |

JENSEN PRECAST EST. 1968

WWW.JENSENPRECAST.COM

©2023 Jensen Precast- All rights reserved.
All materials appearing as Jensen Precast documents and the like are proprietary work product and are protected under U.S. copyright and other laws.
Unless in conjunction with business conducted with Jensen Precast, any use of Jensen Precast work product without express, written consent is prohibited, and recipient is prohibited from distributing any and all work product to non-approved third parties under penalty of civil action.

| | | | |
|---|---|---|---|
| DESCRIPTION: | Riser 4979x18 Knockout NV Energy 557 VB0071U<br>CASTING DRAWING | | REV: D-2 |
| PART NUMBER: | 100001326 | DRAWN BY: | E CAMERON |
| CREATED: | 8/7/2020 | MODIFIED: | 12/12/2023 |
| | | | SHEET: 2 OF 2 |

100001326.idw