NOTES
■ FOR COMPLETE DESIGN AND PRODUCT INFORMATION CONTACT JENSEN PRECAST.

BILL OF MATERIALS

ITEM	QTY	PART NUMBER	DESCRIPTION	MASS
1	56.357 ft^3	100011425	CONCRETE MIX GENERIC 5000 PSI	8469.501 lbmass
2	1	300126074	REINFORCING MAT 300126074	0.041 lbmass
3	4	100002867	ANCHOR DOGBONE P52 2T X 3-3/8" GALV	2.306 lbmass
4	6.000 gal	100042909	COATING WATERPROOFING BG2000 MULTICOAT	0.000 lbmass

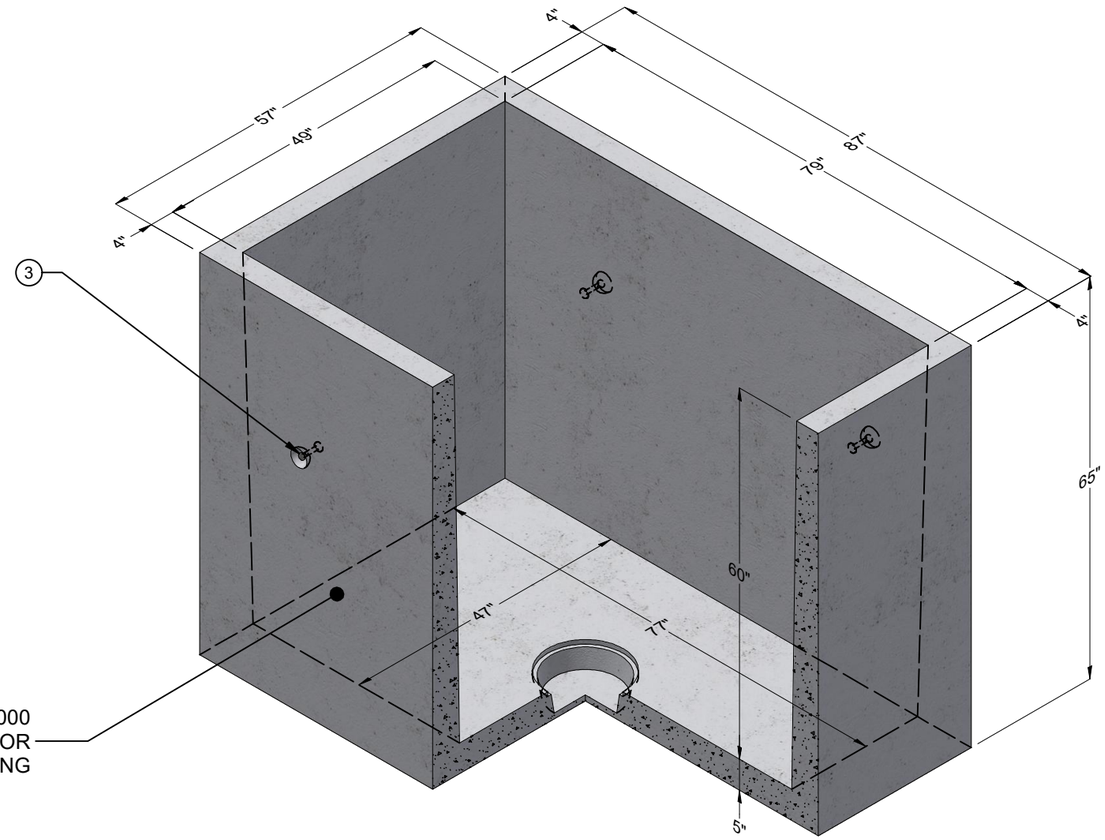

ISO 3/4 SECTION VIEW

LIFTING NOTES
■ THIS CONCRETE PRODUCT IS DESIGNED TO BE LIFTED AT 2000PSI WITH 4 LIFT CONNECTIONS EQUALLY LOADED TO 4 LIFTING POINTS AT A MINIMUM 90° SLING ANGLE, MEASURED FROM HORIZONTAL.

BURY DEPTH:	0.0' - 3.0' to Top		
WATER LEVEL:	8.0'	WEIGHT:	8478.77 Lbs
DESIGN SPEC:	ACI 318,ASTM C890	LOADING SPEC:	A-16 (AASHTO HS20-44)
REINFORCEMENT TYPE:	Rebar	LIFTING TYPE:	None

JENSEN PRECAST EST. 1968

WWW.JENSENPRECAST.COM

©2023 Jensen Precast- All rights reserved.
All materials appearing as Jensen Precast documents and the like are proprietary work product and are protected under U.S. copyright and other laws.
Unless in conjunction with business conducted with Jensen Precast, any use of Jensen Precast work product without express, written consent is prohibited, and recipient is prohibited from distributing any and all work product to non-approved third parties under penalty of civil action.

REVISION HISTORY			
REV	DESCRIPTION	DATE	BY
3	NEW DESIGN	5/16/22	DCH
4	ADDED BG-2000 EXT. COATING TO MATCH IFS	2/23/23	EDC
5	LADDER UPDATED BG2000 PART No.	8/21/2023	EDC

DESCRIPTION: Vault 4878x60 Rect. Bottom Section Core Drill Sump TMWA 557 Ext. Coating - BG2000 Waterproofing Multicoat CASTING LAYOUT			REV: D-1
PART NUMBER:	100001312	DRAWN BY: E CAMERON	SHEET: 1 OF 2
CREATED:	8/7/2020	MODIFIED: 8/21/2023	

10000312.idw

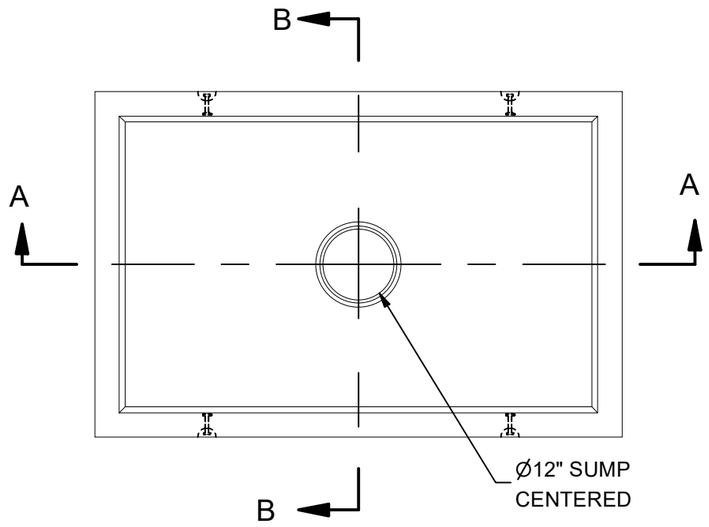

PLAN VIEW
(SHOWING INSIDE FLOOR)

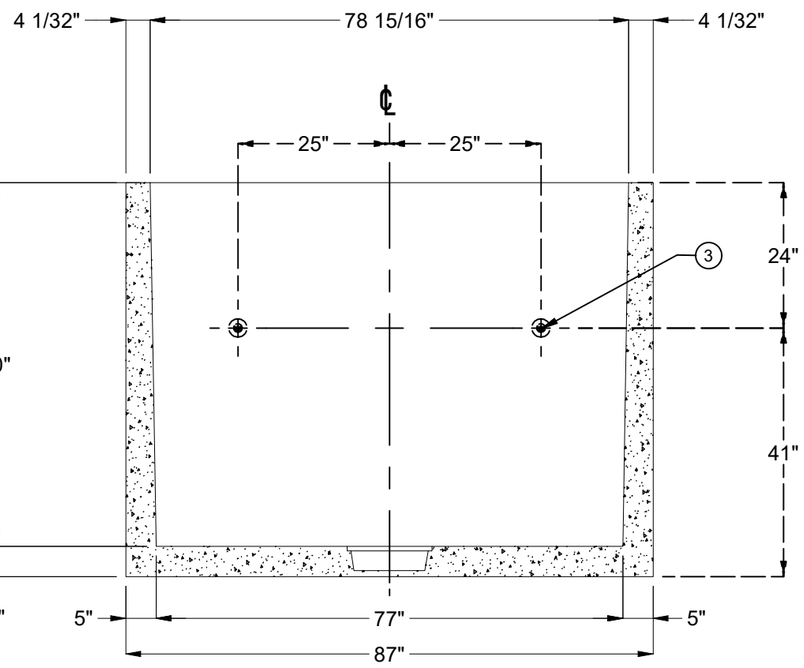

SECTION A-A

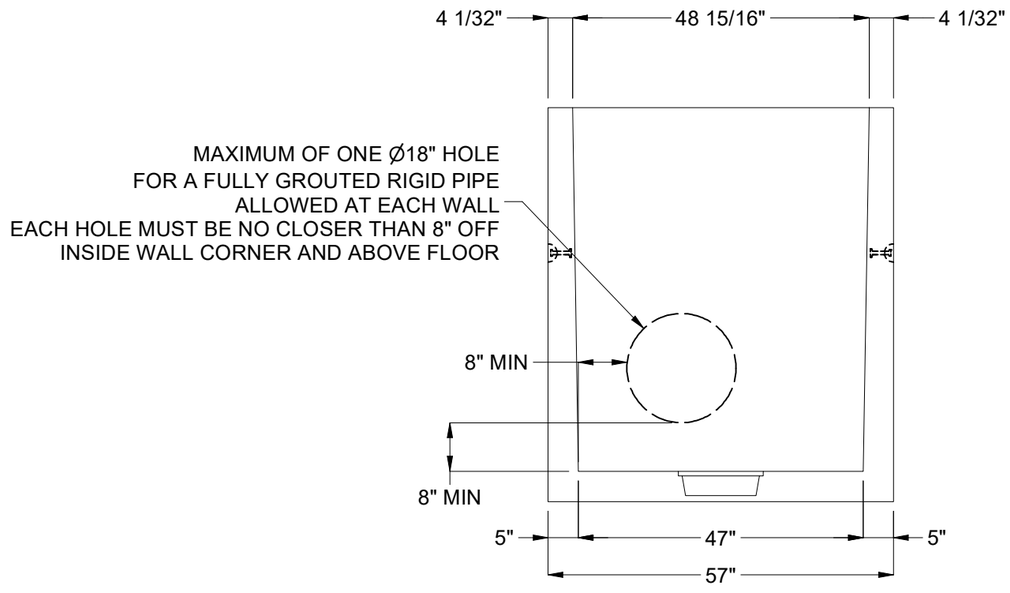

SECTION B-B

BURY DEPTH:	0.0' - 3.0' to Top		
WATER LEVEL:	8.0'	WEIGHT:	8478.77 Lbs
DESIGN SPEC:	ACI 318,ASTM C890	LOADING SPEC:	A-16 (AASHTO HS20-44)
REINFORCEMENT TYPE:	Rebar	LIFTING TYPE:	None

JENSEN PRECAST EST. 1968

WWW.JENSENPRECAST.COM

©2023 Jensen Precast- All rights reserved.
All materials appearing as Jensen Precast documents and the like are proprietary work product and are protected under U.S. copyright and other laws.
Unless in conjunction with business conducted with Jensen Precast, any use of Jensen Precast work product without express, written consent is prohibited, and recipient is prohibited from distributing any and all work product to non-approved third parties under penalty of civil action.

DESCRIPTION: Vault 4878x60 Rect. Bottom Section Core Drill Sump TMWA 557 Ext. Coating - BG2000 Waterproofing Multicoat
CASTING DRAWING

REV: D-1

PART NUMBER:	100001312	DRAWN BY:	E CAMERON
CREATED:	8/7/2020	MODIFIED:	8/21/2023

SHEET: 2 OF 2

100001312.idw