DESIGN NOTES
■ FOR COMPLETE DESIGN AND PRODUCT INFORMATION CONTACT JENSEN PRECAST.

BILL OF MATERIALS

ITEM	UNIT QTY	QTY	PART NUMBER	DESCRIPTION
1	1	1	100020454	REINFORCING MAT 100020454
2	29.891 ft^3	29.891 ft^3	100011425	CONCRETE MIX 5000 PSI
3	1	32	100003015	TERMINATOR DUCT WITH SEAL 4.5IN T4501
4	1	4	100004880	ANCHOR UTILITY .671DIA 5.625-SLAB GALV P75 6UA671
5	36.000 in	288.000 in	100007560	STRUT CONT CONCRETE INSERT 1/3/8 X 1-5/8 W/FOAMEND CAPS 2000#/FT LOAD W-7370

100001290.idw

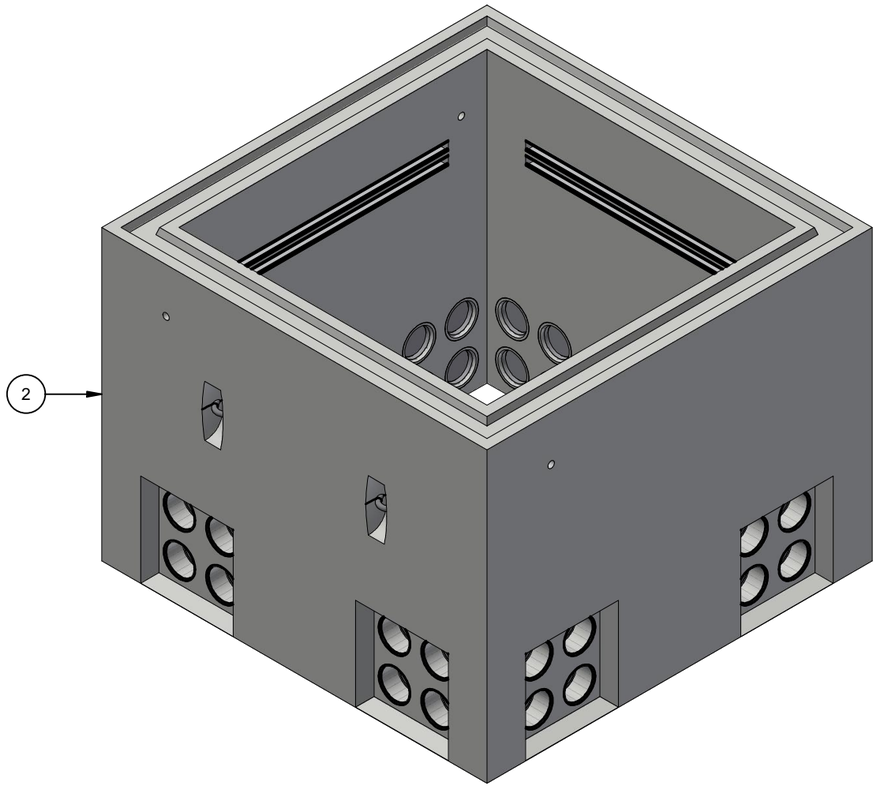

ISO LAYOUT

LIFTING NOTES
■ PLANT DEMOLDING AND FIELD INSTALLATION: MINIMUM HANDLING CONCRETE STRENGTH F'c = 2500 PSI RIGGING EQUALIZER REQUIRED TO EQUALIZE LOAD TO 4 LIFTING POINTS WITH A 90° SLING ANGLE.

BURY DEPTH:	0.0' - 5.0' to Top		
WATER LEVEL:	Below Structure	APPROX. WEIGHT:	4555.3 Lbs
DESIGN SPEC:	ACI 318,ASTM C857	LOADING SPEC:	A-16 (AASHTO HS20-44)
REINFORCEMENT TYPE:	Rebar	LIFTING TYPE:	A-Anchor

JENSEN PRECAST EST. 1968

WWW.JENSENPRECAST.COM

©2022 Jensen Precast- All rights reserved.
All materials appearing as Jensen Precast documents and the like are proprietary work product and are protected under U.S. copyright and other laws.
Unless in conjunction with business conducted with Jensen Precast, any use of Jensen Precast work product without express, written consent is prohibited, and recipient is prohibited from distributing any and all work product to non-approved third parties under penalty of civil action.

CHANGE HISTORY			
NO.	DESCRIPTION	DATE	BY
1	INITIAL RELEASE	8/4/2022	DF
2	ADDED GROUNDING HOLES	7/30/2024	J.R.
3			

DESCRIPTION: Intercept Riser 4848x45 Terminators,Opening

CASTING LAYOUT

REV: B-1

PART NUMBER:	100001290	DRAWN BY:	D. Frazier
CREATED:	7/28/2022	MODIFIED:	8/4/2022

SHEET: 1 OF 2

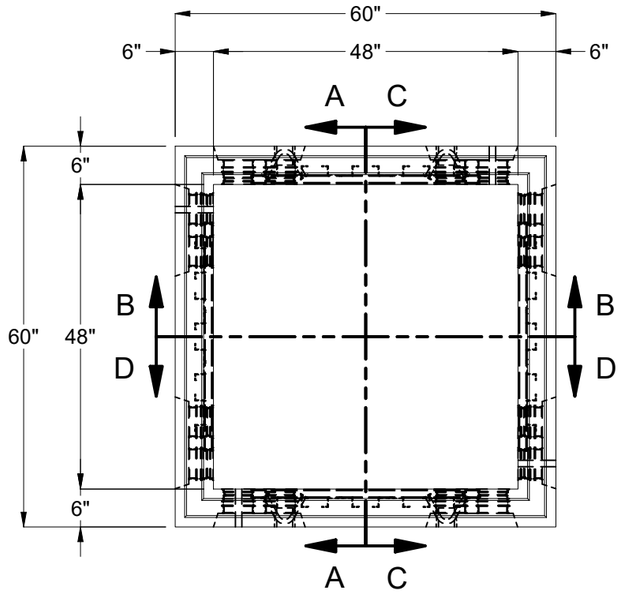

PLAN VIEW

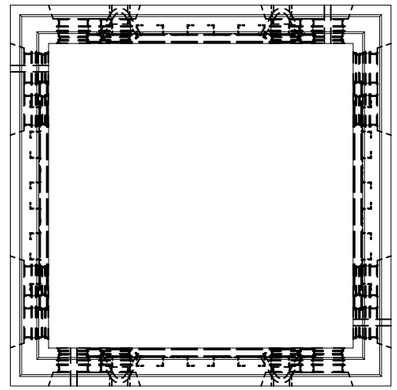

PLAN VIEW
(SHOWING OBJECT DIMENSIONS)

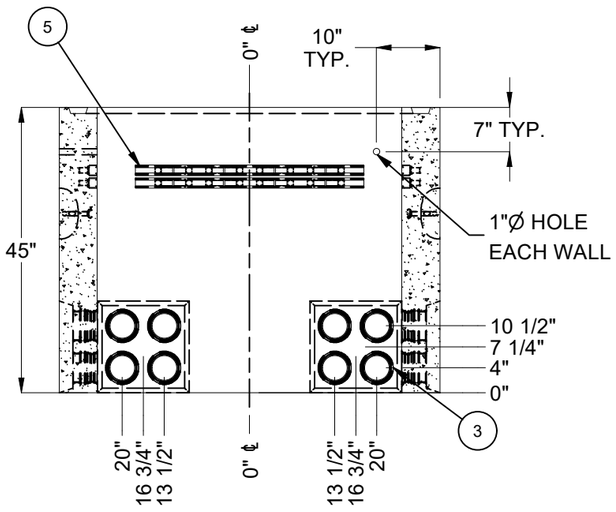

SECTION A-A

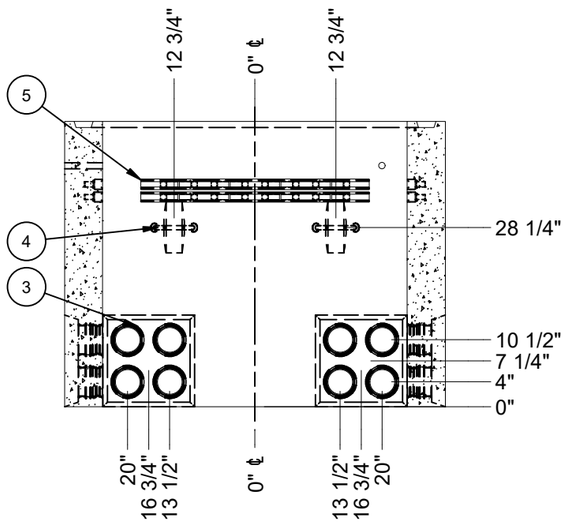

SECTION B-B

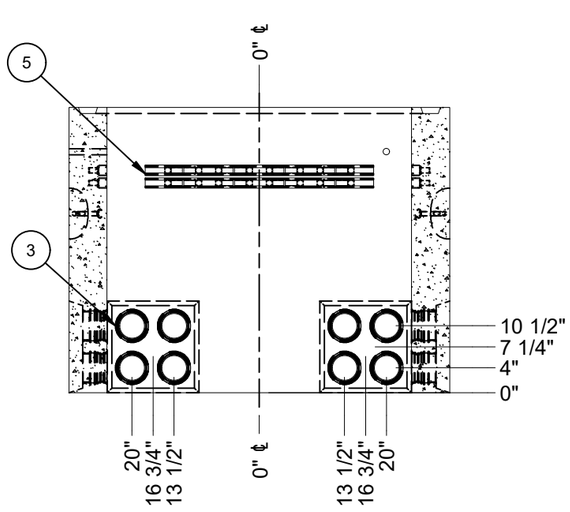

SECTION C-C

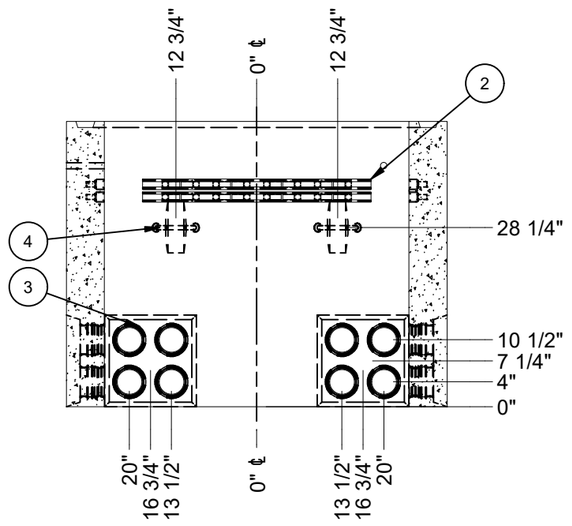

SECTION D-D

BURY DEPTH:	0.0' - 5.0' to Top		
WATER LEVEL:	Below Structure	APPROX. WEIGHT:	4555.3 Lbs
DESIGN SPEC:	ACI 318,ASTM C857	LOADING SPEC:	A-16 (AASHTO HS20-44)
REINFORCEMENT TYPE:	Rebar	LIFTING TYPE:	A-Anchor

JENSEN PRECAST EST. 1968

WWW.JENSENPRECAST.COM

©2022 Jensen Precast- All rights reserved.
All materials appearing as Jensen Precast documents and the like are proprietary work product and are protected under U.S. copyright and other laws.
Unless in conjunction with business conducted with Jensen Precast, any use of Jensen Precast work product without express, written consent is prohibited, and recipient is prohibited from distributing any and all work product to non-approved third parties under penalty of civil action.

DESCRIPTION:	Intercept Riser 4848x45 Terminators,Opening CASTING DRAWING		REV: B-1
PART NUMBER:	100001290	DRAWN BY:	D. Frazier
CREATED:	7/28/2022	MODIFIED:	8/4/2022
			SHEET: 2 OF 2

100001290.idw