DESIGN NOTES
■ FOR COMPLETE DESIGN AND PRODUCT INFORMATION CONTACT JENSEN PRECAST.

BILL OF MATERIALS

ITEM	UNIT QTY	QTY	PART NUMBER	DESCRIPTION
1	1	1	400001736	REINFORCING MAT 400001736
2	4.738 ft^3	4.738 ft^3	100011425	CONCRETE MIX GENERIC 5000 PSI
3	1	4	100002767	Insert Ferrule Loop 0.75 x 3.5" Zinc (F42 or Equiv.)

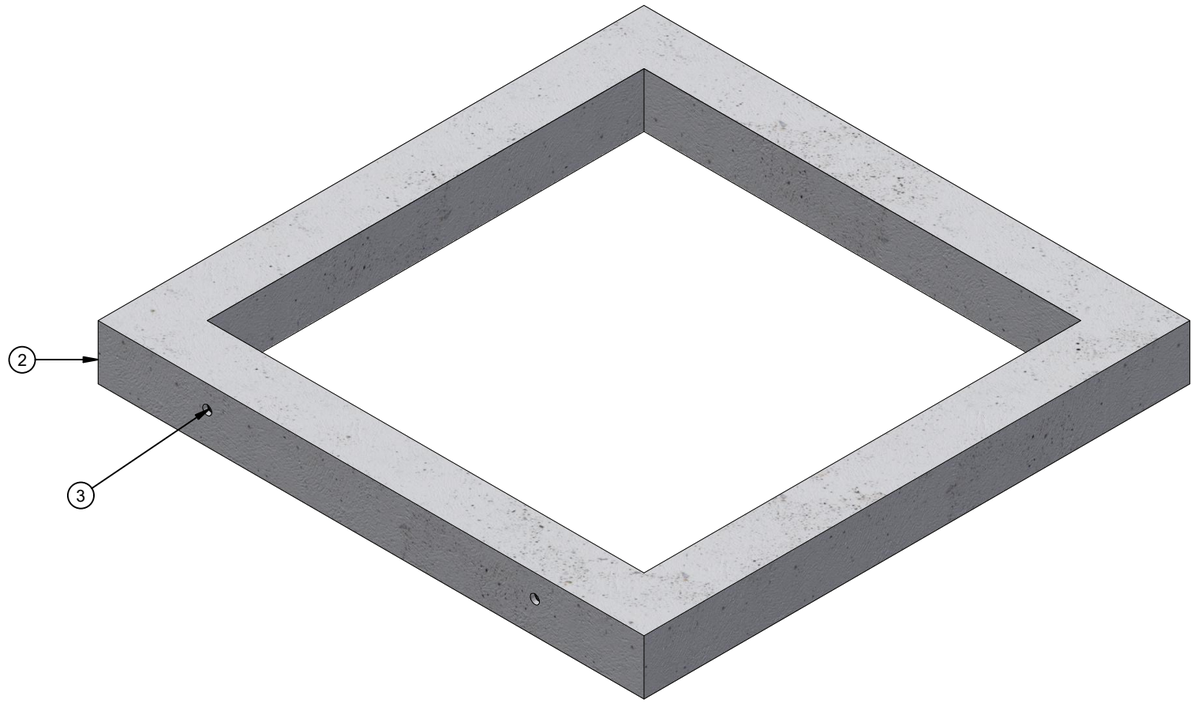

ISO LAYOUT

LIFTING NOTES
■ PLANT DEMOLDING AND FIELD INSTALLATION: MINIMUM HANDLING CONCRETE STRENGTH F'c = 2500 PSI RIGGING EQUALIZER REQUIRED TO EQUALIZE LOAD TO 2 LIFTING POINTS WITH A 45° SLING ANGLE.

REVISION HISTORY			
REV	DESCRIPTION	DATE	BY
A	INITIAL RELEASE		

BURY DEPTH:	0.0' - 10.0' to Top		
WATER LEVEL:	0.0'	WEIGHT:	662.38 Lbs
DESIGN SPEC:	ASTM C890,ACI 318	LOADING SPEC:	A-16 (AASHTO HS20-44)
REINFORCEMENT TYPE:	Rebar	LIFTING TYPE:	Insert

JENSEN PRECAST EST. 1968

WWW.JENSENPRECAST.COM

©2019 Jensen Precast- All rights reserved.
All materials appearing as Jensen Precast documents and the like are proprietary work product and are protected under U.S. copyright and other laws.
Unless in conjunction with business conducted with Jensen Precast, any use of Jensen Precast work product without express, written consent is prohibited, and recipient is prohibited from distributing any and all work product to non-approved third parties under penalty of civil action.

DESCRIPTION:	Riser 4848x6 Rect. Riser CASTING LAYOUT		REV: B
PART NUMBER:	100001286	DRAWN BY:	jawar9
CREATED:	11/15/2019	MODIFIED:	5/4/2021
			SHEET: 1 OF 2

100001286.idw

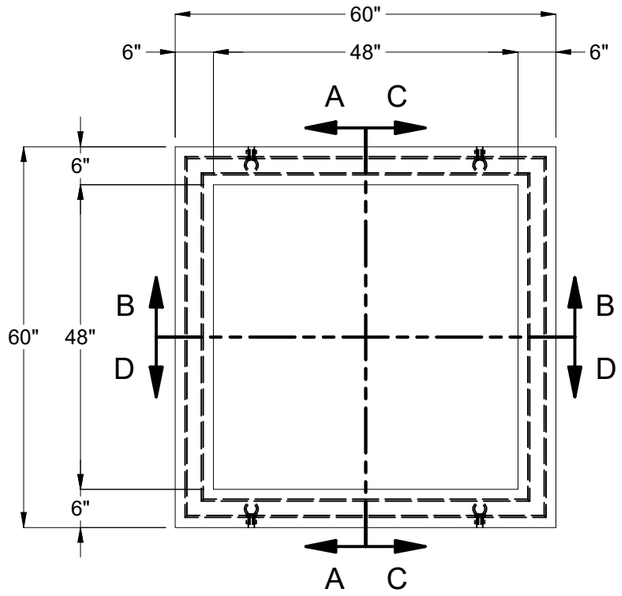

PLAN VIEW

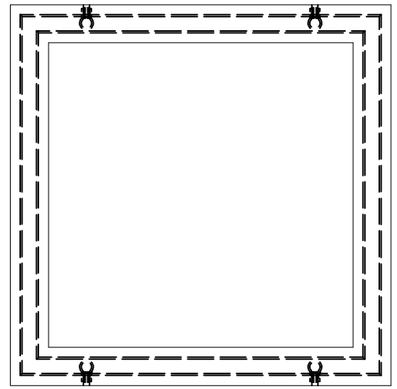

PLAN VIEW
(SHOWING OBJECT DIMENSIONS)

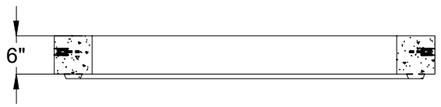

SECTION A-A

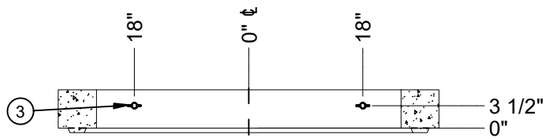

SECTION B-B



SECTION C-C

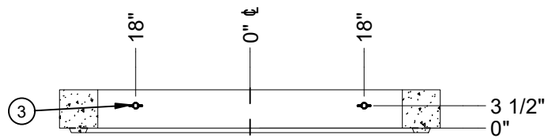

SECTION D-D

BURY DEPTH:	0.0' - 10.0' to Top		
WATER LEVEL:	0.0'	WEIGHT:	662.38 Lbs
DESIGN SPEC:	ASTM C890,ACI 318	LOADING SPEC:	A-16 (AASHTO HS20-44)
REINFORCEMENT TYPE:	Rebar	LIFTING TYPE:	Insert

JENSEN PRECAST EST. 1968

WWW.JENSENPRECAST.COM

©2019 Jensen Precast- All rights reserved.
All materials appearing as Jensen Precast documents and the like are proprietary work product and are protected under U.S. copyright and other laws.
Unless in conjunction with business conducted with Jensen Precast, any use of Jensen Precast work product without express, written consent is prohibited, and recipient is prohibited from distributing any and all work product to non-approved third parties under penalty of civil action.

DESCRIPTION:	Riser 4848x6 Rect. Riser CASTING DRAWING		REV: B
PART NUMBER:	100001286	DRAWN BY:	jawar9
CREATED:	11/15/2019	MODIFIED:	5/4/2021
			SHEET: 2 OF 2

100001286.idw