NOTES
■ FOR COMPLETE DESIGN AND PRODUCT INFORMATION CONTACT JENSEN PRECAST.

BILL OF MATERIALS

ITEM	QTY	PART NUMBER	DESCRIPTION
1	39.608 ft^3	100011425	CONCRETE MIX GENERIC 5000 PSI
2	4	100004880	ANCHOR UTILITY .671DIA 5.625-SLAB GALV P75 6UA671
3	1	100019097	REINFORCING MAT 100019097

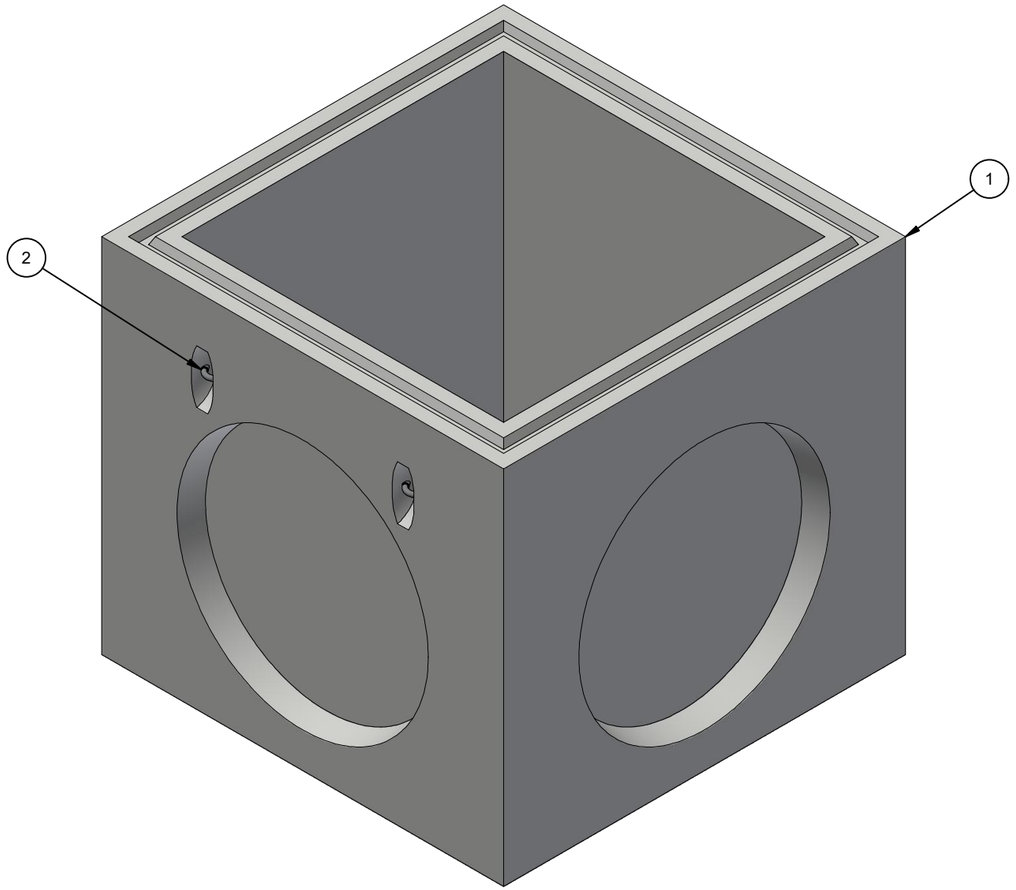

ISO LAYOUT

LIFTING NOTES
■ PLANT DEMOLDING: MINIMUM HANDLING CONCRETE STRENGTH F'c = 2500 PSI RIGGING EQUALIZER REQUIRED TO EQUALIZE LOAD TO 4 LIFTING POINTS WITH A SLING ANGLE BETWEEN 60 AND 90 DEGREES
■ FIELD INSTALLATION: MINIMUM HANDLING CONCRETE STRENGTH F'c = 3000 PSI RIGGING EQUALIZER REQUIRED TO EQUALIZE LOAD TO 2 LIFTING POINTS WITH A 60 DEGREE SLING ANGLE

CHANGE HISTORY			
NO.	DESCRIPTION	DATE	BY
1	DRAWING CREATED	12/2/2020	CMK

BURY DEPTH:	0.0' - 3.1' to Top		
WATER LEVEL:	5.0'	APPROX. WEIGHT:	5957.19 Lbs
DESIGN SPEC:	ASTM C890,ACI 318	LOADING SPEC:	A-16 (AASHTO HS20-44)
REINFORCEMENT TYPE:	Rebar	LIFTING TYPE:	SP Socket

JENSEN PRECAST EST. 1968

WWW.JENSENPRECAST.COM

©2022 Jensen Precast- All rights reserved.
All materials appearing as Jensen Precast documents and the like are proprietary work product and are protected under U.S. copyright and other laws.
Unless in conjunction with business conducted with Jensen Precast, any use of Jensen Precast work product without express, written consent is prohibited, and recipient is prohibited from distributing any and all work product to non-approved third parties under penalty of civil action.

DESCRIPTION: Drainage 4848x48 Rect. Bottom Section Knockout

CASTING LAYOUT

PART NUMBER:	100001280	DRAWN BY:	E. Fine
CREATED:	10/13/2017	MODIFIED:	7/22/2022

REV: B-1

SHEET: 1 OF 2

100001280.idw

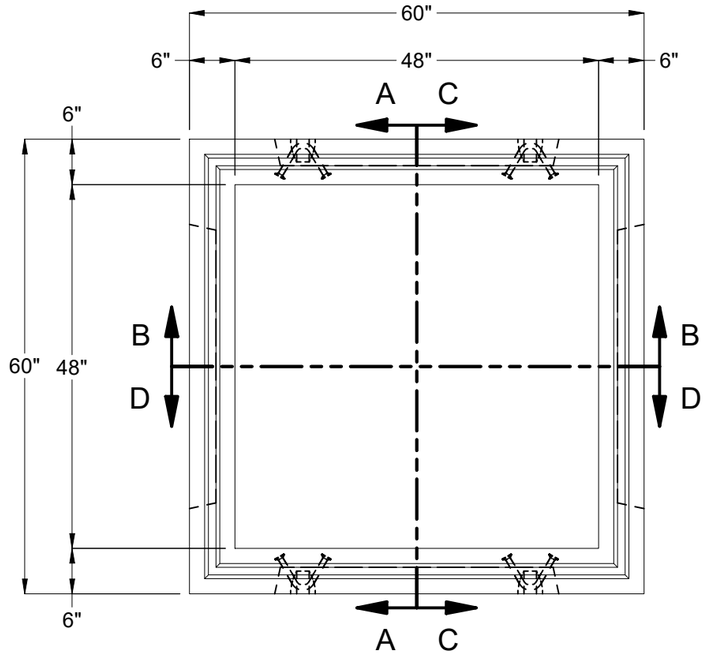

PLAN VIEW

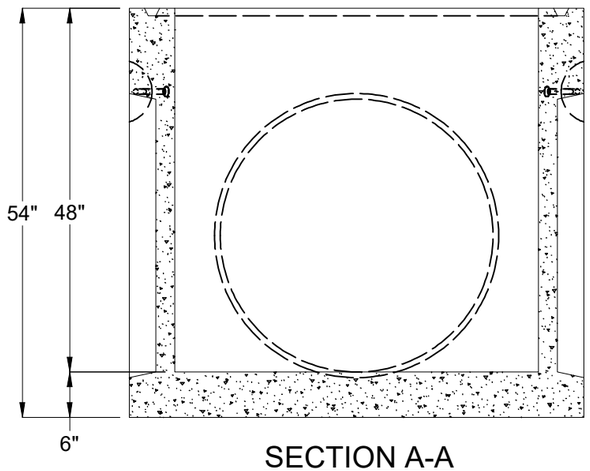

SECTION A-A

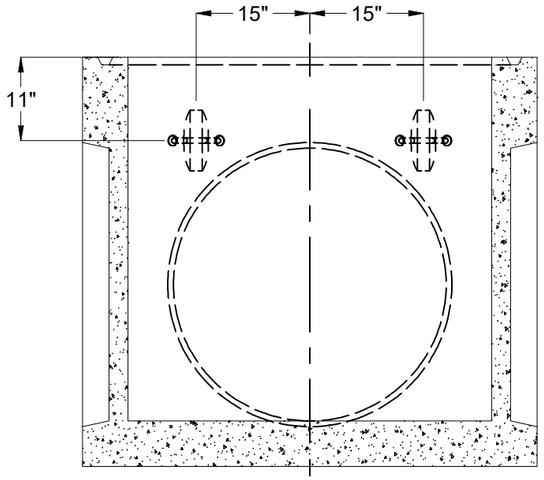

SECTION B-B

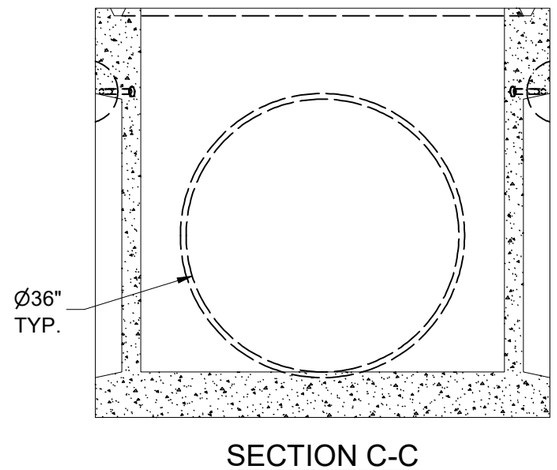

SECTION C-C

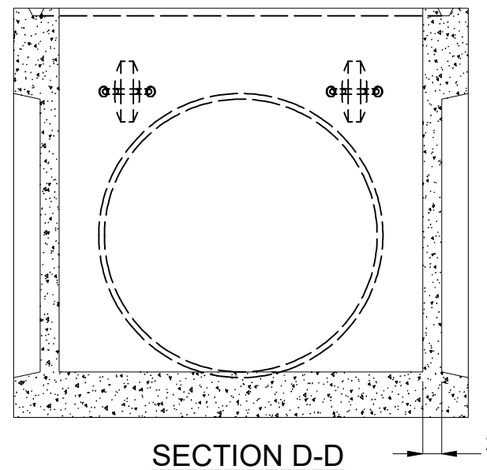

SECTION D-D

BURY DEPTH:	0.0' - 3.1' to Top		
WATER LEVEL:	5.0'	APPROX. WEIGHT:	5957.19 Lbs
DESIGN SPEC:	ASTM C890,ACI 318	LOADING SPEC:	A-16 (AASHTO HS20-44)
REINFORCEMENT TYPE:	Rebar	LIFTING TYPE:	SP Socket

JENSEN PRECAST EST. 1968

WWW.JENSENPRECAST.COM

©2022 Jensen Precast- All rights reserved.
All materials appearing as Jensen Precast documents and the like are proprietary work product and are protected under U.S. copyright and other laws.
Unless in conjunction with business conducted with Jensen Precast, any use of Jensen Precast work product without express, written consent is prohibited, and recipient is prohibited from distributing any and all work product to non-approved third parties under penalty of civil action.

DESCRIPTION: Drainage 4848x48 Rect. Bottom Section Knockout

CASTING DRAWING

REV: B-1

PART NUMBER:	100001280	DRAWN BY:	E. Fine
CREATED:	10/13/2017	MODIFIED:	7/22/2022

SHEET: 2 OF 2

100001280.idw