NOTES
■ FOR COMPLETE DESIGN AND PRODUCT INFORMATION CONTACT JENSEN PRECAST.

BILL OF MATERIALS

ITEM	UNIT QTY	QTY	PART NUMBER	DESCRIPTION
1	28.493 ft^3	28.493 ft^3	100023549	CONCRETE 5000 PSI 36 SCC ADOT
2	1	48	100003011	TERMINATOR DUCT WITH SEAL 3IN SHORT T3000
3	1	4	100005910	PULL IRON CABLE 9X27 MB BPI-1
4	1	4	100002872	ANCHOR DOGBONE P52 4T X 3-3/4" GALV
5	1	4	100004878	ANCHOR UTILITY .671DIA 5-SLAB GALV P75 5UA671
6	1	4	100006091	STRUT C-CHANNEL CONCRETE INSERT 1-5/8 X 1-5/8 12GA W/ANCHORS N-3200 24IN GALV
7	1	8	100009222	UNISTRUT MOUNTING CLIP N-200 PLAIN
8	1	1	300126944	REINFORCING MAT 300126944

100001264.idw

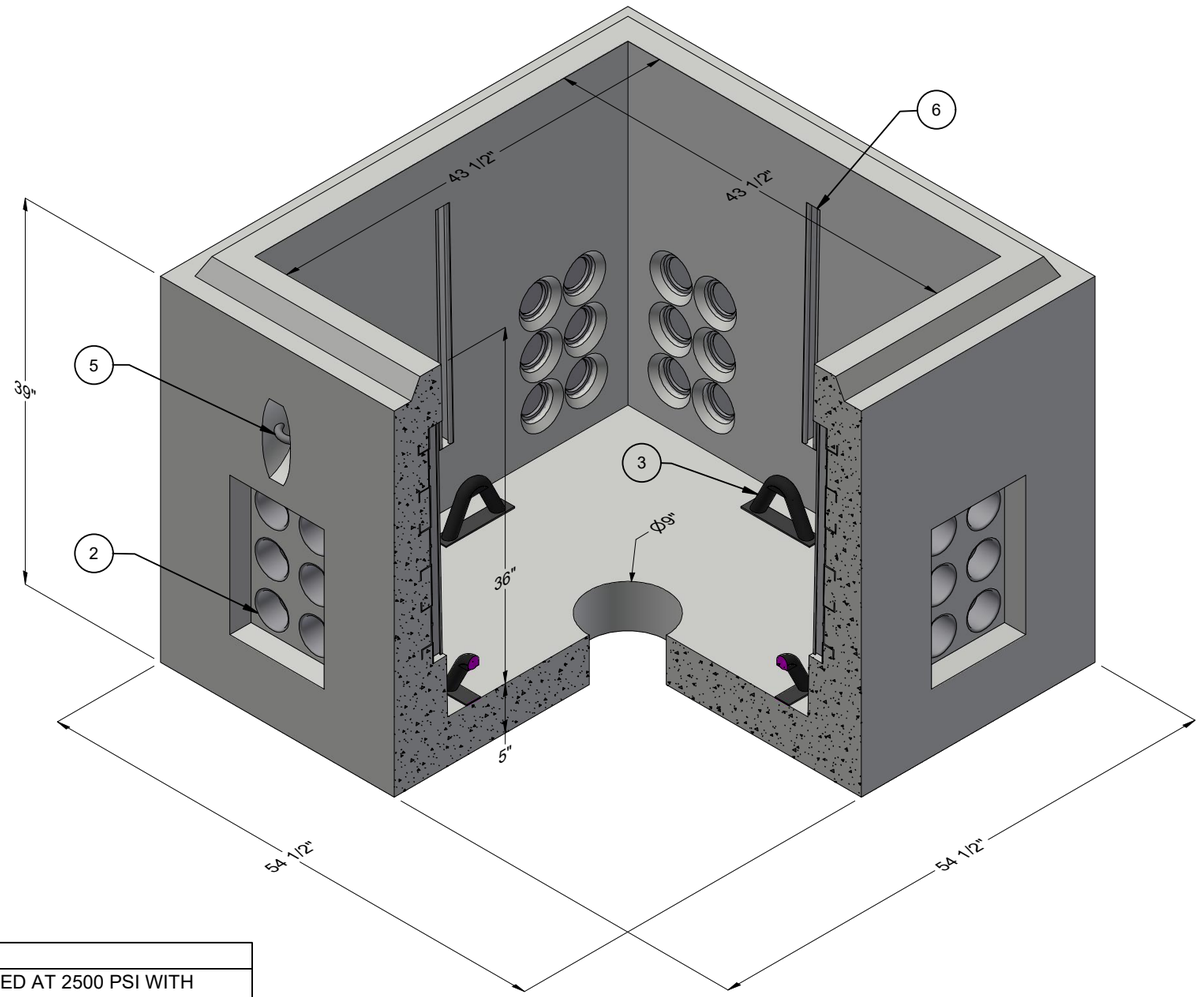

ISO REF

LIFTING NOTES
■ DEMOLDING: THIS CONCRETE PRODUCT IS DESIGNED TO BE LIFTED AT 2500 PSI WITH 4 LIFT CONNECTIONS EQUALLY LOADED TO 2 LIFTING POINTS AT A MINIMUM 60° SLING ANGLE, MEASURED FROM HORIZONTAL.
■ INSTALLATION: THIS CONCRETE PRODUCT IS DESIGNED TO BE LIFTED AT 2500 PSI WITH 4 LIFT CONNECTIONS EQUALLY LOADED TO 2 LIFTING POINTS AT 90° SLING ANGLE, MEASURED FROM HORIZONTAL.

CHANGE HISTORY			
NO.	DESCRIPTION	DATE	BY
A	LEGACY DRAWING	-	-
B	REVISION - LIFTING AND REINFORCING	9/15/22	MLR/RM

BURY DEPTH:	0.0' - 4.0' to Top		
WATER LEVEL:	Below Structure	APPROX. WEIGHT:	4339.85 Lbs
DESIGN SPEC:	ASTM C857,ACI 318	LOADING SPEC:	A-16 (AASHTO HS20-44)
REINFORCEMENT TYPE:	Rebar	LIFTING TYPE:	A-Anchor

JENSEN PRECAST EST. 1968

WWW.JENSENPRECAST.COM

©2022 Jensen Precast- All rights reserved.
All materials appearing as Jensen Precast documents and the like are proprietary work product and are protected under U.S. copyright and other laws.
Unless in conjunction with business conducted with Jensen Precast, any use of Jensen Precast work product without express, written consent is prohibited, and recipient is prohibited from distributing any and all work product to non-approved third parties under penalty of civil action.

DESCRIPTION:	Vault 4242x36 Rect. Bottom Section Terminators Sump ADOT FMS CASTING LAYOUT		REV: B-2
PART NUMBER:	100001264	DRAWN BY:	MLR
CREATED:	9/7/2016	MODIFIED:	9/15/2022
			SHEET: 1 OF 2

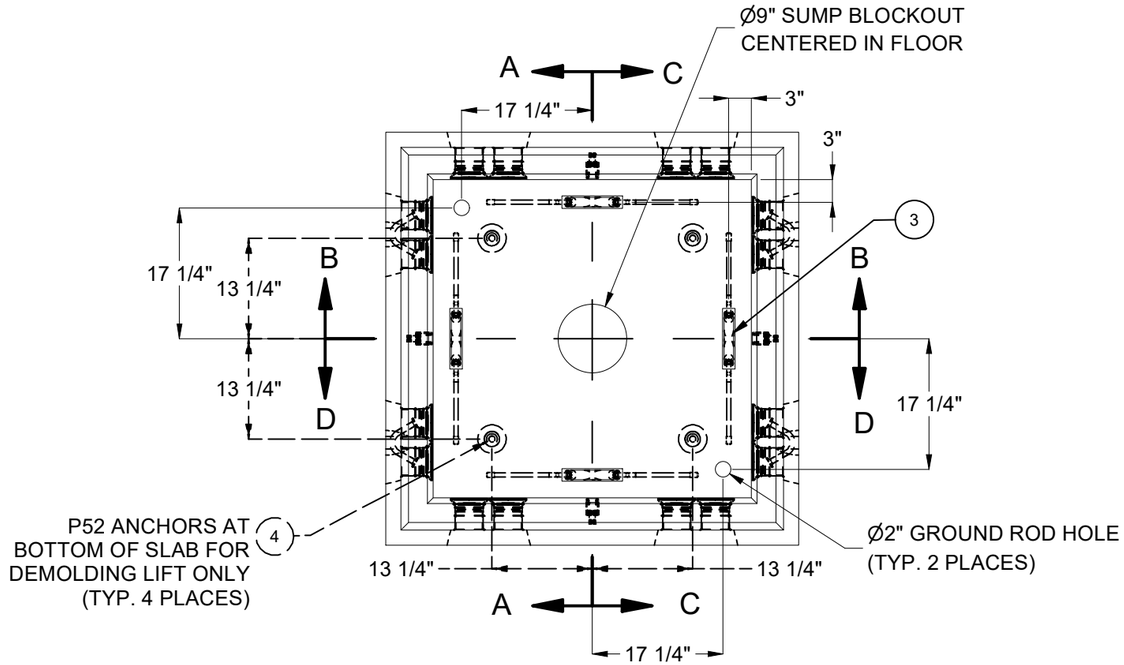

PLAN VIEW

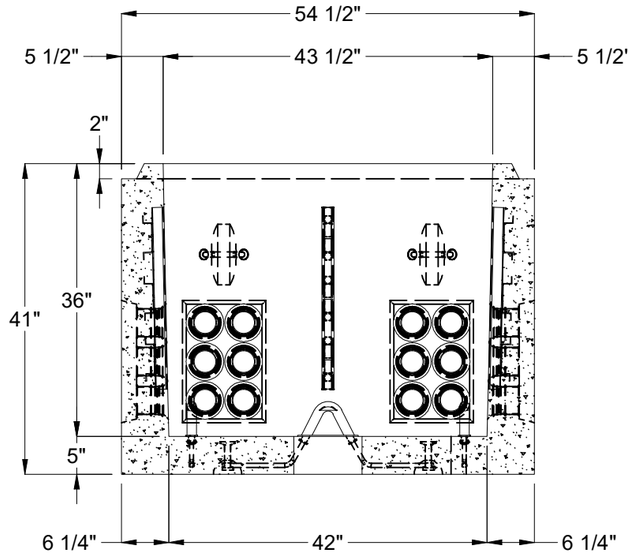

SECTION A-A

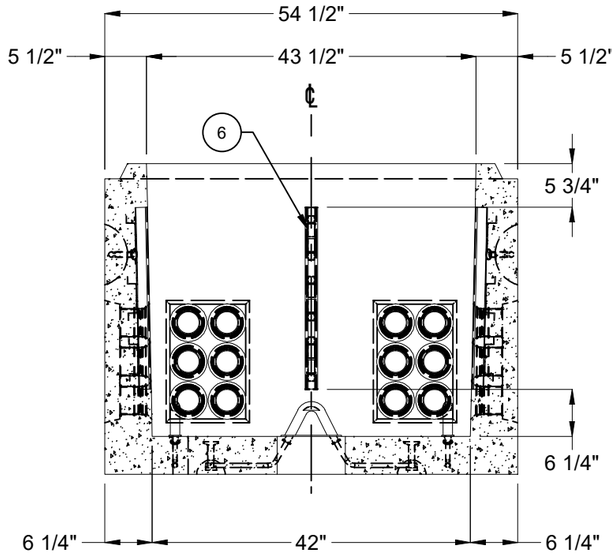

SECTION B-B

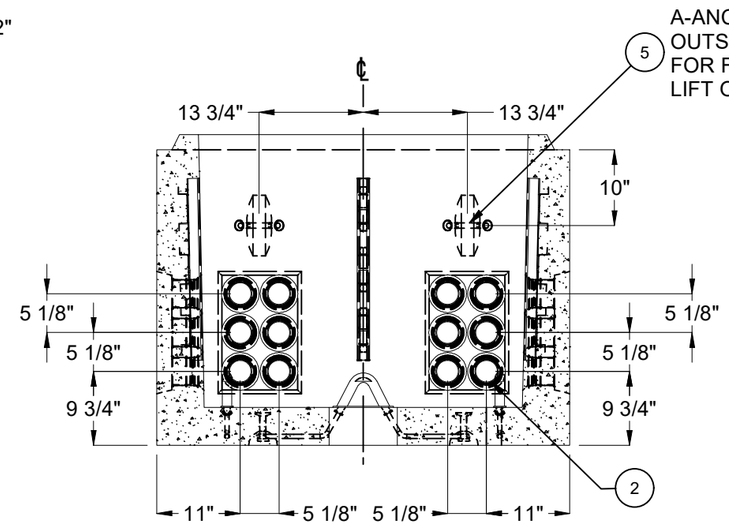

SECTION C-C

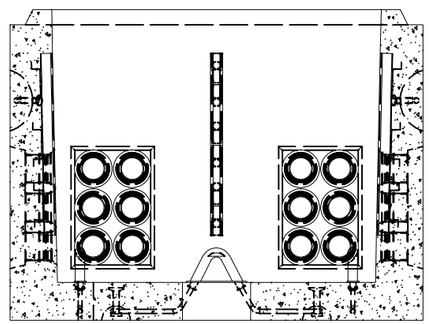

SECTION D- D

BURY DEPTH:	0.0' - 4.0' to Top		
WATER LEVEL:	Below Structure	APPROX. WEIGHT:	4339.85 Lbs
DESIGN SPEC:	ASTM C857,ACI 318	LOADING SPEC:	A-16 (AASHTO HS20-44)
REINFORCEMENT TYPE:	Rebar	LIFTING TYPE:	A-Anchor

JENSEN PRECAST EST. 1968

WWW.JENSENPRECAST.COM

©2022 Jensen Precast- All rights reserved.
All materials appearing as Jensen Precast documents and the like are proprietary work product and are protected under U.S. copyright and other laws.
Unless in conjunction with business conducted with Jensen Precast, any use of Jensen Precast work product without express, written consent is prohibited, and recipient is prohibited from distributing any and all work product to non-approved third parties under penalty of civil action.

DESCRIPTION:	Vault 4242x36 Rect. Bottom Section Terminators Sump ADOT FMS CASTING DRAWING		REV: B-2
PART NUMBER:	100001264	DRAWN BY:	MLR
CREATED:	9/7/2016	MODIFIED:	9/15/2022
			SHEET: 2 OF 2

100001264.idw