DESIGN NOTES:

- CONCRETE SHALL HAVE A 28 DAY MINIMUM COMPRESSIVE STRENGTH OF 5000 PSI
- SOIL UNIT WEIGHT DRY - 110 lbs/cu.ft.
- EQUIVALENT LATERAL PRESSURE DRY - 40 lbs/cu.ft.
- SOIL UNIT WEIGHT WET - 120 lbs/cu.ft.
- EQUIVALENT LATERAL PRESSURE WET - 80 lbs/cu.ft.

PRODUCTION NOTES:

- LIFTING INSERTS SHALL BE INSTALLED PER MANUFACTURER'S REQUIREMENTS
- APPLIED FINISH - NONE
- INTERNAL LINER/COATING - NONE
- EXTERNAL LINER/COATING - NONE

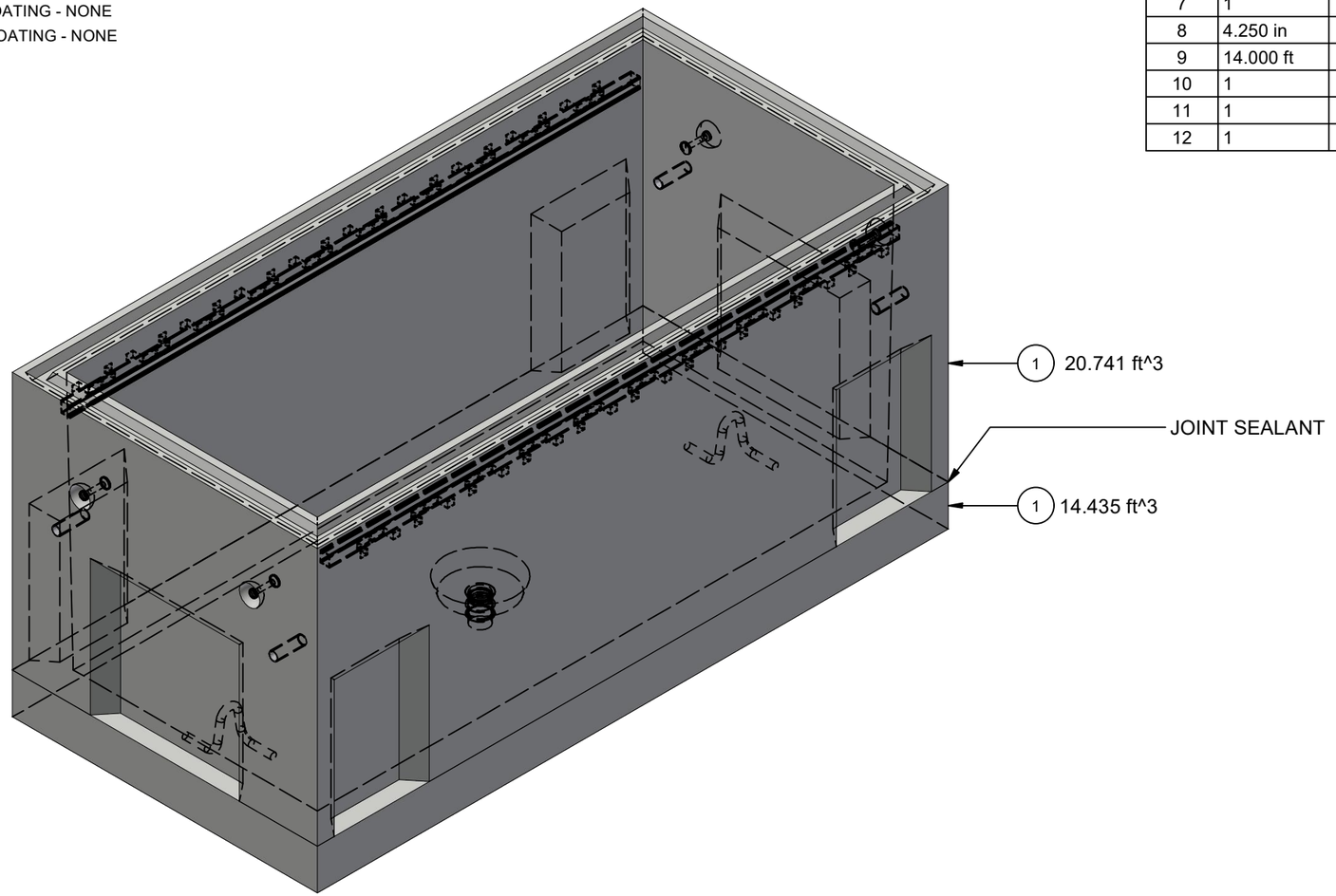

ISO VIEW

BILL OF MATERIALS

ITEM	UNIT QTY	QTY	PART NUMBER	DESCRIPTION
1	*Varies*	35.700 ft^3	100011425	CONCRETE MIX GENERIC 5000 PSI
2	1	1	100019323	REINFORCING MAT 100019323
3	4.000 ul	4.000 ul	100013648	SEALANT JOINT BUTYL RUBBER ASTM C-990 AND M198 CS-102 1IN EQUIV X14.5FT PER ROLL
4	1	20	100008458	MOLD NAILS #30401
5	1	10	100009222	UNISTRUT MOUNTING CLIP N-200 PLAIN
6	1	8	100013427	WHEEL CHAIR SPACER 1-1/2IN 30541
7	1	1	100014034	TERMINATOR DUCT WITH SEAL 2IN SHORT T2000
8	4.250 in	17.000 in	100013763	PIPE PVC SCH 40 1IN DIA
9	14.000 ft	14.000 ft	100028211	Closed Cell Backer Rod 1.25" Solid
10	1	4	100002867	ANCHOR DOGBONE P52 2T X 3-3/8" GALV
11	1	2	100005927	PULL IRON OFFSET .875DIA 5.875 IH X 9.125L X 4.75W GALV
12	1	2	100008456	STRUT CONT CONCRETE INSERT 1-5/8 x 1-5/8 W/FOAM & ENDCAPS 7FT

100001256.idw

LIFTING NOTES
■ THIS CONCRETE PRODUCT IS DESIGNED TO BE LIFTED AT 3500 PSI WITH 4 LIFT CONNECTIONS EQUALLY LOADED TO 2 LIFTING POINTS AT A MINIMUM 60° SLING ANGLE, MEASURED FROM HORIZONTAL.
*All rigging shall be design by a qualified professional. Loading diagrams show illustrations of possible rigging setups to achieve the required sling angle and load leg equalization. Other valid rigging configurations are possible. A qualified professional must be consulted prior to lifting.

RIGGING DIAGRAM*	B

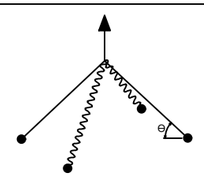

BURY DEPTH:	0.0' - 3.0' to Top		
WATER LEVEL:	5.0'	APPROX. WEIGHT:	5408 Lbs
DESIGN SPEC:	ACI 318,ASTM C857	LOADING SPEC:	A-16 (AASHTO HS20-44)
REINFORCEMENT TYPE:	Rebar	LIFTING TYPE:	Dogbone

JENSEN PRECAST EST. 1968

WWW.JENSENPRECAST.COM

©2024 Jensen Precast- All rights reserved.
All materials appearing as Jensen Precast documents and the like are proprietary work product and are protected under U.S. copyright and other laws.
Unless in conjunction with business conducted with Jensen Precast, any use of Jensen Precast work product without express, written consent is prohibited, and recipient is prohibited from distributing any and all work product to non-approved third parties under penalty of civil action.

CHANGE HISTORY

NO.	DESCRIPTION	DATE	BY
1	ASSEMBLE PACKAGE PART FROM IFS BOM	03/25/2024	EDC
5	PRODUCTION RELEASE	06/18/2024	EDC
6			

DESCRIPTION: Intercept Riser 3684x38 Knockout Racking NV Energy RS-85

CASTING LAYOUT

REV: A-5

SHEET: 1 OF 2

PART NUMBER:	100001256	DRAWN BY:	E CAMERON
CREATED:	2/26/2024	MODIFIED:	6/18/2024

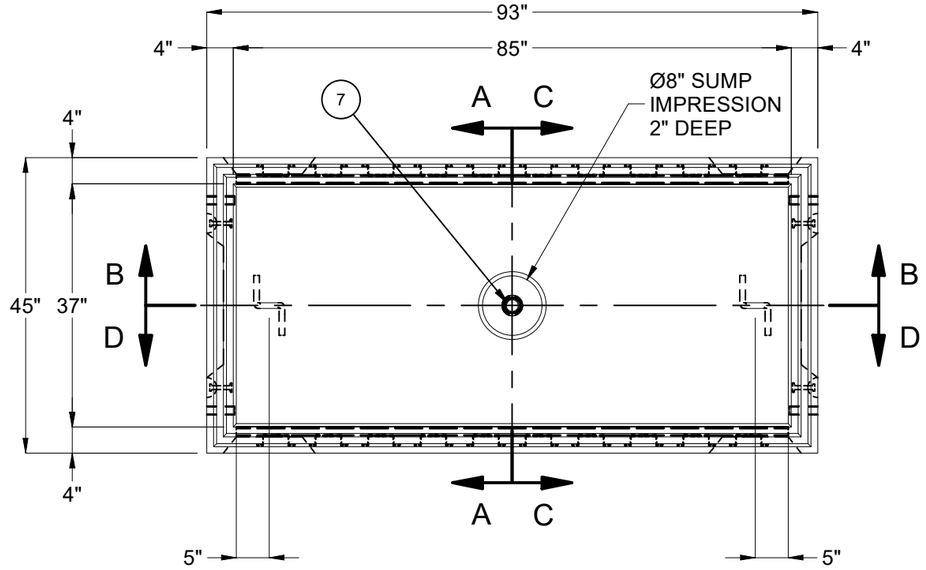

PLAN VIEW

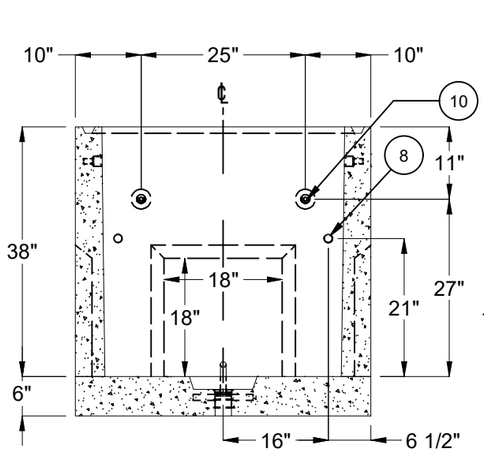

SECTION A-A

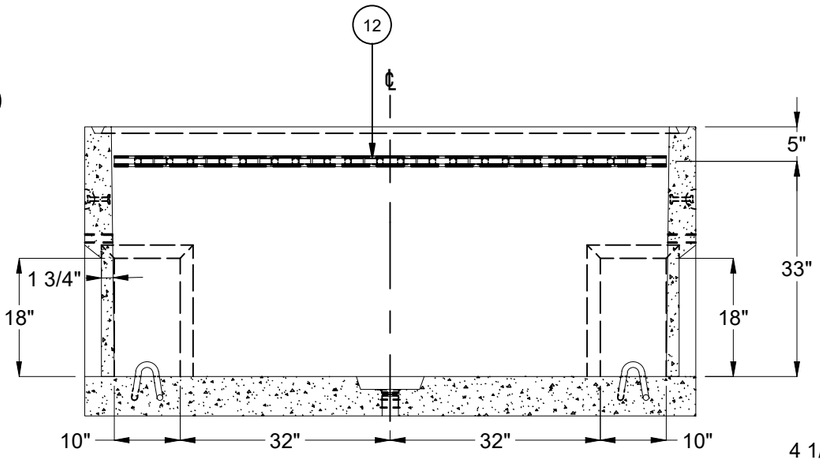

SECTION B-B

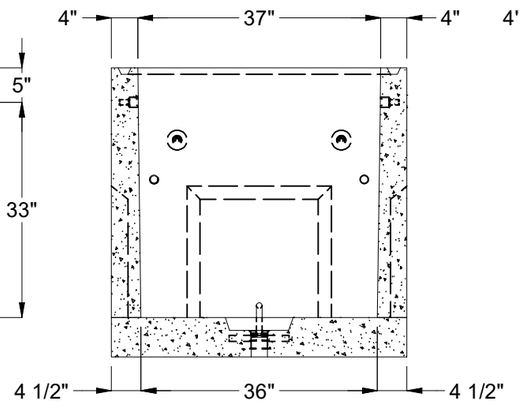

SECTION C-C

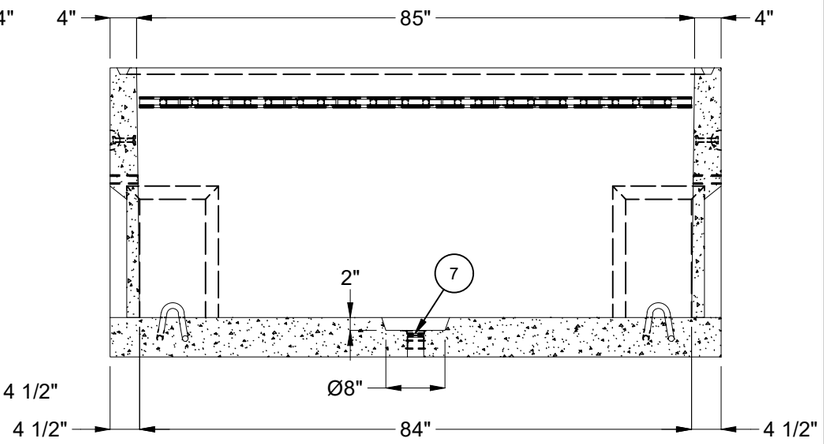

SECTION D-D

BURY DEPTH:	0.0' - 3.0' to Top		
WATER LEVEL:	5.0'	APPROX. WEIGHT:	5408 Lbs
DESIGN SPEC:	ACI 318,ASTM C857	LOADING SPEC:	A-16 (AASHTO HS20-44)
REINFORCEMENT TYPE:	Rebar	LIFTING TYPE:	Dogbone

JENSEN PRECAST EST. 1968

WWW.JENSENPRECAST.COM

©2024 Jensen Precast- All rights reserved.
All materials appearing as Jensen Precast documents and the like are proprietary work product and are protected under U.S. copyright and other laws.
Unless in conjunction with business conducted with Jensen Precast, any use of Jensen Precast work product without express, written consent is prohibited, and recipient is prohibited from distributing any and all work product to non-approved third parties under penalty of civil action.

DESCRIPTION:	Intercept Riser 3684x38 Knockout Racking NV Energy RS-85 CASTING DRAWING		REV: A-5
PART NUMBER:	100001256	DRAWN BY:	E CAMERON
CREATED:	2/26/2024	MODIFIED:	6/18/2024
			SHEET: 2 OF 2

100001256.idw