DESIGN NOTES:

- CONCRETE SHALL HAVE A 28 DAY MINIMUM COMPRESSIVE STRENGTH OF 5000 PSI
- SOIL UNIT WEIGHT DRY - 110 lbs/cu.ft.
- EQUIVALENT LATERAL PRESSURE DRY - 40 lbs/cu.ft.
- SOIL UNIT WEIGHT WET - 120 lbs/cu.ft.
- EQUIVALENT LATERAL PRESSURE WET - 80 lbs/cu.ft.

PRODUCTION NOTES:

- THIS PRODUCT SHALL ONLY BE PRODUCED IN A JENSEN PRECAST FACILITY
- LIFTING INSERTS SHALL BE INSTALLED PER MANUFACTURER'S REQUIREMENTS
- APPLIED FINISH - BROOMED
- INTERNAL LINER/COATING - NONE
- EXTERNAL LINER/COATING - NONE

BILL OF MATERIALS

ITEM	UNIT QTY	QTY	PART NUMBER	DESCRIPTION
1	14.800 ft^3	14.800 ft^3	100011425	CONCRETE MIX GENERIC 5000 PSI
3	1	4	100002854	INSERT MH RUNG PLASTIC SP SOCKET
4	1	1	100020433	REINFORCING MAT 100020433
5	1	1	100002452	FAS-1635-CD1-G-SAC-OH04-(TYPE J)
6	1	1	100002453	HOOD STEEL TOP TYPE J
7	1	1	200072485	Plug Cover D24x3 Cast-In Frame
8	1	1	100002463	FAS-2121-CD-G-OH03-ROUND
9	1	1	100006984	CI GRATE 17.5X40 FA-8543-02 TYPE B/C W/CHAIN (IMPORT) NATIONAL

100001215.idw

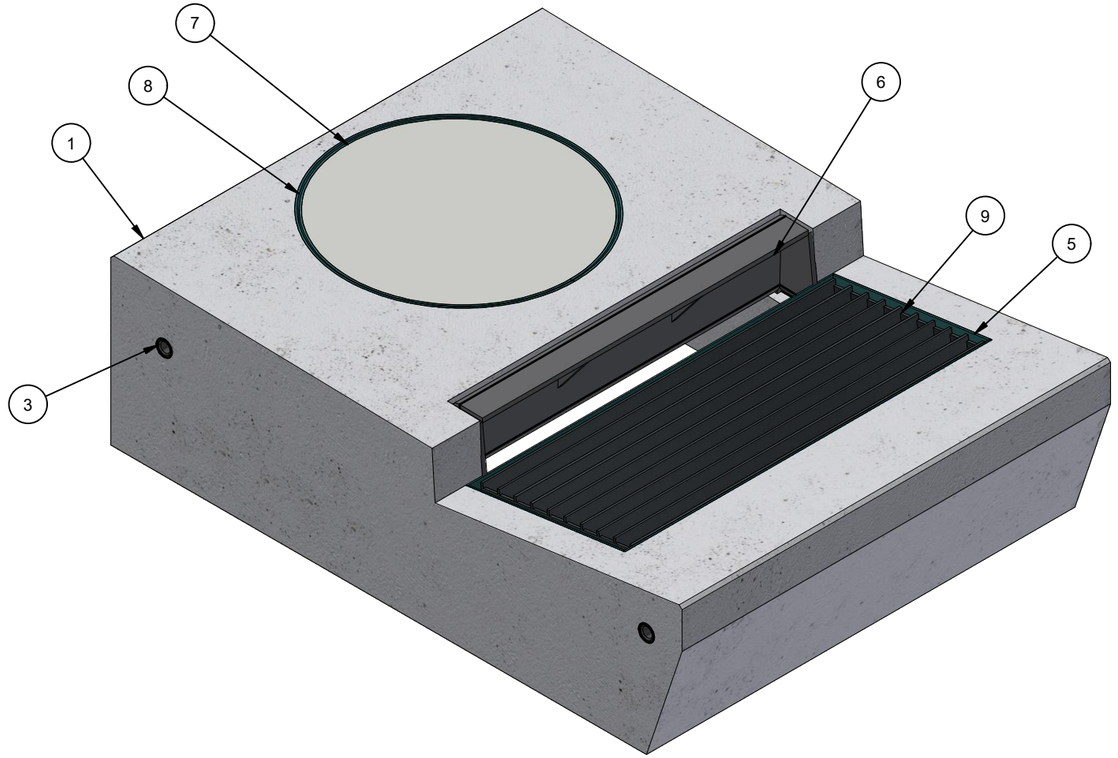

ISO VIEW

LIFTING NOTES

■ THIS CONCRETE PRODUCT IS DESIGNED TO BE LIFTED AT 2500 PSI WITH 4 LIFT CONNECTIONS EQUALLY LOADED TO 2 LIFTING POINTS AT A MINIMUM 60° SLING ANGLE, MEASURED FROM HORIZONTAL.

*All rigging shall be design by a qualified professional. Loading diagrams show illustrations of possible rigging setups to achieve the required sling angle and load leg equalization. Other valid rigging configurations are possible. A qualified professional must be consulted prior to lifting.

RIGGING DIAGRAM* **B**

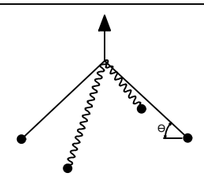

BURY DEPTH:	0.0' - 0.0' to Top		
WATER LEVEL:	5.0'	APPROX. WEIGHT:	2721.49 Lbs
DESIGN SPEC:	ACI 318,ASTM C890	LOADING SPEC:	A-8 (AASHTO H10-44)
REINFORCEMENT TYPE:	Rebar	LIFTING TYPE:	Insert

Infrastructure
JENSEN
WWW.JENSENINFRASTRUCTURE.COM

©2026 Jensen Infrastructure - All rights reserved.
All materials appearing as Jensen Infrastructure documents and the like are proprietary work product and are protected under U.S. copyright and other laws.
Unless in conjunction with business conducted with Jensen Infrastructure , any use of Jensen Infrastructure work product without express, written consent is prohibited, and recipient is prohibited from distributing any and all work product to non-approved third parties under penalty of civil action.
This product shall only be produced in a Jensen Infrastructure facility.

CHANGE HISTORY

NO.	DESCRIPTION	DATE	BY
1	INITIAL RELEASE	6/23/26	AB
2	SWAP GRATE	6/24/26	AB
3			

DESCRIPTION:
Drainage 3648x11.5 Rect. Top Section 24"C Sacramento Co Type J-1
CASTING LAYOUT

REV: A-1-1

PART NUMBER:	100001215	DRAWN BY:	A.Bi
CREATED:	8/8/2024	MODIFIED:	6/24/2026

SHEET: 1 OF 2

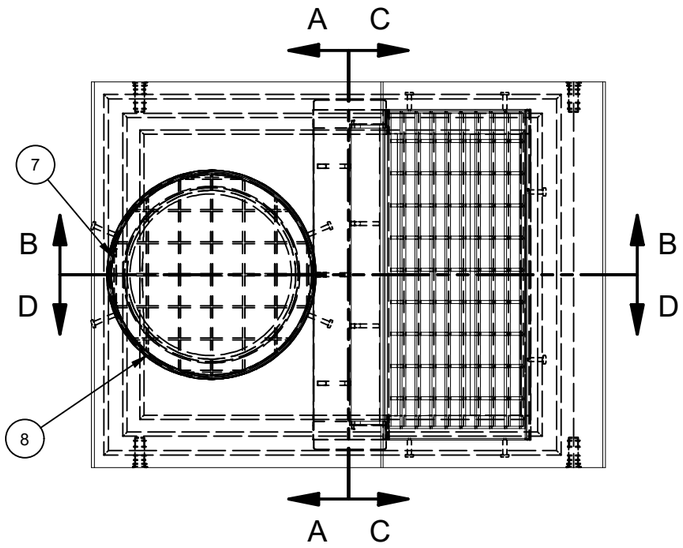

PLAN VIEW

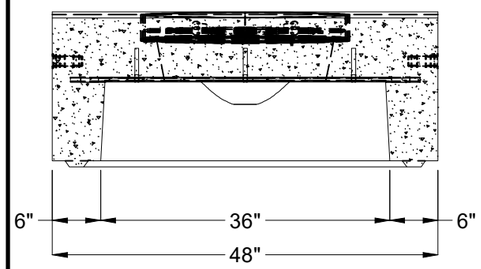

SECTION A-A

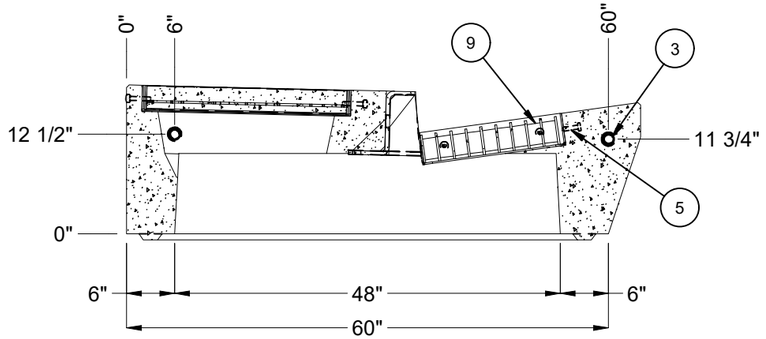

SECTION B-B



SECTION C-C

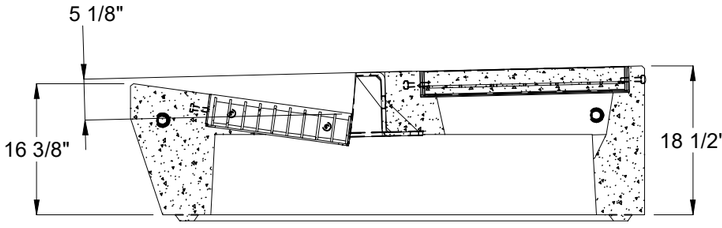

SECTION D-D

BURY DEPTH:	0.0' - 0.0' to Top		
WATER LEVEL:	5.0'	APPROX. WEIGHT:	2721.49 Lbs
DESIGN SPEC:	ACI 318,ASTM C890	LOADING SPEC:	A-8 (AASHTO H10-44)
REINFORCEMENT TYPE:	Rebar	LIFTING TYPE:	Insert

Infrastructure
JENSEN
WWW.JENSENINFRASTRUCTURE.COM

©2026 Jensen Infrastructure - All rights reserved.
All materials appearing as Jensen Infrastructure documents and the like are proprietary work product and are protected under U.S. copyright and other laws.
Unless in conjunction with business conducted with Jensen Infrastructure , any use of Jensen Infrastructure work product without express, written consent is prohibited, and recipient is prohibited from distributing any and all work product to non-approved third parties under penalty of civil action.
This product shall only be produced in a Jensen Infrastructure facility.

DESCRIPTION:	Drainage 3648x11.5 Rect. Top Section 24"C Sacramento Co Type J-1 CASTING DRAWING		REV: A-1-1
PART NUMBER:	100001215	DRAWN BY:	A.Bi
CREATED:	8/8/2024	MODIFIED:	6/24/2026

SHEET: 2 OF 2

100001215.idw